Technical description

Progressive distributors SX-5 are built in a variable disk construction. Therefore the distributors can be, depending on the number of lubrication points, extended or shortened. Because of the disk construction there is the possibility to form individual middle elements (metering elements) with different metering volumes to one complete progressive distributor.

The different metering volume per piston stroke is effected by different piston diameters.

A progressive distributor needs at least three pistons, i.e. at least three middle elements (metering elements).

Technical data

Operating pressure-inlet:	max. 300 bar
Temperature range:	-30 °C to 80 °C
Lubricant:	oil- fluid grease - grease up to NLGI-cl. 2
Revolutions:	max. 180 r/min
Material:	steel, galvanized

No. of middle elements (metering elements):

min. 3 middle elements: SX-5 3/6

max. 10 middle elements: SX-5 10/20

Dimensional drawing:

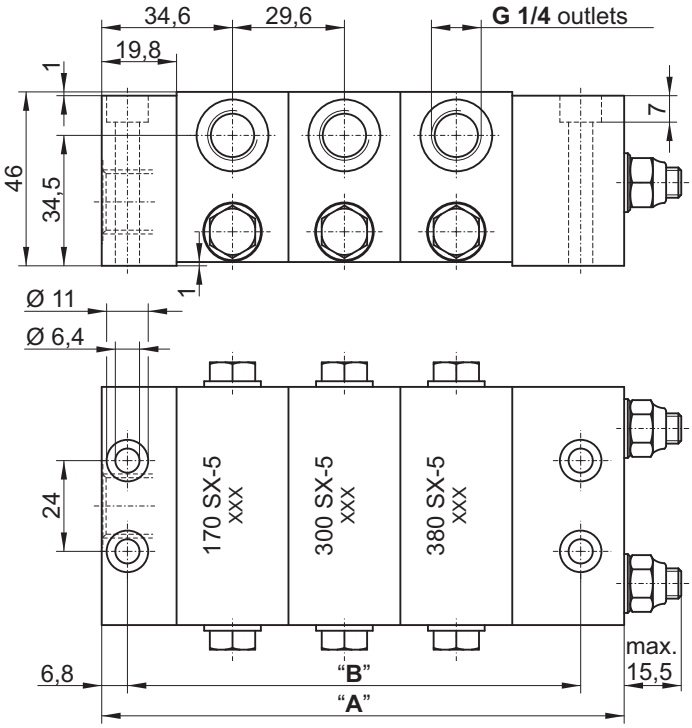

Progressive distributor SX-5 with three middle elements and six outlets

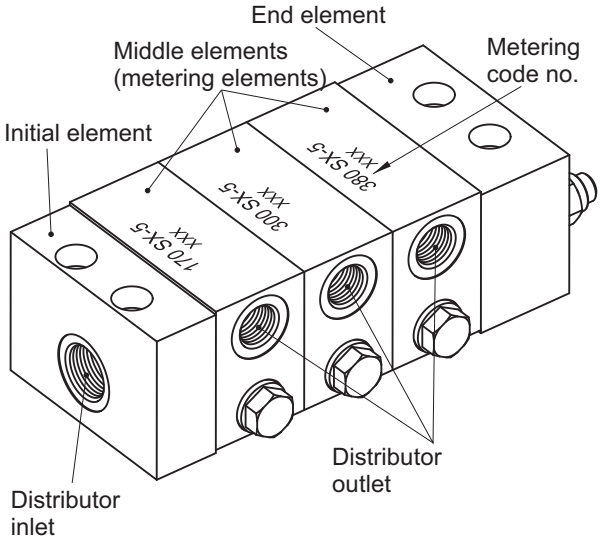

Table metering volume:

Designation middle element	Metering volume (mm³/stroke)		Code no.
	p. outlet	p. element	
075 SX-5	75	150	075
117 SX-5	117	234	117
170 SX-5	170	340	170
230 SX-5	230	460	230
300 SX-5	300	600	300
380 SX-5	380	760	380
470 SX-5	470	940	470

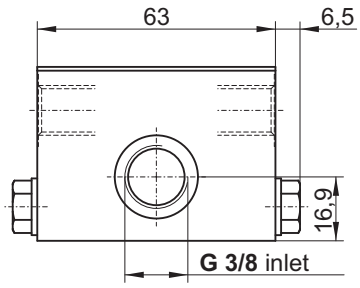

No. of middle elements	No. of outlets (max.)	Dim. "A" (mm)	Dim. "B" (mm)
3	6	138,2	119,9
4	8	167,8	149,5
5	10	197,4	179,1
6	12	227,0	208,7
7	14	256,6	238,3
8	16	286,2	267,9
9	18	315,8	297,5
10	20	345,4	327,1

© BEKA 2014 All rights reserved!

Subject to alterations!

BAIER + KÖPPEL GmbH + CO KG PRÄZISIONSAPPARATEFABRIK BEETHOVENSTR. 14 D-91257 PEGNITZ POSTFACH 1320 D-91253 PEGNITZ TEL.: +49 9241 729-0 FAX: +49 9241 729-50 WEB: www.beka-lube.de E-MAIL: beka@beka-lube.de