4KA/4KB

3, 4, 5 port pilot operated valve 4K Series Pneumatic valve metal base

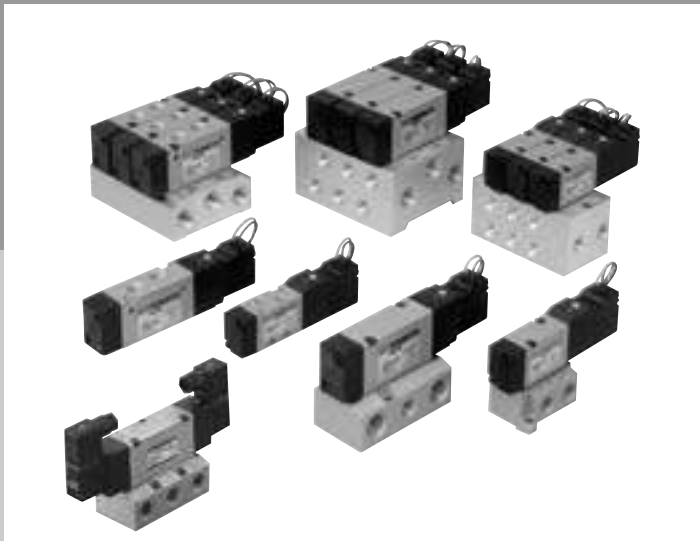

CONTENTS

Series variation 778

Variation of electric connection (electric connection method/circuit diagram) 780

⚠ Safety precautions 776

Discrete valve

● Body porting (3KA1/4KA1 to 4) 782

● Sub-plate porting (4KB1 to 4) 800

Individual wiring manifold

● Body porting (M3KA1/M4KA1 to 4) 816

● Sub-plate porting (M4KB1 to 4) 828

Technical data

(1) Pneumatics system selection guide 879

(2) How to wire terminal box wiring and connector 880

⚠ Refer to the safety precautions on Introduction and page 776 before starting use.

4KA/4KB Series

Appearance			Model no.		Position No. of solenoid JIS symbol	Valve performance: Flow characteristics C ($dm^3/(s \cdot bar)$) Note 1	Valve performance: Applicable cylinder bore size	Voltage (V)
Discrete	Body porting		3 port	3KA1	**3KA1** ● 2-position single N.C. type B b P R ● 2-position single N.O. type A b P R ● 2-position double solenoid a B b P R	0.65	ø20 to ø40	100 AC 200 AC 24 DC Option 110 AC 220 AC 12 DC
			5 port	4KA1		0.60 to 0.68		
				4KA2		2.3 to 2.9	ø40 to ø80	
				4KA3		4.1 to 5.6	ø63 to ø100	
				4KA4		8.2 to 11	ø125 to ø160	
	Sub-plate porting		5 port	4KB1	**4KA1 to 4KA4** **4KB2 to 4KB4** ● 2-position single solenoid A B b R_1 P R_2 * Only 4KB1 A B b P R	0.63 to 1.2	ø20 to ø40	
				4KB2		2.4 to 3.0	ø40 to ø80	
				4KB3		5.6 to 6.6	ø63 to ø100	
				4KB4		10 to 13	ø125 to ø160	
Metal base / Individual wiring manifold	Body porting		3 port	M3KA1	● 2-position double solenoid a A B b R_1 P R_2 * Only 4KB1 a A B b P R ● 3-position all ports closed a A B b R_1 P R_2 * Only 4KB1 a A B b P R ● 3-position A/B/R connection a A B b R_1 P R_2 * Only 4KB1 a A B b P R ● 3-position P/A/B connection a A B b R_1 P R_2 * Only 4KB1 a A B b P R	0.69	ø20 to ø40	100 AC 200 AC 24 DC Option 110 AC 220 AC 12 DC
			5 port	M4KA1		0.69 to 0.97		
				M4KA2		2.4 to 3.0	ø40 to ø80	
				M4KA3		4.1 to 5.9	ø63 to ø100	
				M4KA4		8.3 to 11	ø125 to ø160	
	Sub-plate porting		4 port	M4KB1		0.60 to 0.81	ø20 to ø40	
			5 port	M4KB2		1.8 to 2.1	ø40 to ø80	
				M4KB3		4.3 to 4.8	ø63 to ø100	
				M4KB4		8.6 to 9.4	ø125 to ø160	
Block manifold	Sub-plate porting	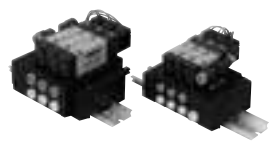	5 port	MN4KB1		0.60 to 0.80	ø20 to ø40	
				MN4KB2		2.3 to 3.1	ø40 to ø80	

Note 1: Effective sectional area S and sonic conductance C are converted as S ≒ 5.0 x C.

Solenoid position								A/B port size											Electric connection				Page
								Push-in joint					Female thread										
2-position single solenoid	2-position double solenoid	3-position all ports closed	3-position A/B/R connection	3-position P/A/B connection	2-position single solenoid N.C. type	2-position single solenoid N.O. type	Mix	ø4	ø6	ø8	ø10	ø12	M5	Rc1/8	Rc1/4	Rc3/8	Rc1/2	Female thread back porting specifications	Grommet lead wire	Small terminal box	C-connector	D-connector	
	●				●	●		●	●				●						●	●	●	●	782
●	●	●	●	●				●	●				●						●	●	●	●	
●	●	●	●	●					●	●				●					●	●	●	●	
●	●	●	●	●						●	●				●				●	●	●	●	
●	●	●	●	●							●	●				●			●	●	●	●	
●	●	●	●	●										●					●	●	●	●	800
●	●	●	●	●										●	●				●	●	●	●	
●	●	●	●	●											●	●			●	●	●	●	
●	●	●	●	●												●	●		●	●	●	●	
	●				●	●	●	●	●				●						●	●	●	●	816
●	●	●	●	●			●	●	●				●						●	●	●	●	
●	●	●	●	●			●		●	●				●					●	●	●	●	
●	●	●	●	●			●			●	●				●				●	●	●	●	
●	●	●	●	●			●				●	●				●			●	●	●	●	
●	●	●	●	●			●		●				●	●				●	●	●	●	●	828
●	●	●	●	●			●		●	●				●	●			●	●	●	●	●	
●	●	●	●	●			●			●	●				●	●		●	●	●	●	●	
●	●	●	●	●			●				●	●				●	●	●	●	●	●	●	
●	●	●	●	●			●	●	●	●									●	●	●	●	847
●	●	●	●	●			●		●	●	●								●	●	●	●	

MN3E0
MN4E0
4GA/B
M4GA/B
MN4GA/B
4GA/B (Master)
W4GA/B2
W4GB4
MN3S0
MN4S0
4TB
4L2-4/ LMF0
4SA/B0
4SA/B1
4KA/B
4F
PV5G/ CMF
PV5/ CMF
3MA/B0
3PA/B
P/M/B
NP/NAP/ NVP
4F*0E
HMV
HSV
2QV
3QV
SKH
PCD/ FS/FD
Ending

Electric connection

Blank — Grommet lead wire

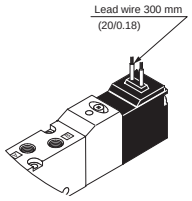

C2 — C-connector with lead wire with surge suppressor/light

●Lead wire length
C2 : 300 mm
C20 : 500 mm
C21 : 1000 mm
C22 : 2000 mm
C23 : 3000 mm

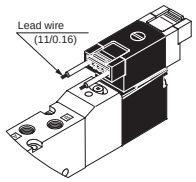

B — Small terminal box, w/o lead wire

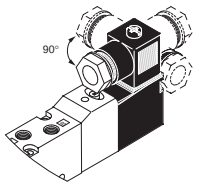

* 4K$^{A}_{B}$3 and 4K$^{A}_{B}$4 only rotate 180°.

C3 — C-connector, w/o lead wire with surge suppressor/light

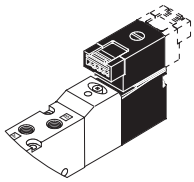

L (L2) — Small terminal box with indicator light

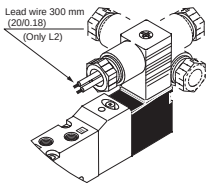

* 4K$^{A}_{B}$3 and 4K$^{A}_{B}$4 only rotate 180°.

D — D-connector with lead wire

●Lead wire length
D : 300 mm
D00 : 500 mm
D01 : 1000 mm
D02 : 2000 mm
D03 : 3000 mm

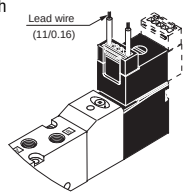

LS — Small terminal box with surge suppressor/light

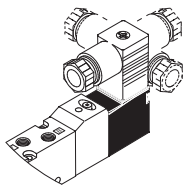

* 4K$^{A}_{B}$3 and 4K$^{A}_{B}$4 only rotate 180°.

D1 — D-connector, w/o lead wire

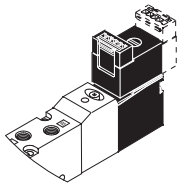

C — C-connector with lead wire

●Lead wire length
C : 300 mm
C00 : 500 mm
C01 : 1000 mm
C02 : 2000 mm
C03 : 3000 mm

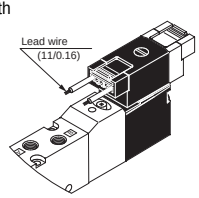

D2 — D-connector with lead wire with surge suppressor/light

●Lead wire length
D2 : 300 mm
D20 : 500 mm
D21 : 1000 mm
D22 : 2000 mm
D23 : 3000 mm

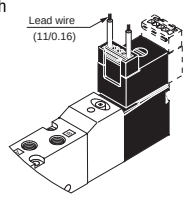

C1 — C-connector, w/o lead wire

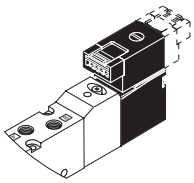

D3 — D-connector, w/o lead wire with surge suppressor/light

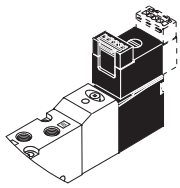

Manual override

Blank — Non-locking

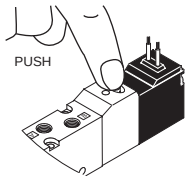

*: Operates while held down.

M1 — Locking

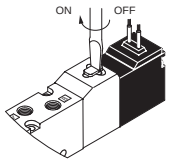

*: Operates in the ON direction. This should normally be set to the OFF side.

Other options

S — With surge suppressor

AC, DC (other than grommet lead wire type)

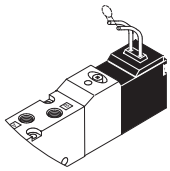

DC (only grommet lead wire)

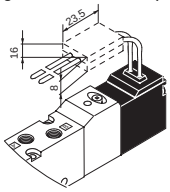

(Suppression connector type)

P — Mounting plate

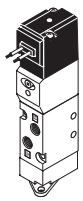

K — External pilot

When using at low pressure of 0.15 MPa or less lower than the minimum working pressure, use the following external pilot. Note that the PA port must be pressurized.

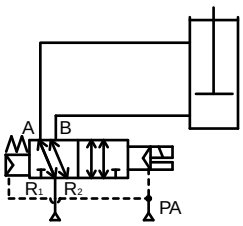

PA: 0.2 MPa and over

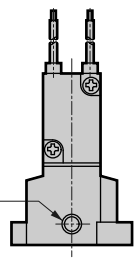

Electric connection circuit diagram

Voltage type	Option	Electric wire circuit diagram	Wiring method
AC	-	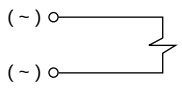	Grommet lead wire Terminal box (B) C-connector (C, C0*, C1) D-connector (D, D0*, D1)
	With indicator light	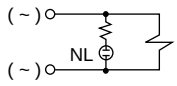	Terminal box (L, L2)
	With surge suppressor and indicator light	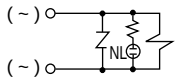 Variable resistor	Terminal box (LS) C-connector (C2, C2*, C3) D-connector (D2, D2*, D3)
	With surge suppressor (Option)	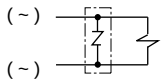 Variable resistor	Surge suppressor attached (S)
DC	-	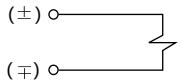	Grommet lead wire Terminal box (B) C-connector (C, C0*, C1) D-connector (D, D0*, D1)
	With indicator light	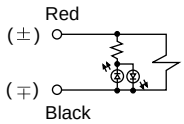	Terminal box (L, L2) For 4KA/B1, 4KA/B2, surge suppressor / indicator light is provided.
	With surge suppressor and indicator light	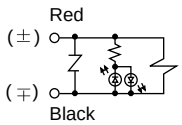 Variable resistor	Terminal box (LS) C-connector (C2, C2*, C3) D-connector (D2, D2*, D3)
	With surge suppressor (Option)	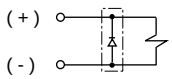 Diode *A diode has polarity.	Grommet lead wire (24 VDC or less) Surge suppressor attached (S)
		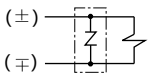 Variable resistor * The varistor does not have polarity.	Surge suppressor attached (S)

Discrete valve body porting

3, 5 port pilot operated valve pneumatic valve

3KA1, 4KA1/2/3/4 Series

● Applicable cylinder bore size: ø20 to ø160

Refer to Intro 17 for details.

JIS symbol

● 3 port valve
2-position single N.C. type

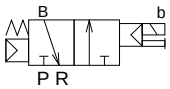

● 3 port valve
2-position single N.O. type

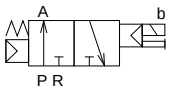

● 3 port valve
2-position double solenoid

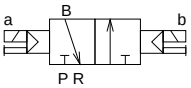

● 5 port valve
2-position single solenoid

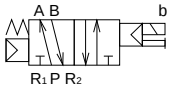

● 5 port valve
2-position double solenoid

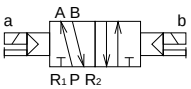

● 5 port valve
3-position all ports closed

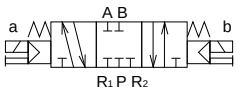

● 5 port valve
3-position A/B/R connection

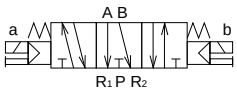

● 5 port valve
3-position P/A/B connection

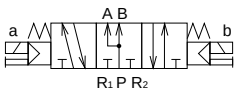

Common specifications

Descriptions	
Type of valve/operation method	Pilot operated soft spool valve
Working fluid	Compressed air
Max. working pressure MPa	0.70
Min. working pressure MPa	Refer to the following individual specifications.
Withstanding pressure MPa	1.05
Ambient temperature °C	-5 to 50 (no freezing)
Fluid temperature °C	5 to 50
Lubrication	Not required
Protective structure	Dust proof
Vibration/impact m/s²	50 or less / 300 or less
Working environment	Containing corrosive gas is impermissible.

Electric specifications

Descriptions			3KA1, 4KA1/2	4KA3/4
Rated voltage V	AC		100, 200 (50/60 Hz)	
	DC		24	
Rated voltage fluctuation range			±10%	
Starting current A	AC	100 V	0.056/0.044	0.046/0.042
	AC	200 V	0.028/0.022	0.023/0.021
	DC	24 V	———	
Holding current A	AC	100 V	0.028/0.022	0.023/0.021
	AC	200 V	0.014/0.011	
	DC	24 V	0.075	
Power consumption W Value in ( ) are with indicator light	AC	100 V	1.8 / 1.4 (1.8 / 1.5)	1.6 / 1.3 (1.8 / 1.5)
	AC	200 V	1.8 / 1.4 (1.8 / 1.5)	1.6 / 1.3 (1.8 / 1.5)
	DC	24 V	1.8 (2.0)	
Heat proof class			B (molded coil)	
Temperature rise °C			43	30

Remarks: The 100 VAC 50/60 Hz rated voltage can be used at 110 VAC 60 Hz, and 200 VAC 50/60 Hz can be used at 220 VAC 60 Hz.

Individual specifications

Descriptions			3KA1	4KA1	4KA2	4KA3	4KA4
Min. working pressure MPa	2-position	Single solenoid	0.15	0.15	0.15	0.15	0.15
		Double solenoid			0.10	0.10	0.10
	3-position		-	0.20	0.20	0.20	0.20
Port size Note 1	P/A/B port		M5 Push-in joint ø4, ø6	M5 Push-in joint ø4, ø6	Rc1/8 Push-in joint ø6, ø8	Rc1/4 Push-in joint ø8, ø10	Rc3/8 Push-in joint ø10, ø12
	R1/R2 port		M5	M5	Rc1/8	Rc1/4	Rc3/8
Response time Note 2 ms	2-position		30 or less	30 or less	30 or less	30 or less	30 or less
	3-position		-	60 or less	60 or less	60 or less	60 or less
Weight g	2-position	Single solenoid	70	70	115	214	325
		Double solenoid	110	110	155	315	435
	3-position		-	120	170	354	505

Note 1: G threads and NPT threads are available for the piping port threads. Contact CKD for information.
Note 2: Response time is the value when supply pressure 0.5 MPa, not lubricated and ON. The value varies depending on pressure and quality of lubricant.

Flow characteristics

Model no.	Solenoid position		C (dm^3/ (s·bar))	b
3KA1	2-position		0.65	0.37
4KA1	2-position		0.65	0.37
	3-position	All ports closed	0.60	0.32
		A/B/R connection	0.68	0.39
		P/A/B connection	0.61	0.36
4KA2	2-position		2.6	0.43
	3-position	All ports closed	2.3	0.43
		A/B/R connection	2.9	0.34
		P/A/B connection	2.3	0.42
4KA3	2-position		5.6	0.49
	3-position	All ports closed	4.1	0.60
		A/B/R connection	4.1	0.62
		P/A/B connection	4.2	0.68
4KA4	2-position		9.8	0.49
	3-position	All ports closed	8.2	0.54
		A/B/R connection	11	0.50
		P/A/B connection	8.4	0.54

Note 1: Effective sectional area S and sonic conductance C are converted as S ≒ 5.0 x C.
Flow characteristics are the value when port size is M5 (3KA1, 4KA1), Rc1/8 (4KA2), Rc1/4 (4KA3) and Rc3/8 (4KA4).

Ozone proof specifications (Ending 5)

** - Voltage - P11

Coolant proof specifications

● Special structure with excellent oil proof and water proof properties

** - A - Voltage

Copper and PTFE free

● Copper and PTFE material not used for flow path

** - Voltage - P6

3KA1/4KA1 to 4 Series

Discrete valve: Body porting

How to order

4KA2 1 0 - 06 - M1 B ( ) - AC100V

- Ⓐ Model no.
- Ⓑ Solenoid position
- Ⓒ Port size
- Ⓓ Manual override
- Ⓔ Electric connection
  * Refer to page 781 for the circuit diagram of the type with surge suppressor and light.
- Ⓕ Other options
- Ⓖ Voltage

Symbol		Descriptions	Ⓐ Model no. 3KA1	4KA1	4KA2	4KA3	4KA4
Ⓑ Solenoid position	1	2-position single solenoid		●	●	●	●
	2	2-position double solenoid	●	●	●	●	●
	3	3-position all ports closed		●	●	●	●
	4	3-position A/B/R connection		●	●	●	●
	5	3-position P/A/B connection		●	●	●	●
	1	2-position single solenoid normally closed	●				
	11	2-position single solenoid normally open	●				
Ⓒ Port size	Port	P/A/B port	R1/R2 port (1) = M5 (2) = Rc1/8 (3) = Rc1/4 (4) = Rc3/8				
	M5	M5	(1)	(1)			
	06	Rc1/8			(2)		
	08	Rc1/4				(3)	
	10	Rc3/8					(4)
	GS4	ø4 push-in joint	(1)	(1)			
	GS6	ø6 push-in joint	(1)	(1)	(2)		
	GS8	ø8 push-in joint			(2)	(3)	
	GS10	ø10 push-in joint				(3)	(4)
	GS12	ø12 push-in joint					(4)
Ⓓ	Blank	Non-locking manual override	●	●	●	●	●
	M1	Locking manual override	●	●	●	●	●
Ⓔ Electric connection		Grommet lead wire					
	Blank	Grommet lead wire (300 mm)	●	●	●	●	●
		Small terminal box					
	B	No lead wire	●	●	●	●	●
	L	No lead wire	Refer to <Table 1> on the left. Note 1				
	L2	Lead wire length (300 mm)					
	LS	No lead wire with surge suppressor/light					
		C-connector (lead wire lateral)					
	C	Lead wire length (300 mm)	●	●	●	●	●
	C00	Lead wire length (500 mm)	●	●	●	●	●
	C01	Lead wire length (1000 mm)	●	●	●	●	●
	C02	Lead wire length (2000 mm)	●	●	●	●	●
	C03	Lead wire length (3000 mm)	●	●	●	●	●
	C1	No lead wire	●	●	●	●	●
	C2	Lead wire length (300 mm) with surge suppressor/light	●	●	●	●	●
	C20	Lead wire length (500 mm) with surge suppressor/light	●	●	●	●	●
	C21	Lead wire length (1000 mm) with surge suppressor/light	●	●	●	●	●
	C22	Lead wire length (2000 mm) with surge suppressor/light	●	●	●	●	●
	C23	Lead wire length (3000 mm) with surge suppressor/light	●	●	●	●	●
	C3	No lead wire with surge suppressor/light	●	●	●	●	●
		D-connector (lead wire upward)					
	D	Lead wire length (300 mm)	●	●	●	●	●
	D00	Lead wire length (500 mm)	●	●	●	●	●
	D01	Lead wire length (1000 mm)	●	●	●	●	●
	D02	Lead wire length (2000 mm)	●	●	●	●	●
	D03	Lead wire length (3000 mm)	●	●	●	●	●
	D1	No lead wire	●	●	●	●	●
	D2	Lead wire length (300 mm) with surge suppressor/light	●	●	●	●	●
	D20	Lead wire length (500 mm) with surge suppressor/light	●	●	●	●	●
	D21	Lead wire length (1000 mm) with surge suppressor/light	●	●	●	●	●
	D22	Lead wire length (2000 mm) with surge suppressor/light	●	●	●	●	●
	D23	Lead wire length (3000 mm) with surge suppressor/light	●	●	●	●	●
	D3	No lead wire with surge suppressor/light	●	●	●	●	●
Ⓕ	Blank	No option	●	●	●	●	●
	P	Mounting plate (only 2-position single solenoid)	●	●	●	●	●
	S	Surge suppressor attached Note 2	●	●	●	●	●
Ⓖ Voltage	AC100V	100 VAC 50/60Hz (Standard)	●	●	●	●	●
	AC200V	200 VAC 50/60Hz (Standard)	●	●	●	●	●
	DC24V	24 VDC (Standard)	●	●	●	●	●
	AC110V	110 VAC 50/60Hz (Option)	●	●	●	●	●
	AC220V	220 VAC 50/60Hz (Option)	●	●	●	●	●
	DC12V	12 VDC (Option)	●	●	●	●	●

<Table 1> Small terminal box L/L2/LS table

Symbol	Descriptions			3KA1	4KA1	4KA2	4KA3	4KA4	Surge suppressor
L	No lead wire	With light	AC	●	●	●	●	●	
			DC				●	●	
		With surge suppressor/light	AC						
			DC	●	●	●			Integrated
L2	With lead wire (300 mm)	With light	AC	●	●	●			
			DC						
		With surge suppressor/light	AC						
			DC	●	●	●			Integrated
LS	No lead wire	With surge suppressor/light	AC	●	●	●	●	●	Integrated
			DC				●	●	Integrated

Note on model no. selection

Note 1: 3KA1, 4KA1 and 4KA2 compact terminal box, L and L2 DC voltage, and LS have a built-in surge absorber.

Note 2: With a 24 VDC or less grommet lead wire, the enclosed surge suppressor is a suppression connector. (Refer to page 780)

<Example of model number>

4KA210-06-M1BP-AC100V

- Ⓐ Model : 4KA2
- Ⓑ Solenoid position: 2-position single solenoid
- Ⓒ Port size : Rc1/8
- Ⓓ Manual override : Locking manual override
- Ⓔ Electric connection : Small terminal box, w/o lead wire
- Ⓕ Other options : Mounting plate
- Ⓖ Voltage : 100 VAC 50/60Hz

MEMO

MN3E0 MN4E0
4GA/B
M4GA/B
MN4GA/B
4GA/B (Master)
W4GA/B2
W4GB4
MN3S0 MN4S0
4TB
4L2-4/ LMF0
4SA/B0
4SA/B1
4KA/B
4F
PV5G/ CMF
PV5/ CMF
3MA/B0
3PA/B
P/M/B
NP/NAP/ NVP
4F*0E
HMV HSV
2QV 3QV
SKH
PCD/ FS/FD
Ending

Internal structure and parts list

4KA110

● 2-position single solenoid

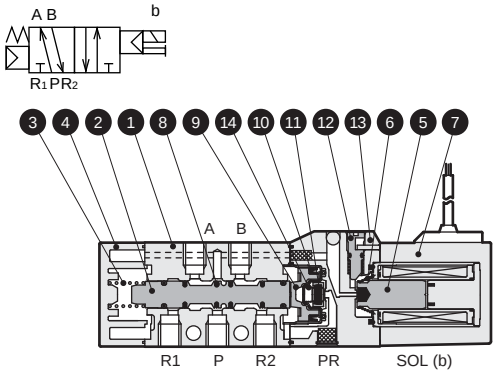

3KA110-NC

● 2-position single solenoid / N.C. type

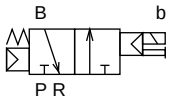

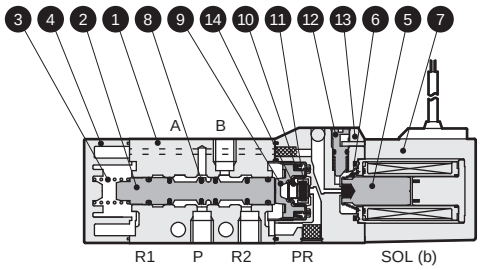

4KA120

● 2-position double solenoid

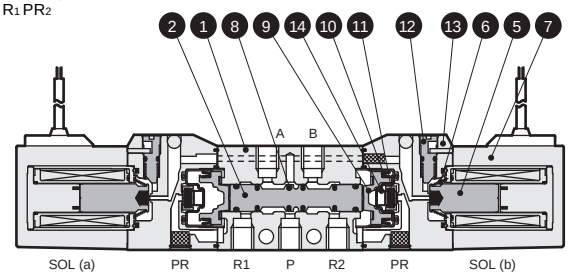

3KA1110-NO

● 2-position single solenoid / N.O. type

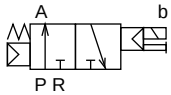

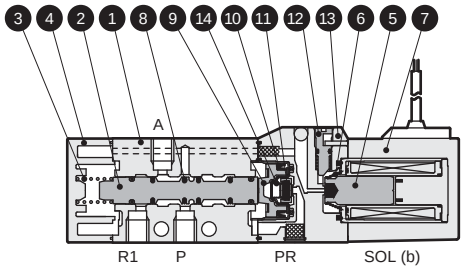

4KA130

● 3-position all ports closed

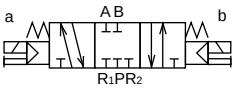

4KA140

● 3-position A/B/R connection

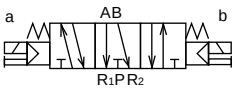

4KA150

● 3-position P/A/B connection

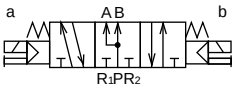

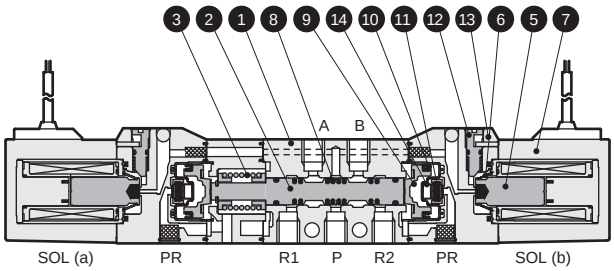

Main parts list

No.	Parts name	Material
1	Body	Aluminum alloy die-casting
2	Valving element (spool)	Aluminum
3	Valve spring	Stainless steel
4	Cap	Resin
5	Plunger	-
6	Plunger spring	-
7	Coil assembly	-
8	Spool packing seal	Nitrile rubber
9	Piston	Resin
10	Piston packing seal	Nitrile rubber
11	Valve seat	Nitrile rubber
12	Manual button	Resin
13	Pilot operated valve	Resin
14	Valve seat spring	Stainless steel

Repair parts list

No. / parts name / Model no.	2 8 Spool assembly	9 10 Piston assembly	5 6 7 Coil assembly *
3KA110 3KA1110	4K9-110	4K9-151	4K1L- E Electric connection option symbol - Blank for grommet lead wire COIL- G Voltage
3KA120	4K9-118		
4KA110	4K9-110	4K9-151	
4KA120	4K9-118		
4KA130	4K9-111	4K9-152	
4KA140	4K9-112		
4KA150	4K9-113		

* Options satisfying the model selection are assembled or enclosed with the coil assembly compact terminal box and connector.

Internal structure and parts list

4KA210

● 2-position single solenoid

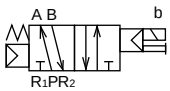

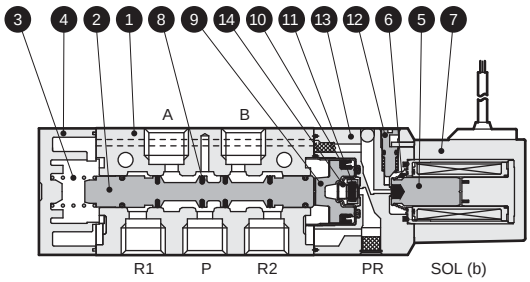

4KA220

● 2-position double solenoid

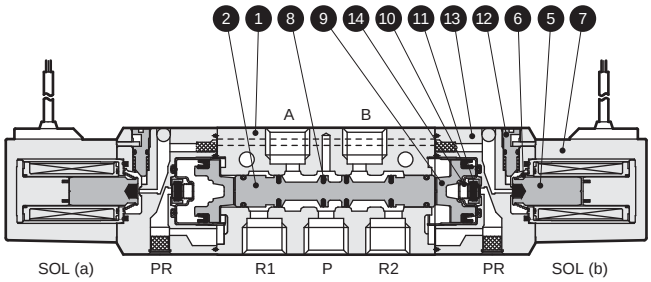

4KA230

● 3-position all ports closed

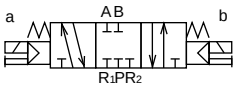

4KA240

● 3-position A/B/R connection

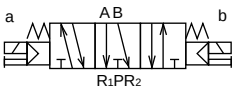

4KA250

● 3-position P/A/B connection

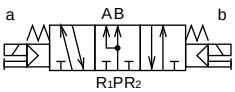

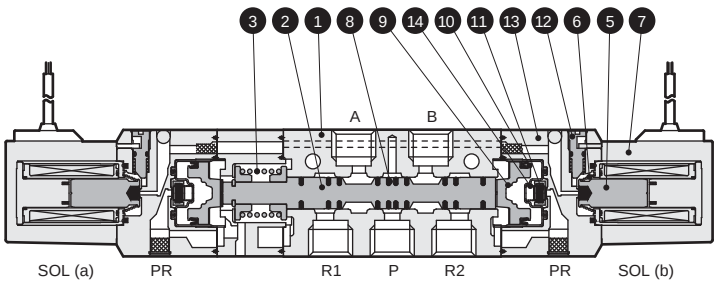

Main parts list

No.	Parts name	Material
1	Body	Aluminum alloy die-casting
2	Valving element (spool)	Aluminum
3	Valve spring	Stainless steel
4	Cap	Resin
5	Plunger	-
6	Plunger spring	-
7	Coil assembly	-
8	Spool packing seal	Nitrile rubber
9	Piston	Resin
10	Piston packing seal	Nitrile rubber
11	Valve seat	Nitrile rubber
12	Manual button	Resin
13	Pilot operated valve	Resin
14	Valve seat spring	Stainless steel

Repair parts list

No. / parts name	2 8	9 10	5 6 7
Model no.	Spool assembly	Piston assembly	Coil assembly *
4KA210	4K9-150	4K9-153	4K1L- Ⓔ Electric connection option symbol - Blank for grommet lead wire COIL- Ⓖ Voltage
4KA220	4K9-126		
4KA230	4K9-127	4K9-154	
4KA240	4K9-128		
4KA250	4K9-129		

* Options satisfying the model selection are assembled or enclosed with the coil assembly compact terminal box and connector.

MN3E0 MN4E0
4GA/B
M4GA/B
MN4GA/B
4GA/B (Master)
W4GA/B2
W4GB4
MN3S0 MN4S0
4TB
4L2-4/ LMF0
4SA/B0
4SA/B1
4KA/B
4F
PV5G/ CMF
PV5/ CMF
3MA/B0
3PA/B
P/M/B
NP/NAP/ NVP
4F*0E
HMV HSV
2QV 3QV
SKH
PCD/ FS/FD
Ending

Internal structure and parts list

4KA310

●2-position single solenoid

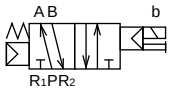

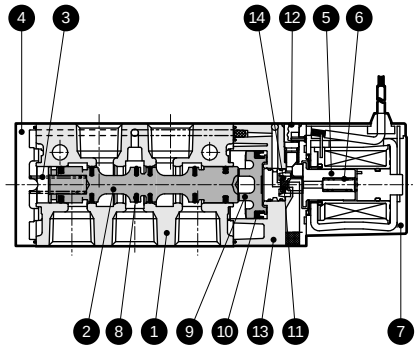

4KA320

●2-position double solenoid

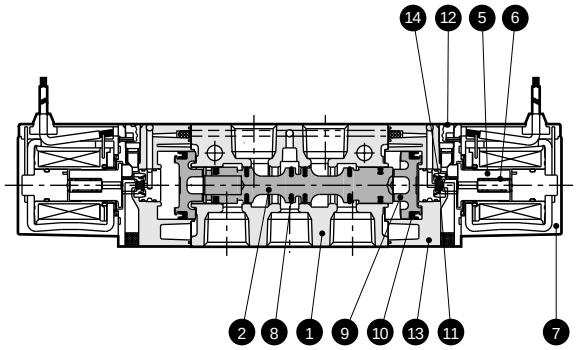

4KA330

●3-position all ports closed

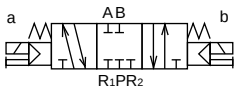

4KA340

●3-position A/B/R connection

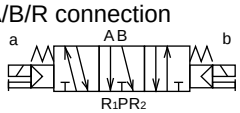

4KA350

●3-position P/A/B connection

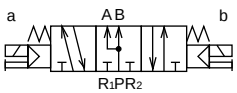

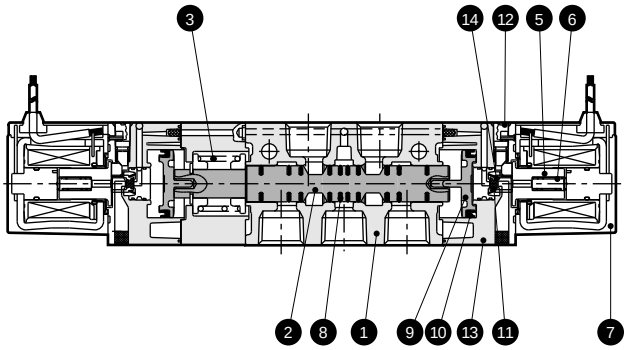

Main parts list

No.	Parts name	Material
1	Body	Aluminum alloy die-casting
2	Valving element (spool)	Aluminum
3	Valve spring	Stainless steel
4	Cap	Resin
5	Plunger	-
6	Plunger spring	-
7	Coil assembly	-
8	Spool packing seal	Nitrile rubber
9	Piston	Resin
10	Piston packing seal	Nitrile rubber
11	Valve seat	Nitrile rubber
12	Manual button	Resin
13	Pilot operated valve	Resin
14	Valve seat spring	Stainless steel

Repair parts list

No. / parts name / Model no.	2 8 Spool assembly	9 10 Piston assembly	5 6 7 Coil assembly *
4KA310	4K9-133	4K9-137	4K3- Ⓔ Electric connection option symbol- Blank for grommet lead wire COIL- Ⓖ Voltage
4KA320			
4KA330	4K9-134	4K9-138	
4KA340	4K9-135		
4KA350	4K9-136		

* Options satisfying the model selection are assembled or enclosed with the coil assembly compact terminal box and connector.

Internal structure and parts list

4KA410

● 2-position single solenoid

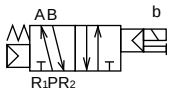

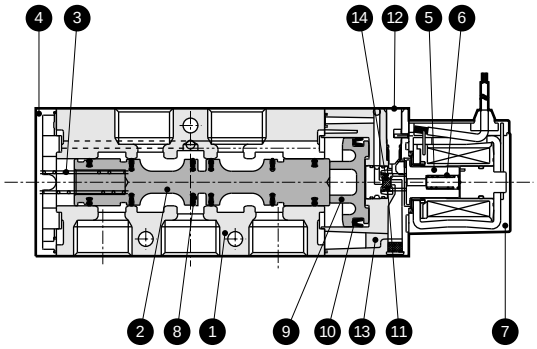

4KA420

● 2-position double solenoid

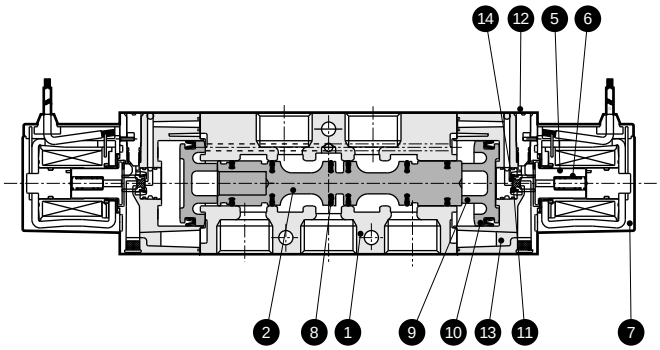

4KA430

● 3-position all ports closed

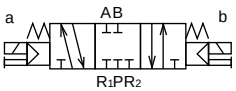

4KA440

● 3-position A/B/R connection

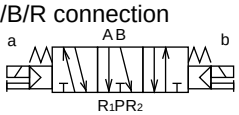

4KA450

● 3-position P/A/B connection

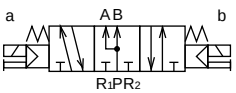

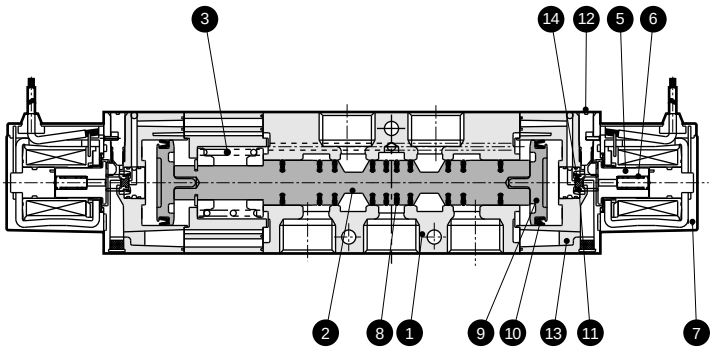

Main parts list

No.	Parts name	Material
1	Body	Aluminum alloy die-casting
2	Valving element (spool)	Aluminum
3	Valve spring	Stainless steel
4	Cap	Resin
5	Plunger	-
6	Plunger spring	-
7	Coil assembly	-
8	Spool packing seal	Nitrile rubber
9	Piston	Resin
10	Piston packing seal	Nitrile rubber
11	Valve seat	Nitrile rubber
12	Manual button	Resin
13	Pilot operated valve	Resin
14	Valve seat spring	Stainless steel

Repair parts list

No. / parts name	2 8	9 10	5 6 7
Model no.	Spool assembly	Piston assembly	Coil assembly *
4KA410	4K9-140	4K9-144	4K3- Ⓔ Electric connection option symbol- Blank for grommet lead wire COIL- Ⓖ Voltage
4KA420			
4KA430	4K9-141	4K9-145	
4KA440	4K9-142		
4KA450	4K9-143		

* Options satisfying the model selection are assembled or enclosed with the coil assembly compact terminal box and connector.

MN3E0 MN4E0
4GA/B
M4GA/B
MN4GA/B
4GA/B (Master)
W4GA/B2
W4GB4
MN3S0 MN4S0
4TB
4L2-4/ LMF0
4SA/B0
4SA/B1
4KA/B
4F
PV5G/ CMF
PV5/ CMF
3MA/B0
3PA/B
P/M/B
NP/NAP/ NVP
4F*0E
HMV HSV
2QV 3QV
SKH
PCD/ FS/FD
Ending

Dimensions

3KA110

CAD

● 2-position single N.C. type: Grommet lead wire

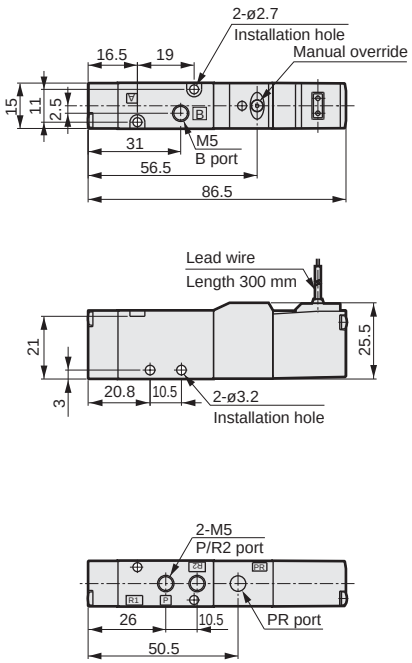

3KA1110

CAD

● 2-position single N.O. type: Grommet lead wire

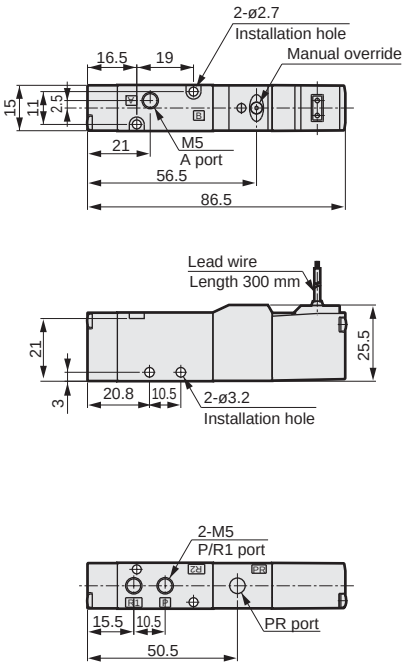

● Mounting plate: (P <Only 2-position single solenoid>)

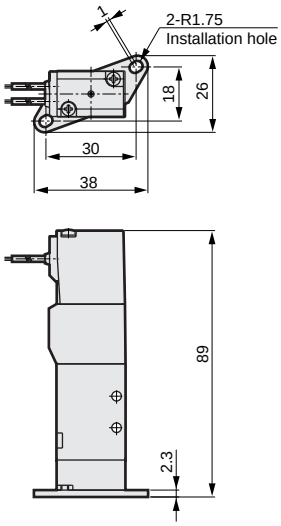

3KA120

CAD

● 2-position double N.C. type: Grommet lead wire

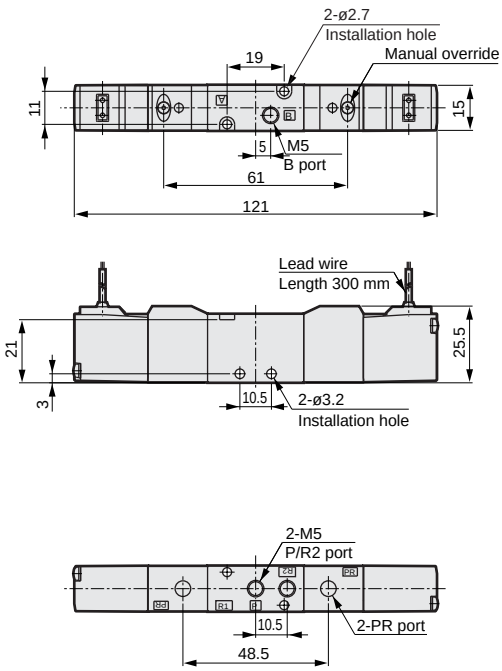

Dimensions

● ø4/ø6 push-in joint: (GS4, GS6)

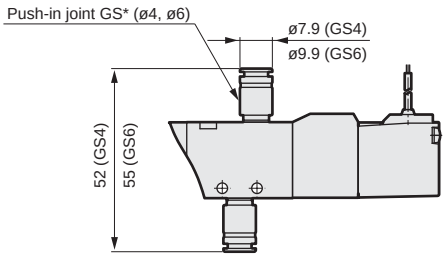

● Small terminal box: (B <without indicator light> , L, L2, LS <with indicator light>)

Without indicator light

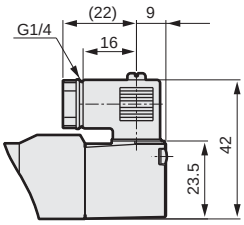

With indicator light

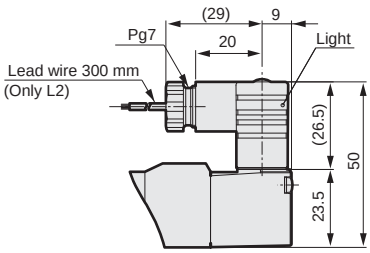

● C-connector: (C, C1, C0*, C2, C2*, C3)

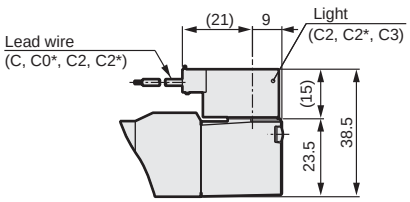

● D-connector: (D, D1, D0*, D2, D2*, D3)

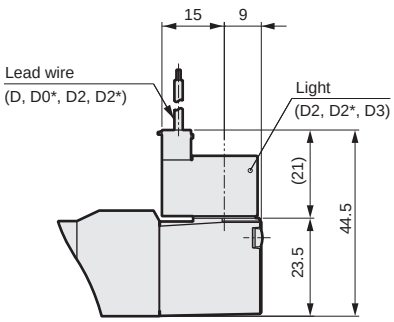

MN3E0 MN4E0
4GA/B
M4GA/B
MN4GA/B
4GA/B (Master)
W4GA/B2
W4GB4
MN3S0 MN4S0
4TB
4L2-4/ LMF0
4SA/B0
4SA/B1
4KA/B
4F
PV5G/ CMF
PV5/ CMF
3MA/B0
3PA/B
P/M/B
NP/NAP/ NVP
4F*0E
HMV HSV
2QV 3QV
SKH
PCD/ FS/FD
Ending

Dimensions

4KA110

CAD

● 2-position single solenoid: Grommet lead wire

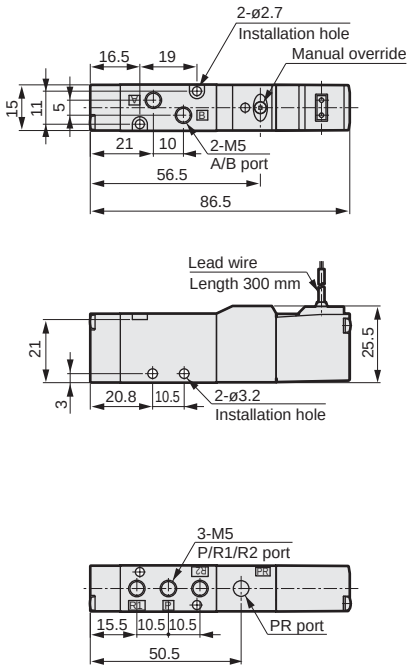

4KA120

CAD

● 2-position double solenoid: Grommet lead wire

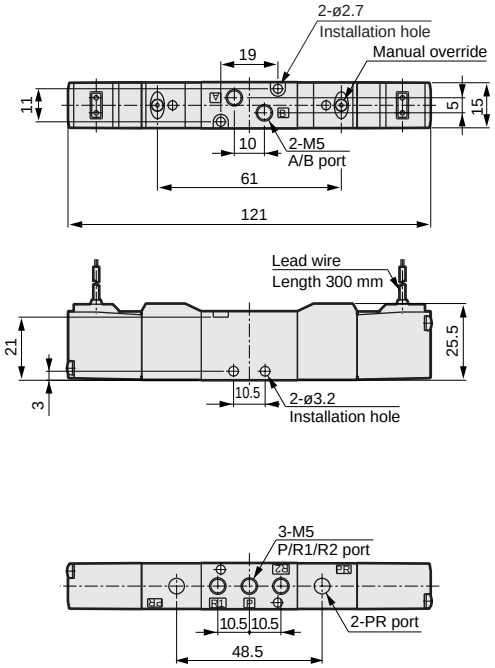

● Mounting plate: (P <Only 2-position single solenoid>)

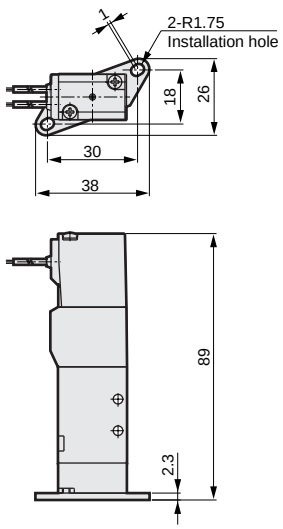

4KA1 3/4/5 0

CAD

● 3-position: Grommet lead wire

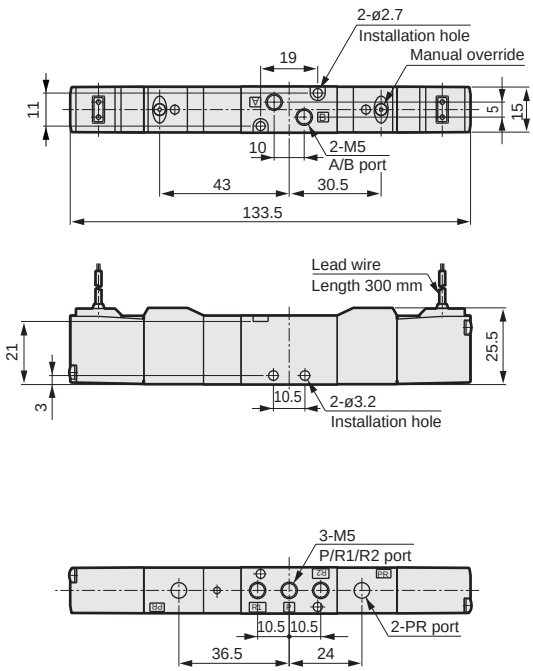

Dimensions

● ø4/ø6 push-in joint: (GS4, GS6)

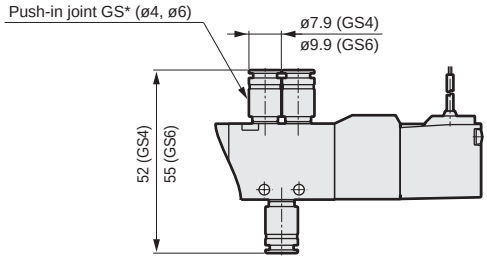

● Small terminal box: (B <without indicator light> , L, L2, LS <with indicator light>)

Without indicator light

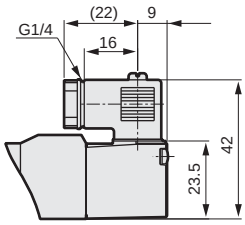

With indicator light

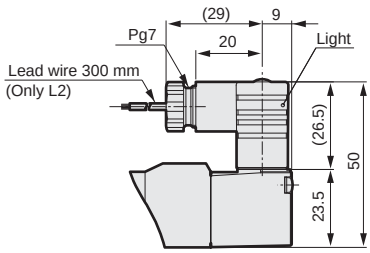

● C-connector: (C, C1, C0*, C2, C2*, C3)

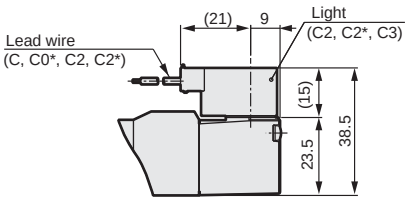

● D-connector: (D, D1, D0*, D2, D2*, D3)

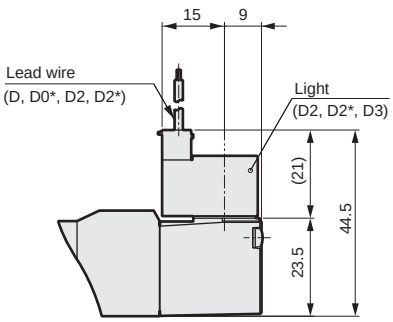

MN3E0 MN4E0
4GA/B
M4GA/B
MN4GA/B
4GA/B (Master)
W4GA/B2
W4GB4
MN3S0 MN4S0
4TB
4L2-4/ LMF0
4SA/B0
4SA/B1
4KA/B
4F
PV5G/ CMF
PV5/ CMF
3MA/B0
3PA/B
P/M/B
NP/NAP/ NVP
4F*0E
HMV HSV
2QV 3QV
SKH
PCD/ FS/FD
Ending

Dimensions

4KA210 CAD

● 2-position single solenoid: Grommet lead wire

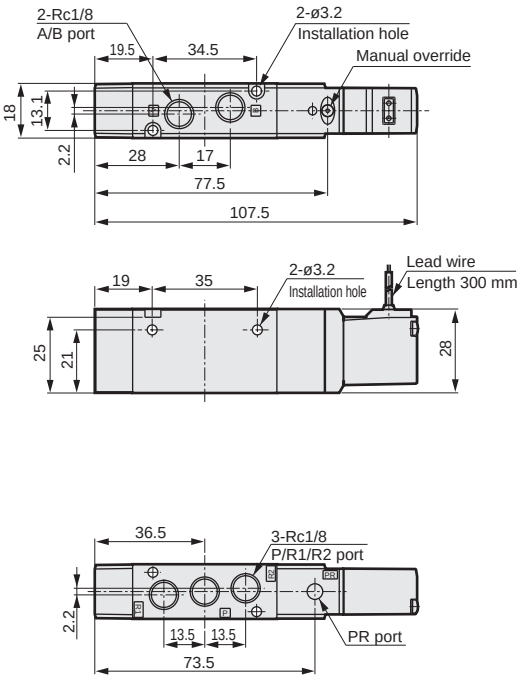

● Mounting plate: (P <Only 2-position single solenoid>)

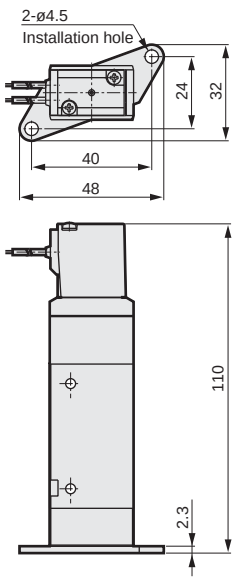

4KA220 CAD

● 2-position double solenoid: Grommet lead wire

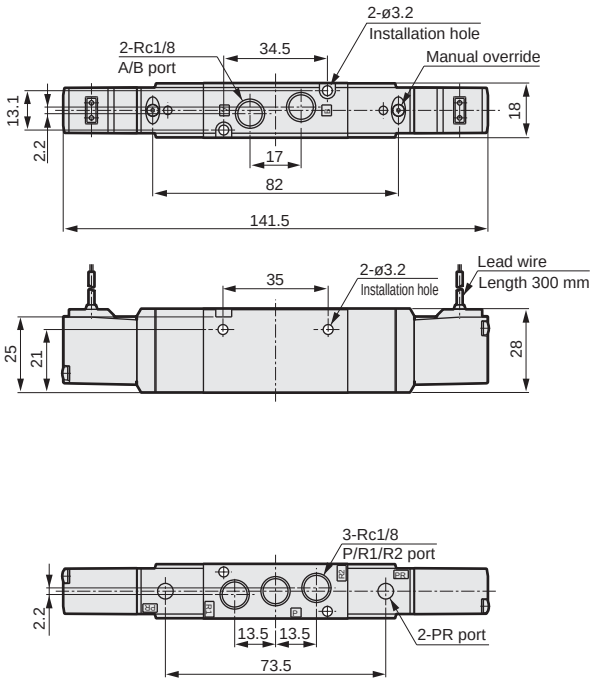

4KA2$^{3}_{4}$$^{0}_{5}$ CAD

● 3-position: Grommet lead wire

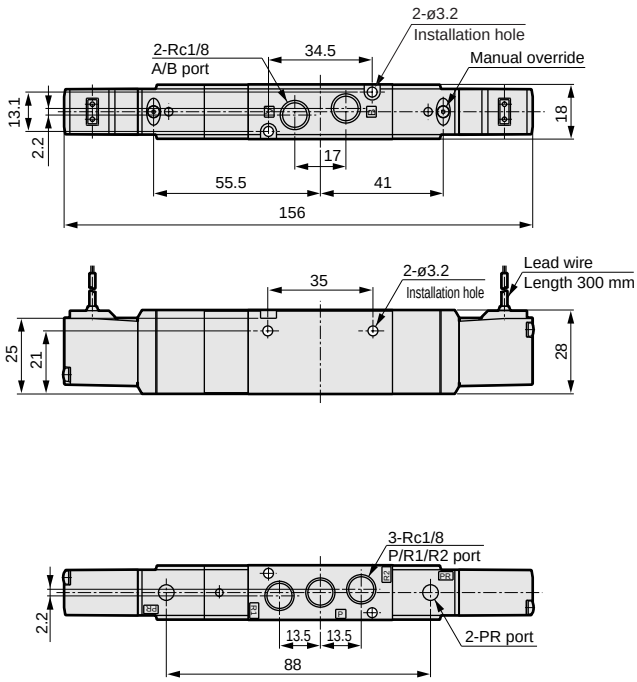

Dimensions

● ø6/ø8 push-in joint: (GS6, GS8)

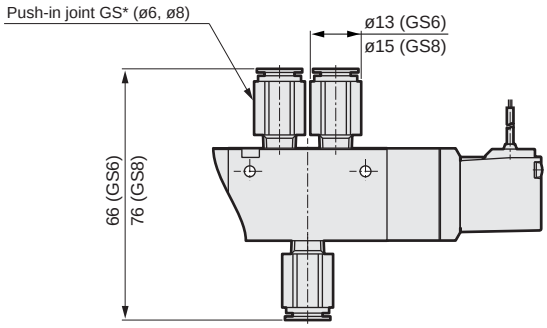

● Small terminal box: (B <without indicator light> , L, L2, LS <with indicator light>)

Without indicator light

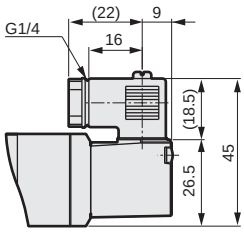

With indicator light

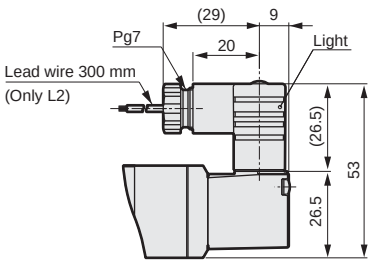

● C-connector: (C, C1, C0*, C2, C2*, C3)

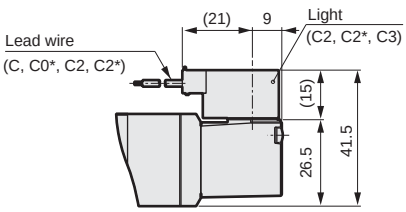

● D-connector: (D, D1, D0*, D2, D2*, D3)

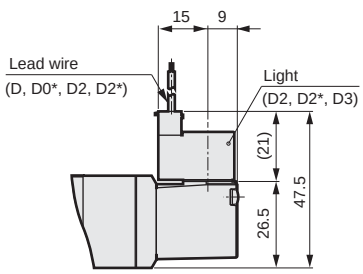

MN3E0 MN4E0
4GA/B
M4GA/B
MN4GA/B
4GA/B (Master)
W4GA/B2
W4GB4
MN3S0 MN4S0
4TB
4L2-4/ LMF0
4SA/B0
4SA/B1
4KA/B
4F
PV5G/ CMF
PV5/ CMF
3MA/B0
3PA/B
P/M/B
NP/NAP/ NVP
4F*0E
HMV HSV
2QV 3QV
SKH
PCD/ FS/FD
Ending

Dimensions

4KA310

CAD

● 2-position single solenoid: Grommet lead wire

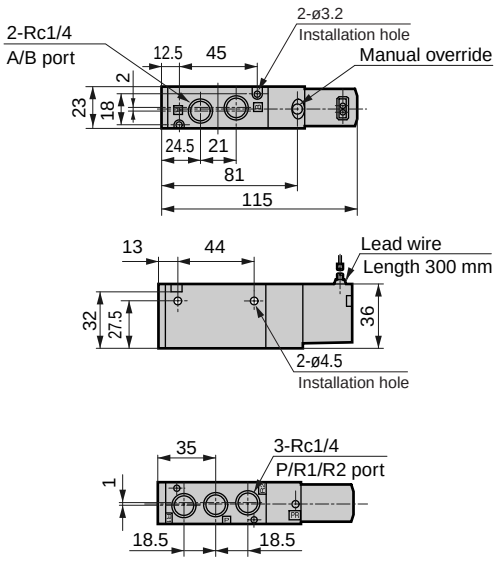

4KA320

CAD

● 2-position double solenoid: Grommet lead wire

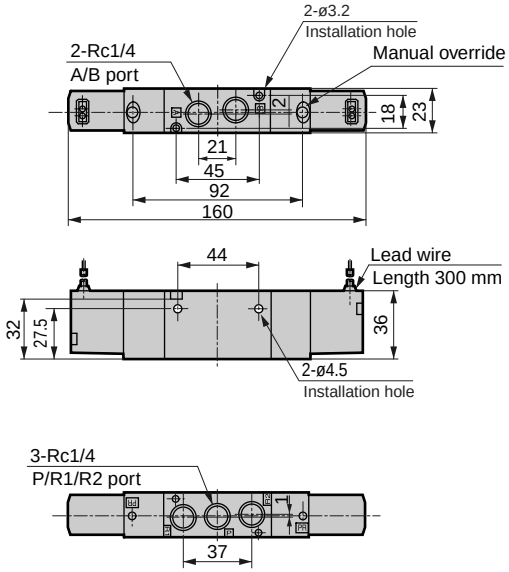

4KA3 3/4/5 0

CAD

● Mounting plate: (P <Only 2-position single solenoid>)

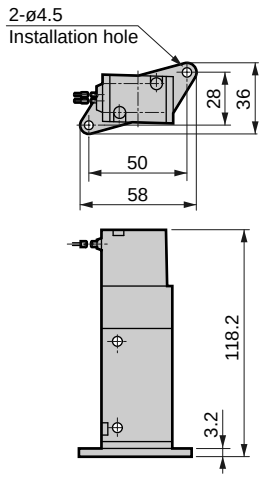

● 3-position: Grommet lead wire

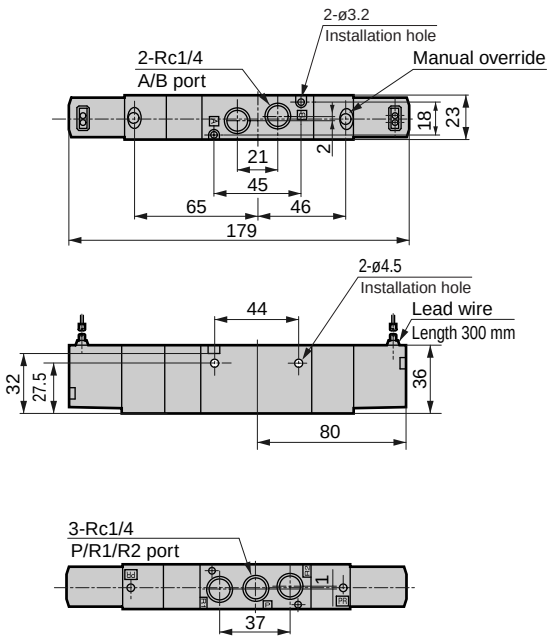

Dimensions

● ø8/ø10 push-in joint: (GS8, GS10)

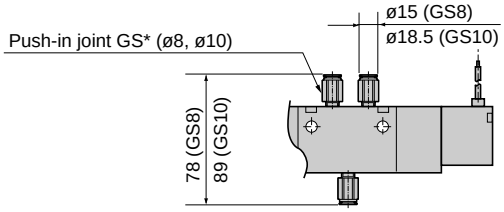

● Terminal box: (B, L, LS)

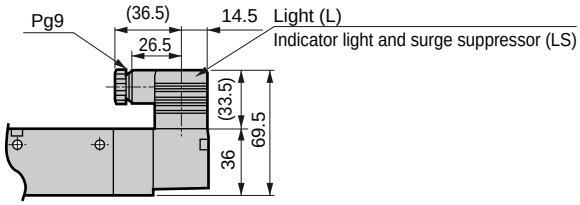

● C-connector: (C, C1, C0*, C2, C2*, C3)

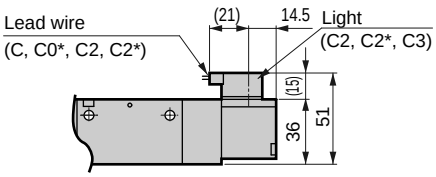

● D-connector: (D, D1, D0*, D2, D2*, D3)

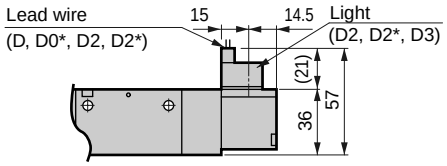

MN3E0 MN4E0
4GA/B
M4GA/B
MN4GA/B
4GA/B (Master)
W4GA/B2
W4GB4
MN3S0 MN4S0
4TB
4L2-4/ LMF0
4SA/B0
4SA/B1
4KA/B
4F
PV5G/ CMF
PV5/ CMF
3MA/B0
3PA/B
P/M/B
NP/NAP/ NVP
4F*0E
HMV HSV
2QV 3QV
SKH
PCD/ FS/FD
Ending

Dimensions

4KA410

CAD

● 2-position single solenoid: Grommet lead wire

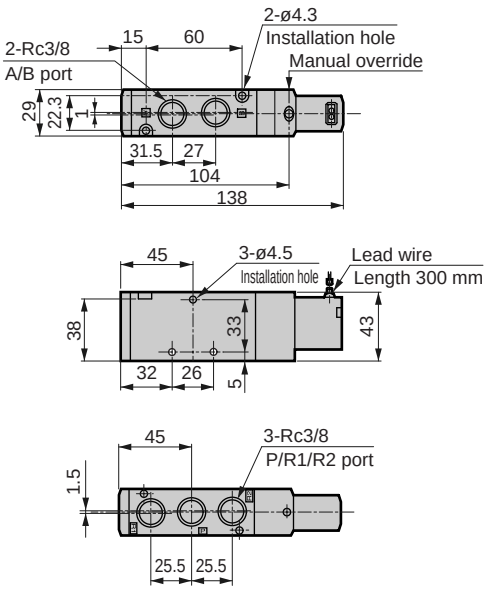

4KA420

CAD

● 2-position double solenoid: Grommet lead wire

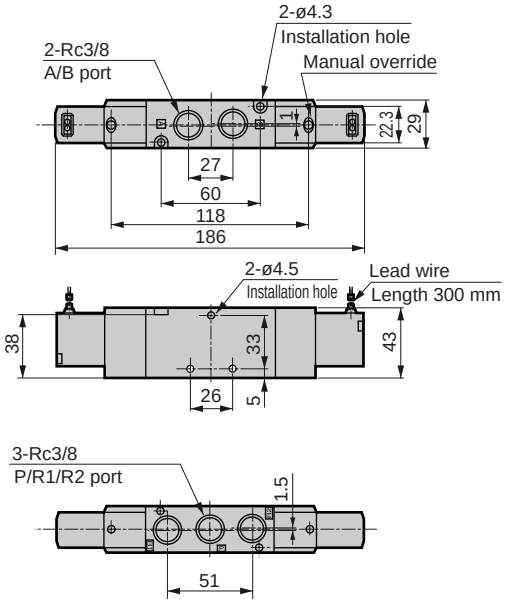

4KA4$^{3}_{5}$40

CAD

● Mounting plate: (P <Only 2-position single solenoid>)

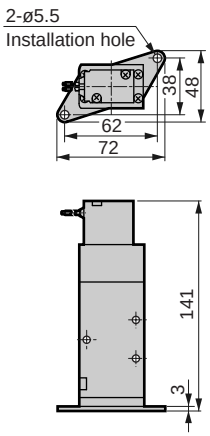

● 3-position: Grommet lead wire

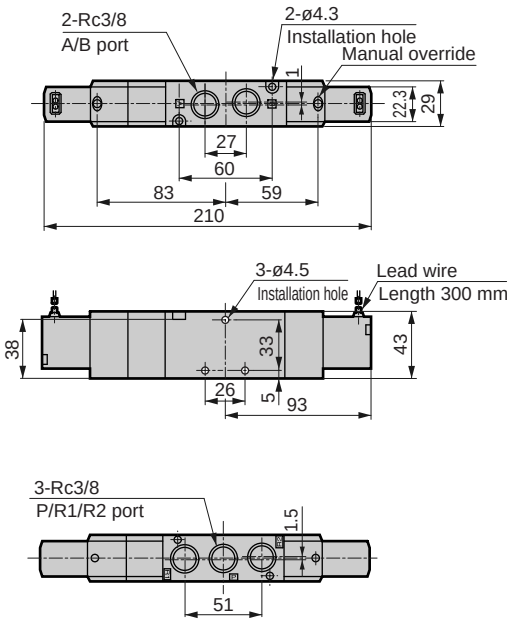

Dimensions

● ø10/ø12 push-in joint: (GS10, GS12)

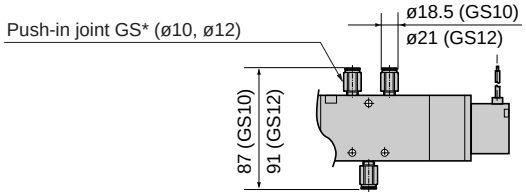

● Terminal box: (B, L, LS)

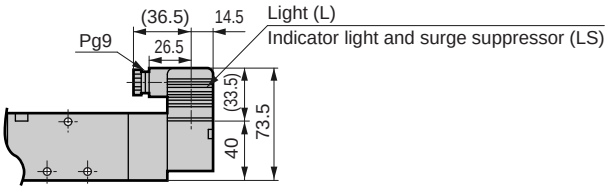

● C-connector: (C, C1, C0*, C2, C2*, C3)

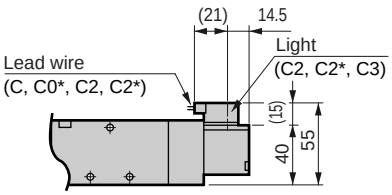

● D-connector: (D, D1, D0*, D2, D2*, D3)

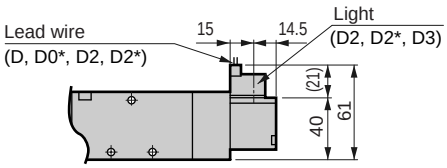

Discrete valve Sub-plate porting
5 port pilot operated valve pneumatic valve

4KB1/2/3/4 Series

● Applicable cylinder bore size: ø20 to ø160

Refer to Intro 17 for details.

JIS symbol

● 5 port valve
2-position single solenoid

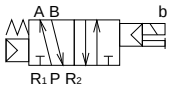

● 5 port valve
2-position double solenoid

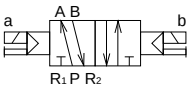

● 5 port valve
3-position all ports closed

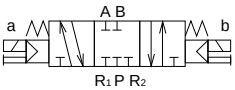

● 5 port valve
3-position A/B/R connection

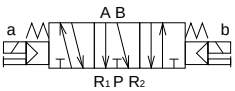

● 5 port valve
3-position P/A/B connection

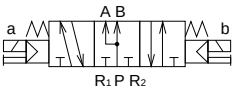

● External pilot

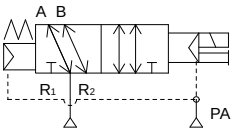

(2-position single solenoid)

Common specifications

Descriptions	
Type of valve/operation method	Pilot operated soft spool valve
Working fluid	Compressed air
Max. working pressure MPa	0.70
Min. working pressure MPa	Refer to the following individual specifications.
Withstanding pressure MPa	1.05
Ambient temperature °C	-5 to 50 (no freezing)
Fluid temperature °C	5 to 50
Lubrication	Not required
Protective structure	Dust proof
Vibration/impact m/s²	50 or less / 300 or less
Working environment	Containing corrosive gas is impermissible.

Note 1: The working pressure range is 0 to 0.7 MPa when the external pilot (option symbol: K) is selected. Set the external pilot pressure between 0.2 and 0.7 MPa.

Electric specifications

Descriptions			4KB1/2	4KB3/4
Rated voltage V	AC		100, 200 (50/60 Hz)	
	DC		24	
Rated voltage fluctuation range			±10%	
Starting current A	AC	100 V	0.056/0.044	0.046/0.042
	AC	200 V	0.028/0.022	0.023/0.021
	DC	24 V	———	
Holding current A	AC	100V	0.028/0.022	0.023/0.021
	AC	200V	0.014/0.011	
	DC	24 V	0.075	
Power consumption W Value in ( ) are with indicator light	AC	100 V	1.8 / 1.4 (1.8 / 1.5)	1.6 / 1.3 (1.8 / 1.5)
	AC	200 V	1.8 / 1.4 (1.8 / 1.5)	1.6 / 1.3 (1.8 / 1.5)
	DC	24 V	1.8 (2.0)	
Heat proof class			B (molded coil)	
Temperature rise °C			43	30

Remarks: The 100 VAC 50/60 Hz rated voltage can be used at 110 VAC 60 Hz, and 200 VAC 50/60 Hz can be used at 220 VAC 60 Hz.

Individual specifications

Descriptions			4KB1	4KB2	4KB3	4KB4
Min. working pressure MPa	2-position	Single solenoid	0.15	0.15	0.15	0.15
		Double solenoid		0.10	0.10	0.10
	3-position		0.20	0.20	0.20	0.20
Port size Note 1	P/A/B port		Rc1/8	Rc1/8, Rc1/4	Rc1/4, Rc3/8	Rc3/8, Rc1/2
	R1/R2 port		Rc1/8	Rc1/4	Rc1/4, Rc3/8	Rc3/8, Rc1/2
Response time Note 2 ms	2-position		30 or less	30 or less	30 or less	30 or less
	3-position		60 or less	60 or less	60 or less	60 or less
Weight g	2-position	Single solenoid	100	200	335	555
		Double solenoid	140	245	442	655
	3-position		150	255	474	730

Note 1: G threads and NPT threads are available for the piping port threads. Contact CKD for information.
Note 2: Response time is the value when supply pressure 0.5 MPa, not lubricated and ON. The value varies depending on pressure and quality of lubricant.

Flow characteristics

Model no.	Solenoid position		C (dm^3/ (s·bar))	b
4KB1	2-position		0.89	0.44
	3-position	All ports closed	0.63	0.50
		A/B/R connection	1.2	0.29
		P/A/B connection	0.75	0.39
4KB2	2-position		2.7	0.24
	3-position	All ports closed	2.4	0.29
		A/B/R connection	3.0	0.27
		P/A/B connection	2.4	0.34
4KB3	2-position		6.3	0.26
	3-position	All ports closed	5.6	0.27
		A/B/R connection	6.6	0.20
		P/A/B connection	5.9	0.27
4KB4	2-position		12	0.24
	3-position	All ports closed	11	0.27
		A/B/R connection	13	0.21
		P/A/B connection	10	0.22

Note 1: Effective sectional area S and sonic conductance C are converted as S ≒ 5.0 x C.

Ozone proof specifications (Ending 5)

** - Voltage - P11

Coolant proof specifications

- Special structure with excellent oil proof and water proof properties

** - A - Voltage

Copper and PTFE free

- Copper and PTFE material not used for flow path

** - Voltage - P6

4KB1 to 4 Series

Discrete valve: Sub-plate porting

How to order

4KB2 1 0 - 06 - M1 B - AC100V

- Ⓐ Model no.
- Ⓑ Solenoid position
- Ⓒ Port size
- Ⓓ Manual override
- Ⓔ Electric connection
  * Refer to page 781 for the circuit diagram of the type with surge suppressor and light.
- Ⓕ Other options
- Ⓖ Voltage

Symbol		Descriptions	Ⓐ Model no. 4KB1	4KB2	4KB3	4KB4
Ⓑ Solenoid position	1	2-position single solenoid	●	●	●	●
	2	2-position double solenoid	●	●	●	●
	3	3-position all ports closed	●	●	●	●
	4	3-position A/B/R connection	●	●	●	●
	5	3-position P/A/B connection	●	●	●	●
Ⓒ Port size	Port	P/A/B port	R1, R2 port (1) = Rc1/8 (2) = Rc1/4 (3) = Rc3/8 (4) = Rc1/2			
	06	Rc1/8	(1)	(2)		
	08	Rc1/4		(2)	(2)	
	10	Rc3/8			(3)	(3)
	15	Rc1/2				(4)
Ⓓ	Blank	Non-locking manual override	●	●	●	●
	M1	Locking manual override	●	●	●	●
Ⓔ Electric connection		Grommet lead wire				
	Blank	Grommet lead wire (300 mm)	●	●	●	●
		Small terminal box				
	B	No lead wire	●	●	●	●
	L	No lead wire	Refer to <Table 1> on the left. Note 1			
	L2	Lead wire length (300 mm)				
	LS	No lead wire with surge suppressor/light				
		C-connector (lead wire lateral)				
	C	Lead wire length (300 mm)	●	●	●	●
	C00	Lead wire length (500 mm)	●	●	●	●
	C01	Lead wire length (1000 mm)	●	●	●	●
	C02	Lead wire length (2000 mm)	●	●	●	●
	C03	Lead wire length (3000 mm)	●	●	●	●
	C1	No lead wire	●	●	●	●
	C2	Lead wire length (300 mm) with surge suppressor/light	●	●	●	●
	C20	Lead wire length (500 mm) with surge suppressor/light	●	●	●	●
	C21	Lead wire length (1000 mm) with surge suppressor/light	●	●	●	●
	C22	Lead wire length (2000 mm) with surge suppressor/light	●	●	●	●
	C23	Lead wire length (3000 mm) with surge suppressor/light	●	●	●	●
	C3	No lead wire with surge suppressor/light	●	●	●	●
		D-connector (lead wire upward)				
	D	Lead wire length (300 mm)	●	●	●	●
	D00	Lead wire length (500 mm)	●	●	●	●
	D01	Lead wire length (1000 mm)	●	●	●	●
	D02	Lead wire length (2000 mm)	●	●	●	●
	D03	Lead wire length (3000 mm)	●	●	●	●
	D1	No lead wire	●	●	●	●
	D2	Lead wire length (300 mm) with surge suppressor/light	●	●	●	●
	D20	Lead wire length (500 mm) with surge suppressor/light	●	●	●	●
	D21	Lead wire length (1000 mm) with surge suppressor/light	●	●	●	●
	D22	Lead wire length (2000 mm) with surge suppressor/light	●	●	●	●
	D23	Lead wire length (3000 mm) with surge suppressor/light	●	●	●	●
	D3	No lead wire with surge suppressor/light	●	●	●	●
Ⓕ	Blank	No option	●	●	●	●
	K	External pilot Note 2	●	●	●	●
	S	Surge suppressor attached Note 3	●	●	●	●
Ⓖ Voltage	AC100V	100 VAC 50/60Hz (Standard)	●	●	●	●
	AC200V	200 VAC 50/60Hz (Standard)	●	●	●	●
	DC24V	24 VDC (Standard)	●	●	●	●
	AC110V	110 VAC 50/60Hz (Option)	●	●	●	●
	AC220V	220 VAC 50/60Hz (Option)	●	●	●	●
	DC12V	12 VDC (Option)	●	●	●	●

<Table 1> Small terminal box L/L2/LS table

Symbol	Descriptions			4KB1	4KB2	4KB3	4KB4	Surge suppressor
L	No lead wire	With light	AC	●	●	●	●	
			DC			●	●	
		With surge suppressor/light	AC					
			DC	●	●			Integrated
L2	With lead wire (300 mm)	With light	AC	●	●			
			DC					
		With surge suppressor/light	AC					
			DC	●	●			Integrated
LS	No lead wire	With surge suppressor/light	AC	●	●	●	●	Integrated
			DC			●	●	Integrated

Note on model no. selection

Note 1: 4KB1 and 4KB2 compact terminal box, L and L2 DC voltage, and LS have a built-in surge absorber.
Note 2: Consult CKD for details on using vacuum with the external pilot (K).
Note 3: With a 24 VDC or less grommet lead wire, the enclosed surge suppressor is a suppression connector. (Refer to page 780)

<Example of model number>

4KB210-06-M1BK-AC100V

- Ⓐ Model : 4KB2
- Ⓑ Solenoid position : 2-position single solenoid
- Ⓒ Port size : Rc1/8
- Ⓓ Manual override : Locking manual override
- Ⓔ Electric connection : Small terminal box, w/o lead wire
- Ⓕ Other options : Mounting plate
- Ⓖ Voltage : 100 VAC 50/60Hz

MEMO

MN3E0 MN4E0
4GA/B
M4GA/B
MN4GA/B
4GA/B (Master)
W4GA/B2
W4GB4
MN3S0 MN4S0
4TB
4L2-4/ LMF0
4SA/B0
4SA/B1
4KA/B
4F
PV5G/ CMF
PV5/ CMF
3MA/B0
3PA/B
P/M/B
NP/NAP/ NVP
4F*0E
HMV HSV
2QV 3QV
SKH
PCD/ FS/FD
Ending

Internal structure and parts list

4KB110

● 2-position single solenoid

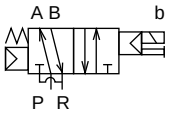

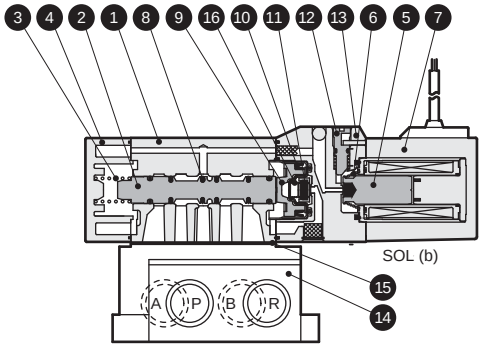

4KB120

● 2-position double solenoid

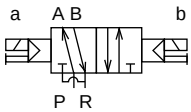

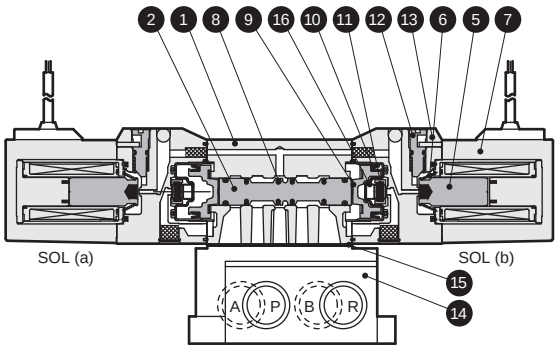

4KB130

● 3-position all ports closed

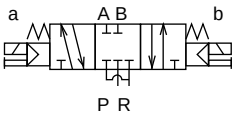

4KB140

● 3-position A/B/R connection

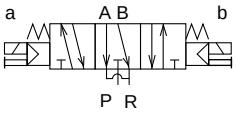

4KB150

● 3-position P/A/B connection

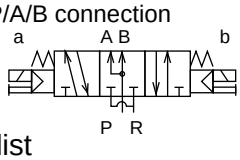

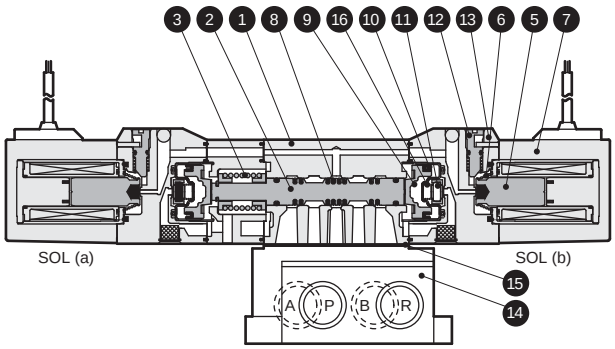

Main parts list

No.	Parts name	Material
1	Body	Aluminum alloy die-casting
2	Valving element (spool)	Aluminum
3	Valve spring	Stainless steel
4	Cap	Resin
5	Plunger	-
6	Plunger spring	-
7	Coil assembly	-
8	Spool packing seal	Nitrile rubber
9	Piston	Resin
10	Piston packing seal	Nitrile rubber
11	Valve seat	Nitrile rubber
12	Manual button	Resin
13	Pilot operated valve	Resin
14	Sub-plate	Aluminum alloy die-casting
15	Gasket	Nitrile rubber
16	Valve seat spring	Stainless steel

Main parts list

No.	Component name	Model no.
14	Sub-plate kit	4KB110- Ⓑ Port size - Ⓕ External pilot -SUB-BASE-KIT
15		

* Set screw is included with a sub-plate kit.

Repair parts list

No. / parts name	2 8	9 10	5 6 7
Model no.	Spool assembly	Piston assembly	Coil assembly *
4KB110	4K9-110	4K9-151	4K1L- Ⓔ Electric connection option symbol - Blank for grommet lead wire COIL- Ⓖ Voltage
4KB120	4K9-118		
4KB130	4K9-111	4K9-152	
4KB140	4K9-112		
4KB150	4K9-113		

* Options satisfying the model selection are assembled or enclosed with the coil assembly compact terminal box and connector.

Internal structure and parts list

4KB210

● 2-position single solenoid

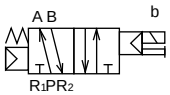

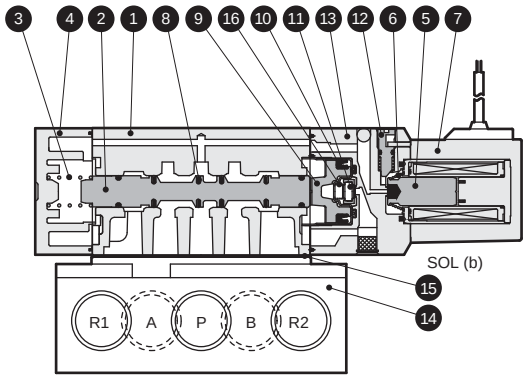

4KB220

● 2-position double solenoid

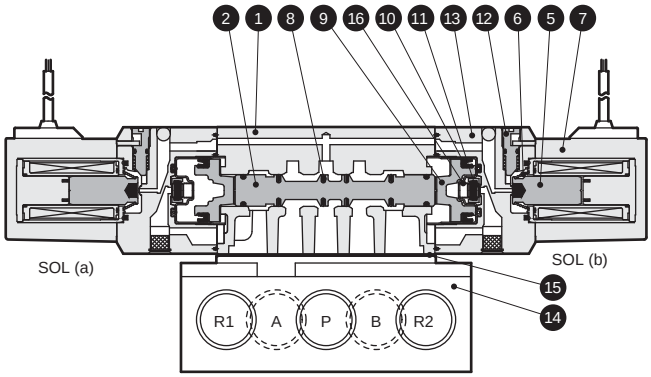

4KB230

● 3-position all ports closed

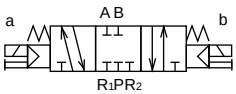

4KB240

● 3-position A/B/R connection

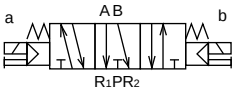

4KB250

● 3-position P/A/B connection

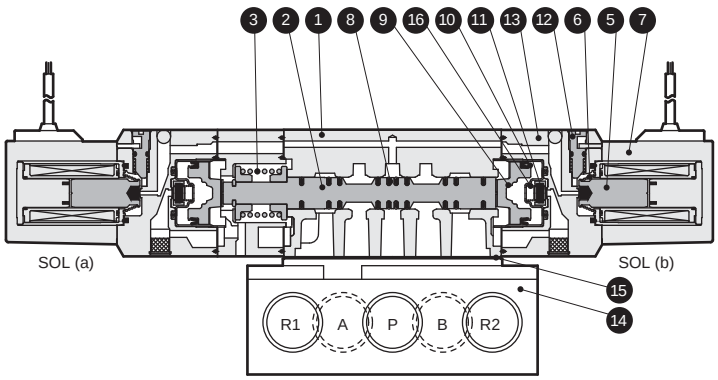

Main parts list

No.	Parts name	Material
1	Body	Aluminum alloy die-casting
2	Valving element (spool)	Aluminum
3	Valve spring	Stainless steel
4	Cap	Resin
5	Plunger	-
6	Plunger spring	-
7	Coil assembly	-
8	Spool packing seal	Nitrile rubber
9	Piston	Resin
10	Piston packing seal	Nitrile rubber
11	Valve seat	Nitrile rubber
12	Manual button	Resin
13	Pilot operated valve	Resin
14	Sub-plate	Aluminum alloy die-casting
15	Gasket	Nitrile rubber
16	Valve seat spring	Stainless steel

Main parts list

No.	Component name	Model no.
14 15	Sub-plate kit	4KB210- Ⓑ Port size - Ⓕ External pilot -SUB-BASE-KIT

* Set screw is included with a sub-plate kit.

Repair parts list

No. / parts name	2 8	9 10	5 6 7
Model no.	Spool assembly	Piston assembly	Coil assembly *
4KB210	4K9-150	4K9-153	4K1L- Ⓔ Electric connection option symbol - Blank for grommet lead wire COIL- Ⓖ Voltage
4KB220	4K9-126		
4KB230	4K9-127	4K9-154	
4KB240	4K9-128		
4KB250	4K9-129		

* Options satisfying the model selection are assembled or enclosed with the coil assembly compact terminal box and connector.

Internal structure and parts list

4KB310

● 2-position single solenoid

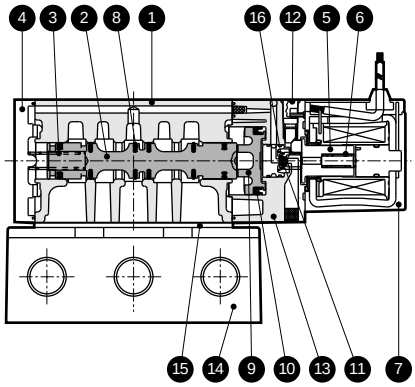

4KB320

● 2-position double solenoid

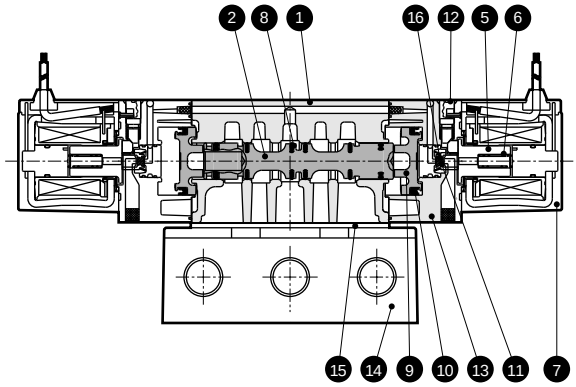

4KB330

● 3-position all ports closed

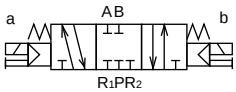

4KB340

● 3-position A/B/R connection

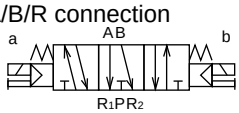

4KB350

● 3-position P/A/B connection

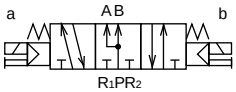

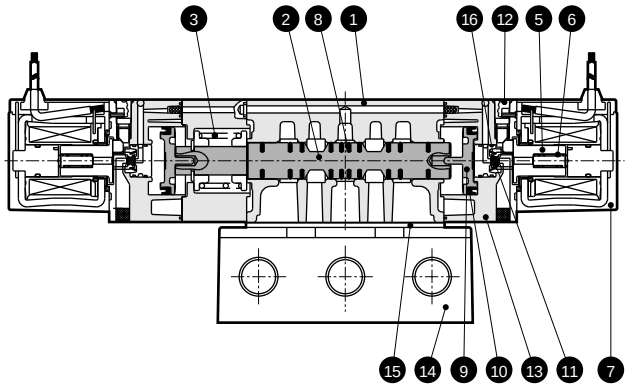

Main parts list

No.	Parts name	Material
1	Body	Aluminum alloy die-casting
2	Valving element (spool)	Aluminum
3	Valve spring	Stainless steel
4	Cap	Resin
5	Plunger	-
6	Plunger spring	-
7	Coil assembly	-
8	Spool packing seal	Nitrile rubber
9	Piston	Resin
10	Piston packing seal	Nitrile rubber
11	Valve seat	Nitrile rubber
12	Manual button	Resin
13	Pilot operated valve	Resin
14	Sub-plate	Aluminum alloy die-casting
15	Gasket *2	Nitrile rubber
16	Valve seat spring	Stainless steel

Main parts list

No.	Component name	Model no.
14 15	Sub-plate kit	4KB310- Ⓑ Port size - Ⓕ External pilot -SUB-BASE-KIT

* Set screw is included with a sub-plate kit.

Repair parts list

No. / parts name	2 8	9 10	5 6 7
Model no.	Spool assembly	Piston assembly	Coil assembly *1
4KB310	4K9-133	4K9-137	4K3- Ⓔ Electric connection option symbol - Blank for grommet lead wire COIL- Ⓖ Voltage
4KB320			
4KB330	4K9-134	4K9-138	
4KB340	4K9-135		
4KB350	4K9-136		

*1: Options satisfying the model selection are assembled or enclosed with the coil assembly compact terminal box and connector.
*2: The gasket (15) has a preset installation direction.

Internal structure and parts list

4KB410

●2-position single solenoid

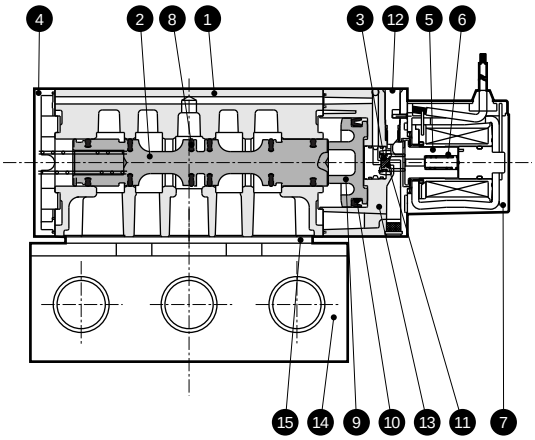

4KB420

●2-position double solenoid

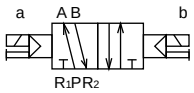

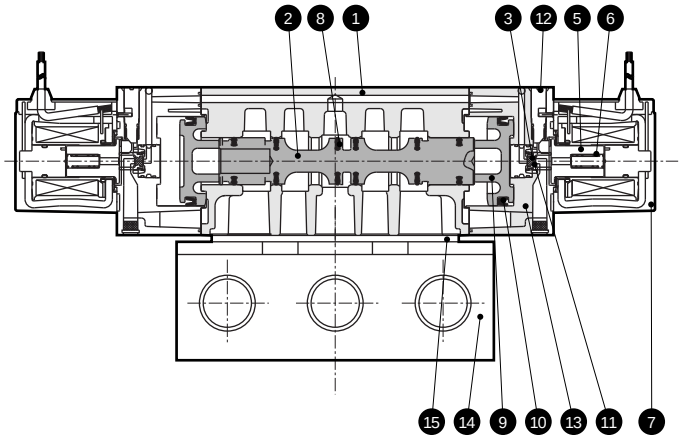

4KB430

●3-position all ports closed

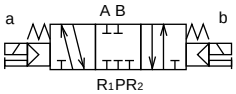

4KB440

●3-position A/B/R connection

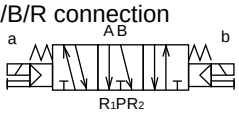

4KB450

●3-position P/A/B connection

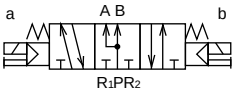

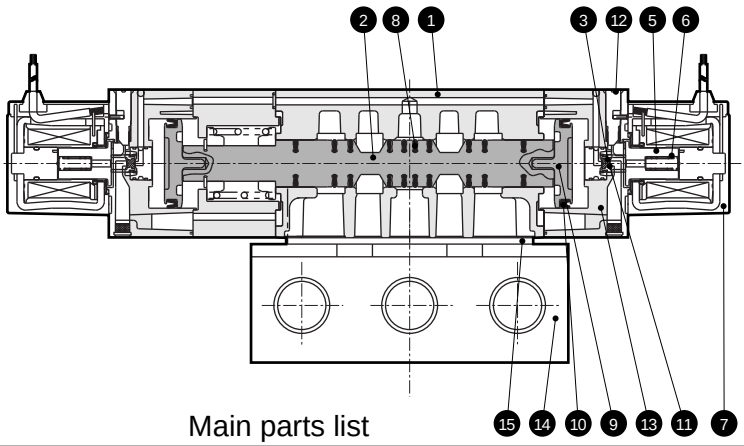

Main parts list

No.	Parts name	Material
1	Body	Aluminum alloy die-casting
2	Valving element (spool)	Aluminum
3	Valve spring	Stainless steel
4	Cap	Resin
5	Plunger	-
6	Plunger spring	-
7	Coil assembly	-
8	Spool packing seal	Nitrile rubber
9	Piston	Resin
10	Piston packing seal	Nitrile rubber
11	Valve seat	Nitrile rubber
12	Manual button	Resin
13	Pilot operated valve	Resin
14	Sub-plate	Aluminum alloy die-casting
15	Gasket	Nitrile rubber
16	Valve seat spring	Stainless steel

Main parts list

No.	Component name	Model no.
14 15	Sub-plate kit	4KB410-Ⓑ Port size - Ⓕ External pilot -SUB-BASE-KIT

* Set screw is included with a sub-plate kit.

Repair parts list

No. / parts name Model no.	2 8 Spool assembly	9 10 Piston assembly	5 6 7 Coil assembly *
4KB410	4K9-140	4K9-144	4K3-Ⓔ Electric connection option symbol- Blank for grommet lead wire COIL-Ⓖ Voltage
4KB420			
4KB430	4K9-141	4K9-145	
4KB440	4K9-142		
4KB450	4K9-143		

*1: The plunger assembly is enclosed with the coil assembly. The coil and plunger combination is limited, so do not interchange parts.
*2: Options satisfying the model selection are assembled or enclosed with the coil assembly compact terminal box and connector.
*3: Precautions apply when assembling the coil assembly into the valve. Contact CKD for information.

MN3E0 MN4E0
4GA/B
M4GA/B
MN4GA/B
4GA/B (Master)
W4GA/B2
W4GB4
MN3S0 MN4S0
4TB
4L2-4/ LMF0
4SA/B0
4SA/B1
4KA/B
4F
PV5G/ CMF
PV5/ CMF
3MA/B0
3PA/B
P/M/B
NP/NAP/ NVP
4F*0E
HMV HSV
2QV 3QV
SKH
PCD/ FS/FD
Ending

Dimensions

4KB110

● 2-position single solenoid: Grommet lead wire

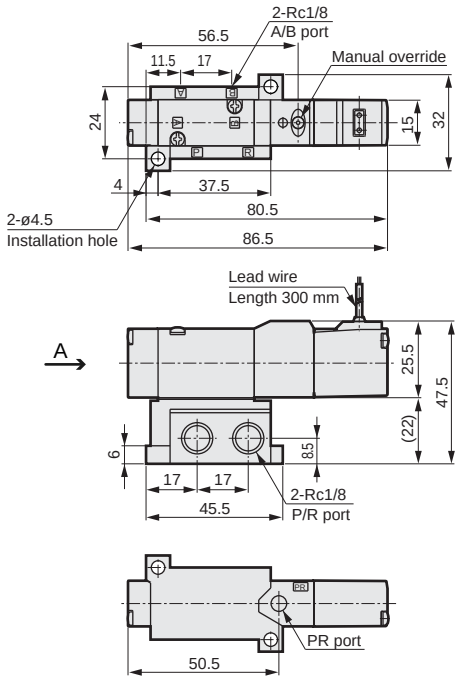

4KB120

● 2-position double solenoid: Grommet lead wire

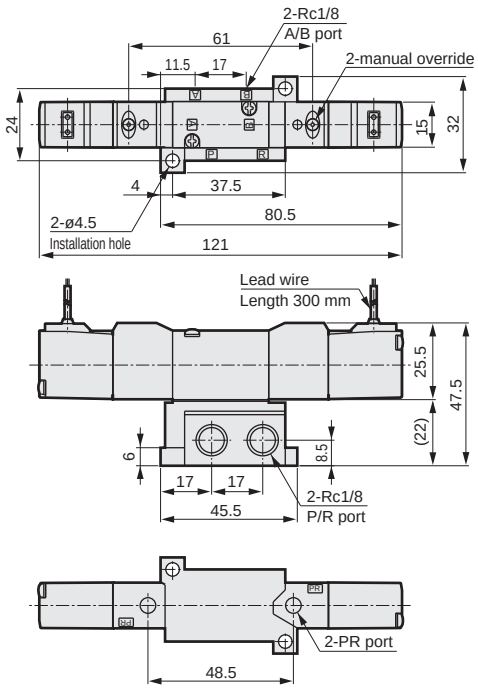

4KB1 3/4/5 0

● 3-position: Grommet lead wire

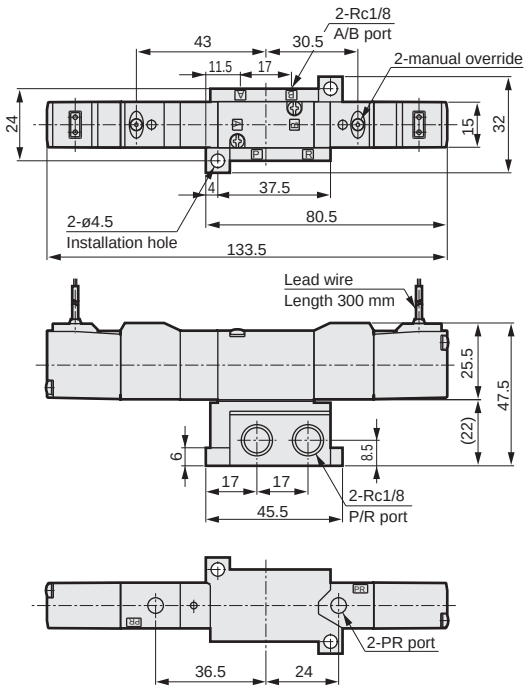

Dimensions

● Small terminal box: (B <without indicator light> , L, L2, LS <with indicator light>)

Without indicator light

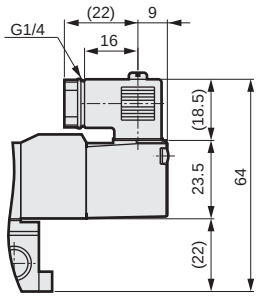

With indicator light

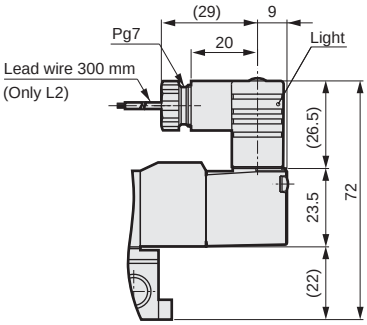

● C-connector: (C, C1, C0*, C2, C2*, C3)

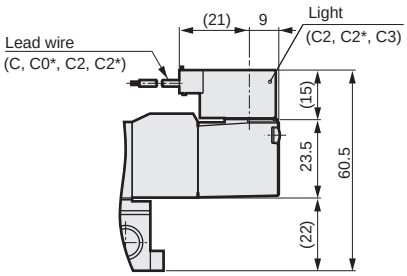

● D-connector: (D, D1, D0*, D2, D2*, D3)

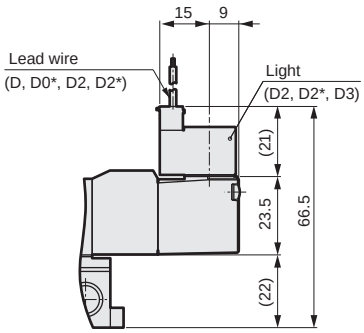

● External pilot: (K)

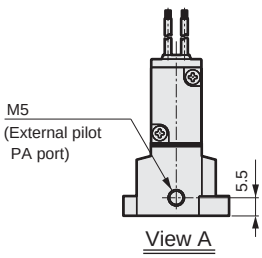

MN3E0
MN4E0
4GA/B
M4GA/B
MN4GA/B
4GA/B (Master)
W4GA/B2
W4GB4
MN3S0
MN4S0
4TB
4L2-4/ LMF0
4SA/B0
4SA/B1
4KA/B
4F
PV5G/ CMF
PV5/ CMF
3MA/B0
3PA/B
P/M/B
NP/NAP/ NVP
4F*0E
HMV
HSV
2QV
3QV
SKH
PCD/ FS/FD
Ending

Dimensions

4KB210

● 2-position single solenoid: Grommet lead wire

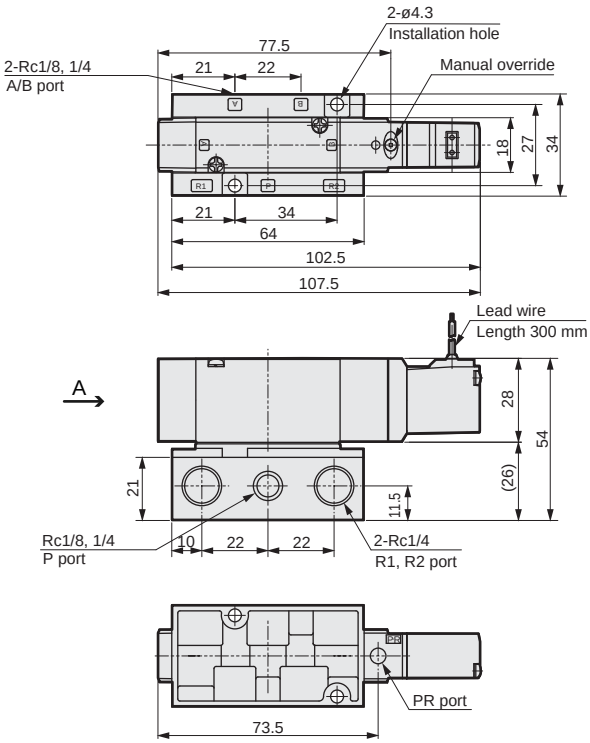

4KB220

● 2-position double solenoid: Grommet lead wire

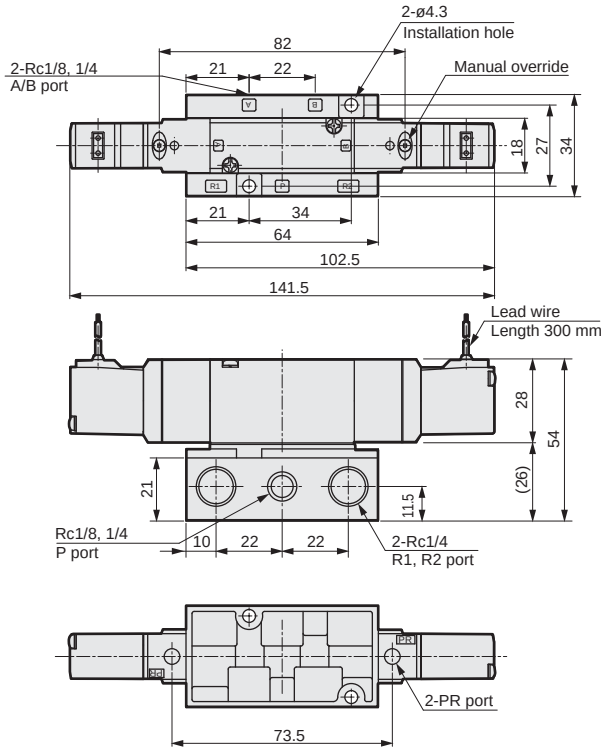

4KB2 3/4/5 0

● 3-position: Grommet lead wire

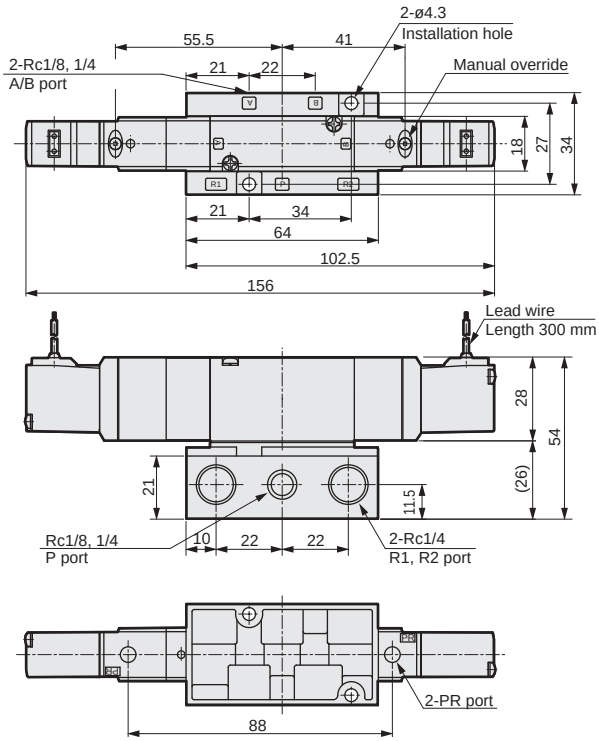

Dimensions

● Small terminal box: (B <without indicator light> , L, L2, LS <with indicator light>)

Without indicator light

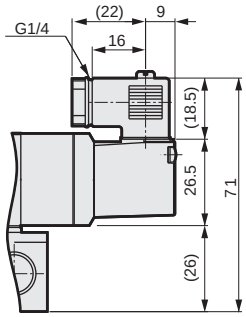

With indicator light

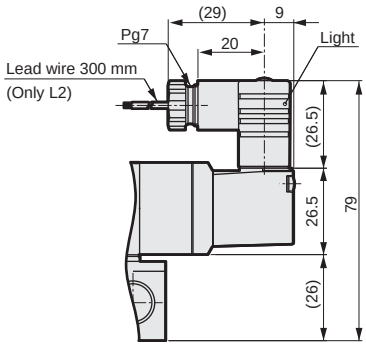

● C-connector: (C, C1, C0*, C2, C2*, C3)

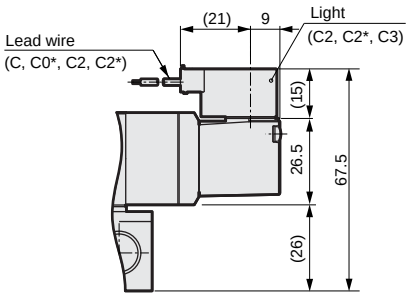

● D-connector: (D, D1, D0*, D2, D2*, D3)

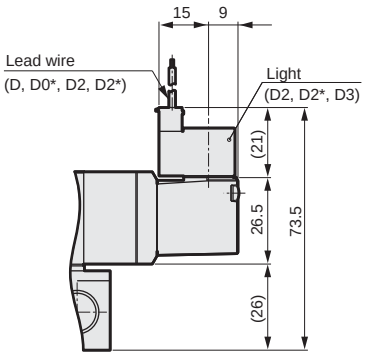

● External pilot: (K)

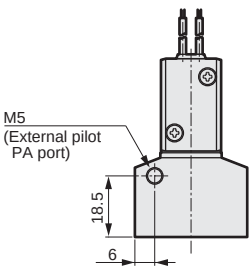

View A

MN3E0 MN4E0
4GA/B
M4GA/B
MN4GA/B
4GA/B (Master)
W4GA/B2
W4GB4
MN3S0 MN4S0
4TB
4L2-4/ LMF0
4SA/B0
4SA/B1
4KA/B
4F
PV5G/ CMF
PV5/ CMF
3MA/B0
3PA/B
P/M/B
NP/NAP/ NVP
4F*0E
HMV HSV
2QV 3QV
SKH
PCD/ FS/FD
Ending

Dimensions

4KB310

● 2-position single solenoid: Grommet lead wire

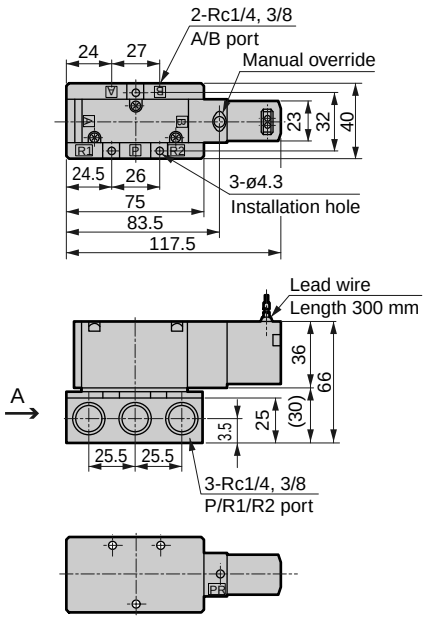

4KB320

● 2-position double solenoid: Grommet lead wire

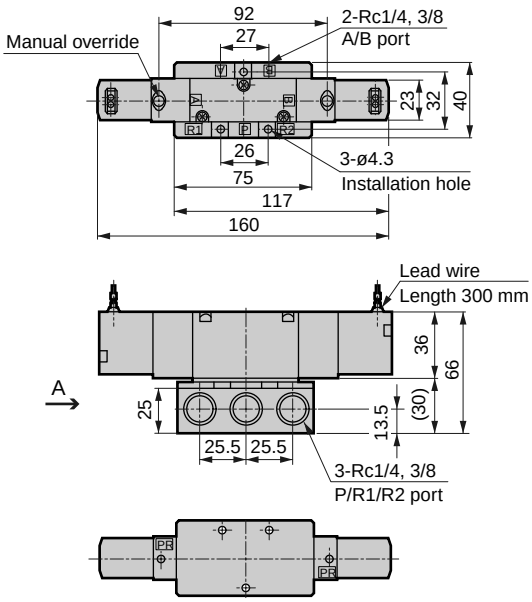

4KB3$^{3}_{4}$$^{0}_{5}$

● 3-position: Grommet lead wire

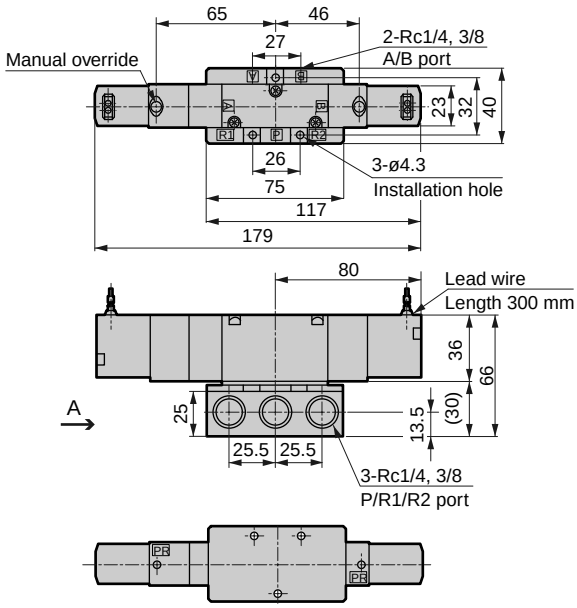

Dimensions

● Terminal box: (B, L, LS)

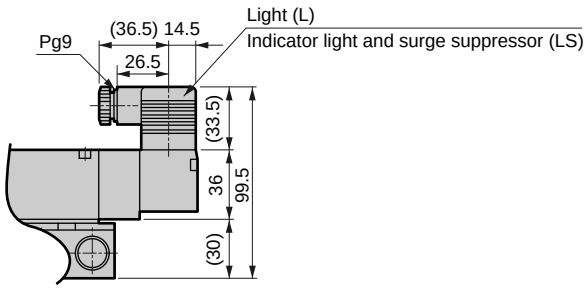

● C-connector: (C, C1, C0*, C2, C2*, C3)

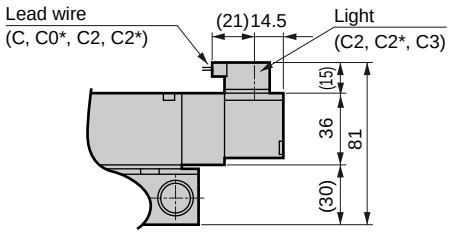

● D-connector: (D, D1, D0*, D2, D2*, D3)

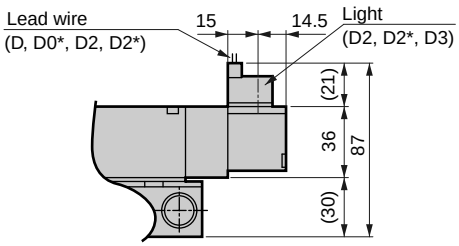

● External pilot: (K)

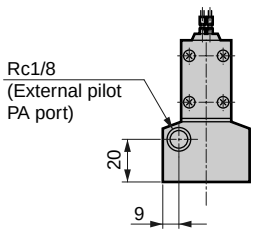

View A

MN3E0
MN4E0
4GA/B
M4GA/B
MN4GA/B
4GA/B (Master)
W4GA/B2
W4GB4
MN3S0
MN4S0
4TB
4L2-4/ LMF0
4SA/B0
4SA/B1
4KA/B
4F
PV5G/ CMF
PV5/ CMF
3MA/B0
3PA/B
P/M/B
NP/NAP/ NVP
4F*0E
HMV
HSV
2QV
3QV
SKH
PCD/ FS/FD
Ending

Dimensions

4KB410

● 2-position single solenoid: Grommet lead wire

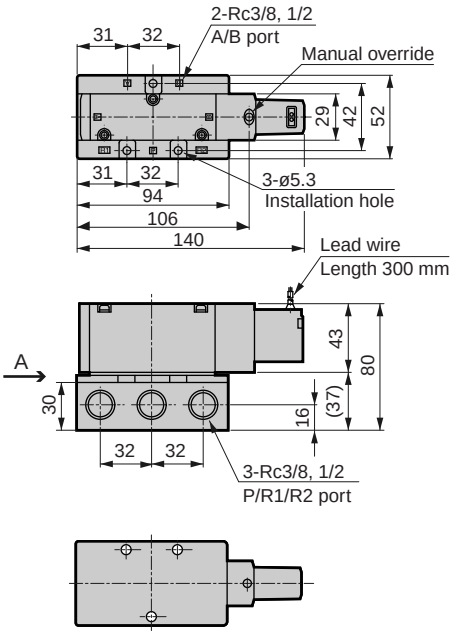

4KB420

● 2-position double solenoid: Grommet lead wire

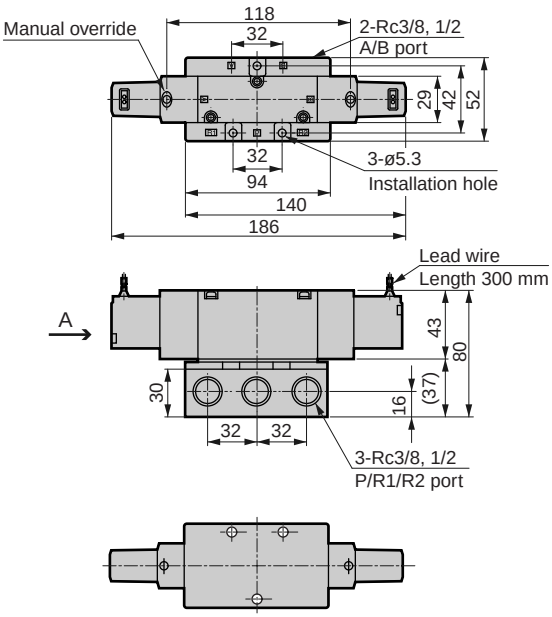

4KB4$^{3}_{4}{}^{4}_{5}$0

● 3-position: Grommet lead wire

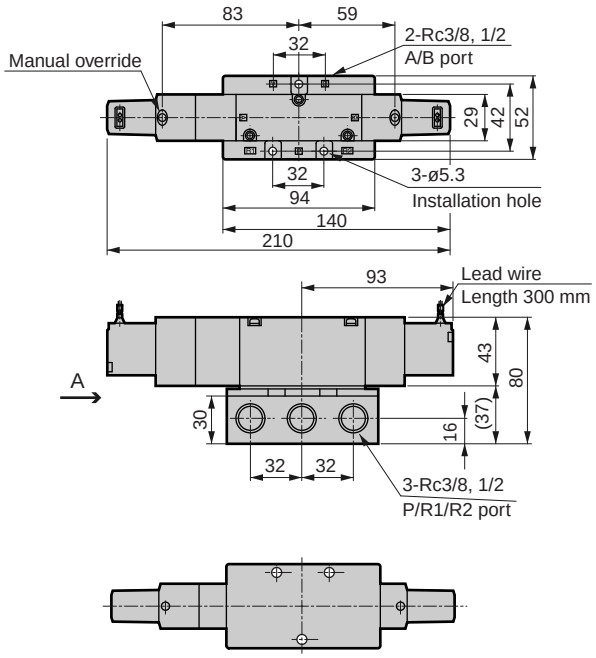

Dimensions

● Terminal box: (B, L, LS)

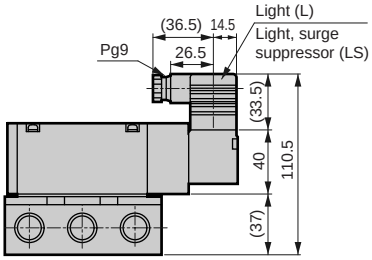

● C-connector: (C, C1, C0*, C2, C2*, C3)

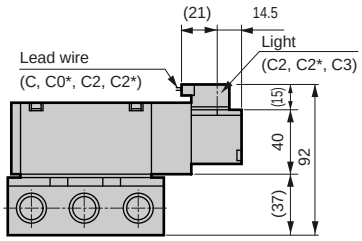

● D-connector: (D, D1, D0*, D2, D2*, D3)

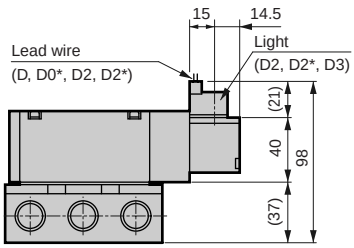

● External pilot: (K)

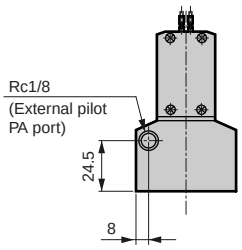

View A

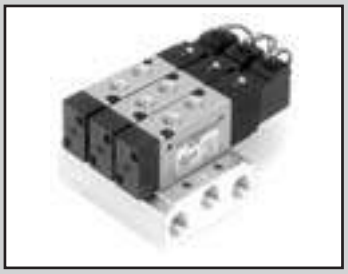

Individual wiring manifold Body porting
3, 5 port pilot operated valve pneumatic valve
M3KA1, M4KA1/2/3/4 Series

● Applicable cylinder bore size: ø20 to ø160

Refer to Intro 17 for details.

JIS symbol

● 3 port valve
2-position single N.C. type

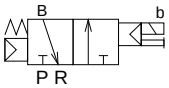

● 3 port valve
2-position single N.O. type

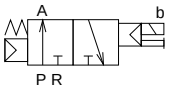

● 3 port valve
2-position double N.C. type

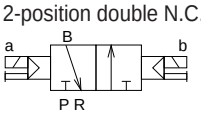

● 5 port valve
2-position single solenoid

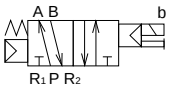

● 5 port valve
2-position double solenoid

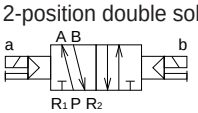

● 5 port valve
3-position all ports closed

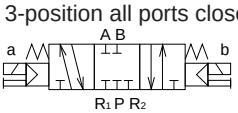

● 5 port valve
3-position A/B/R connection

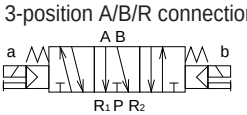

● 5 port valve
3-position P/A/B connection

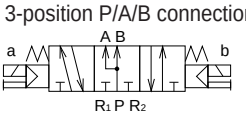

Common specifications

Descriptions	
Manifold method	Manifold integrated
Manifold type	Common supply, common exhaust
Station number	Note 1 2 to 20 stations
Type of valve/operation method	Pilot operated soft spool valve
Working fluid	Compressed air
Max. working pressure MPa	0.70
Min. working pressure MPa	Refer to the following individual specifications.
Withstanding pressure MPa	1.05
Ambient temperature °C	-5 to 50 (no freezing)
Fluid temperature °C	5 to 50
Lubrication	Not required
Protective structure	Dust proof
Vibration/impact m/s²	50 or less / 300 or less
Working environment	Containing corrosive gas is impermissible.

Note 1: The maximum number of stations for 4KA3 is 15 and for 4KA4 is 12.

Electric specifications

Descriptions			3KA1, 4KA1/2	4KA3/4
Rated voltage V	AC		100, 200 (50/60 Hz)	
	DC		24	
Rated voltage fluctuation range			±10%	
Starting current A	AC	100 V	0.056/0.044	0.046/0.042
	AC	200 V	0.028/0.022	0.023/0.021
	DC	24 V	———	
Holding current A	AC	100 V	0.028/0.022	0.023/0.021
	AC	200 V	0.014/0.011	0.014/0.011
	DC	24 V	0.075	
Power consumption W Value in ( ) are with indicator light	AC	100 V	1.8 / 1.4 (1.8 / 1.5)	1.6 / 1.3 (1.8 / 1.5)
	AC	200 V	1.8 / 1.4 (1.8 / 1.5)	1.6 / 1.3 (1.8 / 1.5)
	DC	24 V	1.8 (2.0)	
Heat proof class			B (molded coil)	
Temperature rise °C			43	30

Remarks: The 100 VAC 50/60 Hz rated voltage can be used at 110 VAC 60 Hz, and 200 VAC 50/60 Hz can be used at 220 VAC 60 Hz.

Individual specifications

Descriptions			3KA1	4KA1	4KA2	4KA3	4KA4
Min. working pressure MPa	2-position	Single solenoid	0.15	0.15	0.15	0.15	0.15
		Double solenoid			0.10	0.10	0.10
	3-position		-	0.20	0.20	0.20	0.20
Port size Note 1	A/B port		M5 Push-in joint ø4, ø6	M5 Push-in joint ø4, ø6	Rc1/8 Push-in joint ø6, ø8	Rc1/4 Push-in joint ø8, ø10	Rc3/8 Push-in joint ø10, ø12
	P/R1/R2 port		Rc1/8	Rc1/8	Rc1/4	Rc3/8	Rc1/2
Response time Note 2 ms	2-position		30 or less	30 or less	30 or less	30 or less	30 or less
	3-position		-	60 or less	60 or less	60 or less	60 or less

Note 1: G threads and NPT threads are available for the piping port threads. Contact CKD for information.
Note 2: Response time is the value when supply pressure 0.5 MPa, not lubricated and ON. The value varies depending on pressure and quality of lubricant.

Flow characteristics

Model no.	Solenoid position		C (dm^3/ (s·bar))	b
3KA1	2-position		0.69	0.29
4KA1	2-position		0.69	0.29
	3-position	All ports closed	0.69	0.29
		A/B/R connection	0.97	0.31
		P/A/B connection	0.73	0.30
4KA2	2-position		2.6	0.25
	3-position	All ports closed	2.4	0.32
		A/B/R connection	3.0	0.16
		P/A/B connection	2.4	0.31
4KA3	2-position		5.6	0.39
	3-position	All ports closed	4.1	0.51
		A/B/R connection	5.9	0.37
		P/A/B connection	4.1	0.56
4KA4	2-position		9.7	0.29
	3-position	All ports closed	8.3	0.40
		A/B/R connection	11	0.30
		P/A/B connection	8.7	0.46

Note 1: Effective sectional area S and sonic conductance C are converted as S ≒ 5.0 x C.
Flow characteristics are the value when port size is M5 (3KA1, 4KA1), Rc1/8 (4KA2), Rc1/4 (4KA3) and Rc3/8 (4KA4).

Ozone proof specifications (Ending 5)

** - Voltage - P11

Coolant proof specifications

- Special structure with excellent oil proof and water proof properties

** - A - Station number - Voltage

Copper and PTFE free

- Copper and PTFE material not used for flow path

** - Voltage - P6

M3KA1/M4KA1 to 4 Series

Individual wiring manifold: Body porting

How to order

● Discrete solenoid valve for manifold

4KA1 1 9 - 06 - M1 B ——— AC100V * Gasket and set screw attached

● Manifold

M 4KA2 1 0 - 06 - M1 B - 5 - AC100V - 2 2 0 0 0 1

When selecting the mixed manifold, indicate the quantity for each valve function. Refer to the following page.

Ⓐ Model no. Ⓑ Solenoid position Ⓒ Port size Ⓓ Manual override Ⓔ Electric connection Ⓕ Other options Ⓖ Station number Ⓗ Voltage

* Refer to page 781 for the circuit diagram of the type with surge suppressor and light.

	Symbol	Descriptions	Ⓐ Model no. 3KA1	4KA1	4KA2	4KA3	4KA4
Ⓑ Solenoid position	1	2-position single solenoid		●	●	●	●
	2	2-position double solenoid	●	●	●	●	●
	3	3-position all ports closed		●	●	●	●
	4	3-position A/B/R connection		●	●	●	●
	5	3-position P/A/B connection		●	●	●	●
	1	2-position single solenoid normally closed	●				
	11	2-position single solenoid normally open	●				
	8	Mix manifold Note 1	●	●	●	●	●
Ⓒ Port size	Port	A/B port / P/R1/R2 port (1)=Rc1/8 (2)=Rc1/4 (3)=Rc3/8 (4)=Rc1/2					
	M5	M5	(1)	(1)			
	06	Rc1/8			(2)		
	08	Rc1/4				(3)	
	10	Rc3/8					(4)
	GS4	ø4 push-in joint	(1)	(1)			
	GS6	ø6 push-in joint	(1)	(1)	(2)		
	GS8	ø8 push-in joint			(2)	(3)	
	GS10	ø10 push-in joint				(3)	(4)
	GS12	ø12 push-in joint					(4)
Ⓓ	Blank	Non-locking manual override	●	●	●	●	●
	M1	Locking manual override	●	●	●	●	●
Ⓔ Electric connection		Grommet lead wire					
	Blank	Grommet lead wire (300 mm)	●	●	●	●	●
		Small terminal box					
	B	No lead wire	●	●	●	●	●
	L	No lead wire	Refer to <Table 1> on the left. Note 2				
	L2	Lead wire length (300 mm)					
	LS	No lead wire with surge suppressor/light					
		C-connector (lead wire lateral)					
	C	Lead wire length (300 mm)	●	●	●	●	●
	C00	Lead wire length (500 mm)	●	●	●	●	●
	C01	Lead wire length (1000 mm)	●	●	●	●	●
	C02	Lead wire length (2000 mm)	●	●	●	●	●
	C03	Lead wire length (3000 mm)	●	●	●	●	●
	C1	No lead wire	●	●	●	●	●
	C2	Lead wire length (300 mm) with surge suppressor/light	●	●	●	●	●
	C20	Lead wire length (500 mm) with surge suppressor/light	●	●	●	●	●
	C21	Lead wire length (1000 mm) with surge suppressor/light	●	●	●	●	●
	C22	Lead wire length (2000 mm) with surge suppressor/light	●	●	●	●	●
	C23	Lead wire length (3000 mm) with surge suppressor/light	●	●	●	●	●
	C3	No lead wire with surge suppressor/light	●	●	●	●	●
		D-connector (lead wire upward)					
	D	Lead wire length (300 mm)	●	●	●	●	●
	D00	Lead wire length (500 mm)	●	●	●	●	●
	D01	Lead wire length (1000 mm)	●	●	●	●	●
	D02	Lead wire length (2000 mm)	●	●	●	●	●
	D03	Lead wire length (3000 mm)	●	●	●	●	●
	D1	No lead wire	●	●	●	●	●
	D2	Lead wire length (300 mm) with surge suppressor/light	●	●	●	●	●
	D20	Lead wire length (500 mm) with surge suppressor/light	●	●	●	●	●
	D21	Lead wire length (1000 mm) with surge suppressor/light	●	●	●	●	●
	D22	Lead wire length (2000 mm) with surge suppressor/light	●	●	●	●	●
	D23	Lead wire length (3000 mm) with surge suppressor/light	●	●	●	●	●
	D3	No lead wire with surge suppressor/light	●	●	●	●	●
Ⓕ	Blank	No option	●	●	●	●	●
	S	Surge suppressor attached Note 3	●	●	●	●	●
Ⓖ	2 to 12	2 to 12 stations					●
	2 to 15	2 to 15 stations				●	
	2 to 20	2 to 20 stations	●	●	●		
Ⓗ Voltage	AC100V	100 VAC 50/60Hz (Standard)	●	●	●	●	●
	AC200V	200 VAC 50/60Hz (Standard)	●	●	●	●	●
	DC24V	24 VDC (Standard)	●	●	●	●	●
	AC110V	110 VAC 50/60Hz (Option)	●	●	●	●	●
	AC220V	220 VAC 50/60Hz (Option)	●	●	●	●	●
	DC12V	12 VDC (Option)	●	●	●	●	●

<Table 1> Small terminal box L/L2/LS table

Symbol	Descriptions			3KA1	4KA1	4KA2	4KA3	4KA4	Surge suppressor
L	No lead wire	With light	AC	●	●	●	●	●	
			DC				●	●	
		With surge suppressor/light	AC						
			DC	●	●	●			Integrated
L2	With lead wire (300 mm)	With light	AC	●	●	●			
			DC						
		With surge suppressor/light	AC						
			DC	●	●	●			Integrated
LS	No lead wire	With surge suppressor/light	AC	●	●	●	●	●	Integrated
			DC				●	●	Integrated

⚠ Note on model no. selection

Note 1: If the changeover position class is mixed (8), indicate details of the combination at the end of the model. Refer to the following page.

Note 2: 3KA1, 4KA1 and 4KA2 compact terminal box, L and L2 DC voltage, and LS have a built-in surge absorber.

Note 3: With a 24 VDC or less grommet lead wire, the enclosed surge suppressor is a suppression connector. (Refer to page 780)

<Example of model number>

M4KA210-06-M1B-2-AC100V

Ⓐ Model : M4KA2
Ⓑ Solenoid position: 2-position single solenoid
Ⓒ Port size : Rc1/8
Ⓓ Manual override : Locking manual override
Ⓔ Electric connection : Small terminal box, w/o lead wire
Ⓕ Other options : None
Ⓖ Station number : 2 stations
Ⓗ Voltage : 100 VAC 50/60Hz

How to order masking plate kit

M 4KA180 - MP-KIT

* Gasket and set screw attached

Ⓐ Model no.

Ⓐ Model no.
4KA180
4KA280
4KA380
4KA480

How to order mix manifold

· 3 port valve

M 3KA1 8 0 - M5 - 4 - AC100V -

S10	S11	S20	MP
3	0	0	1

S10 = 1 to 3 MP = 4

· 5 port valve

M 4KA3 8 0 - 06 - 7 - AC100V -

S1	S2	S3	S4	S5	MP
2	2	2	1	0	0

S1 = 1, 6 S2 = 2, 5 S3 = 3, 4 S4 = 7

Mix manifold "8"

* Refer to previous page for the others

How to Order Mixed Manifold Models

(1) Indicate the quantity for each function (solenoid position) at the end of the model.
Functions and symbols are indicated below.

S1	S2	S3	S4	S5	MP
2	2	2	1	0	0

- 2 2 2 1 0 0 — Indicate the quantity.

Example: 5 port valve 2-position single solenoid ⟶ S1

· 3 port valve

Symbol	Function (solenoid position)
S10	3 port valve 2-position single solenoid N.C. type
S11	3 port valve 2-position single solenoid N.O. type
S20	3 port valve 2-position double solenoid
MP	Masking plate

· 5 port valve

Symbol	Function (solenoid position)
S1	2-position single solenoid
S2	2-position double solenoid
S3	3-position all ports closed
S4	3-position A/B/R connection
S5	3-position P/A/B connection
MP	Masking plate

(2) Indicate the function (solenoid position) and layout position in the Remarks field.

Solenoid position symbol = ○, ○ th station (Facing the piping port. The 1st station is at left.)

Example: S10 = 1 to 3 (1st to 3rd station are the 3 port valve 2-position single solenoid N.C. type.)
S1 = 1, 6 (1st, 6th station are the 5 port valve 2-position single solenoid.)

(Example of model number 1)
For 3 port valve 4 stations

1	2	3	4
3 port valve 2-position single N.C. type	3 port valve 2-position single N.C. type	3 port valve 2-position single N.C. type	Masking plate
S10	S10	S10	MP

Layout / Symbol

3 port valve 2-position single solenoid (S10) : 3 piece (1st to 3rd station)
Masking plate (MP) : 1 piece (4th station)

⇩

M3KA180-M5-4-100 VAC -

S10	S11	S20	MP
3	0	0	1

S10 = 1 to 3 MP = 4

(Example of model number 2)
For 5 port valve 7 stations

1	2	3	4	5	6	7
2-position single solenoid	2-position double solenoid	3-position all ports closed	3-position all ports closed	2-position double solenoid	2-position single solenoid	3-position A/B/R connection
S1	S2	S3	S3	S2	S1	S4

Layout / Symbol

2-position single solenoid (S1) : 2 piece (1st and 6th station)
2-position double solenoid (S2) : 2 piece (2nd and 5th station)
3-position all ports closed (S3) : 2 piece (3rd and 4th station)
3-position A/B/R connection (S4) : 1 piece (7th station)

⇩

M4KA380-06-7-100 VAC -

S1	S2	S3	S4	S5	MP
2	2	2	1	0	0

S1 = 1, 6 S2 = 2, 5 S3 = 3, 4 S4 = 7

Manifold components explanation and parts

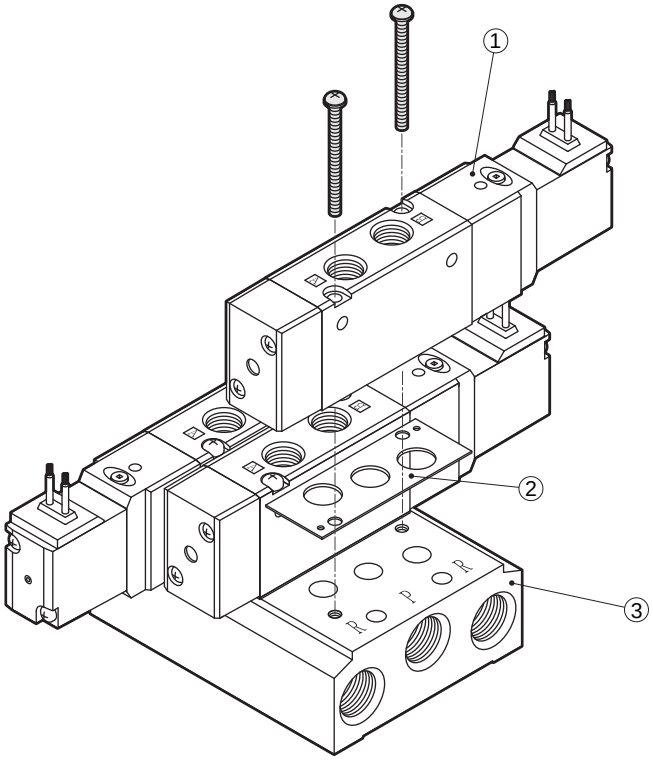

Main parts list

No.	Component name	Model no. (example)	Descriptions
1	Discrete solenoid valve	4KA219-06-DC24V	Discrete solenoid valve 2 set screws Gasket
2	Gasket kit	M4KA210-GASKET-KIT	Gasket 2 set screws
3	Manifold sub-plate kit	M4KA210-06-3-SUB-BASE-KIT	Manifold sub-plate 2 set screws Gasket

Repair parts list

No.	Parts name	Model no.	Applicable model
-	Coil assembly	4K1L- * -COIL- * Electric connection / Voltage	3KA1
			4KA1
			4KA2
		4K3- * -COIL- * Electric connection / Voltage	4KA3 4KA4
-	Spool assembly	4K9- * └ 110	3KA11(1)0, 4KA110
		118	3KA120, 4KA120
		111	4KA130
		112	4KA140
		113	4KA150
		150	4KA210
		126	4KA220
		127	4KA230
		128	4KA240
		129	4KA250
		133	4KA310, 4KA320
		134	4KA330
		135	4KA340
		136	4KA350
		140	4KA410, 4KA420
		141	4KA430
		142	4KA440
		143	4KA450

No.	Parts name	Model no.	Applicable model
-	Piston assembly	4K9- * └ 151	3KA11(1)0, 4KA110 3KA120, 4KA120
		152	4KA130 4KA140 4KA150
		153	4KA210 4KA220
		154	4KA230 4KA240 4KA250
		137	4KA310, 4KA320
		138	4KA330 4KA340 4KA350
		144	4KA410, 4KA420
		145	4KA430 4KA440 4KA450

MEMO

MN3E0 MN4E0
4GA/B
M4GA/B
MN4GA/B
4GA/B (Master)
W4GA/B2
W4GB4
MN3S0 MN4S0
4TB
4L2-4/ LMF0
4SA/B0
4SA/B1
4KA/B
4F
PV5G/ CMF
PV5/ CMF
3MA/B0
3PA/B
P/M/B
NP/NAP/ NVP
4F*0E
HMV HSV
2QV 3QV
SKH
PCD/ FS/FD
Ending

Dimensions CAD

M3KA1-M5

● 3-port valve / port size M5: Grommet lead wire

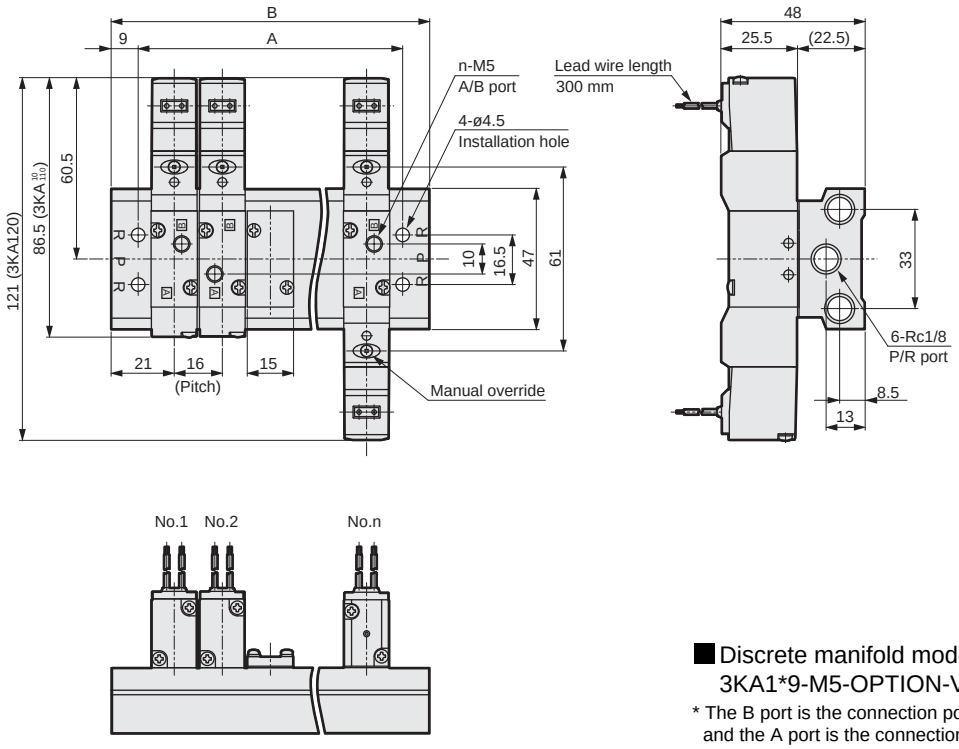

■ Discrete manifold model no.
3KA1*9-M5-OPTION-VOLTAGE

* The B port is the connection port for 3KA119-M5 and the A port is the connection port for 3KA1119-M5.

M4KA1-M5

● 5 port valve / port size M5: Grommet lead wire

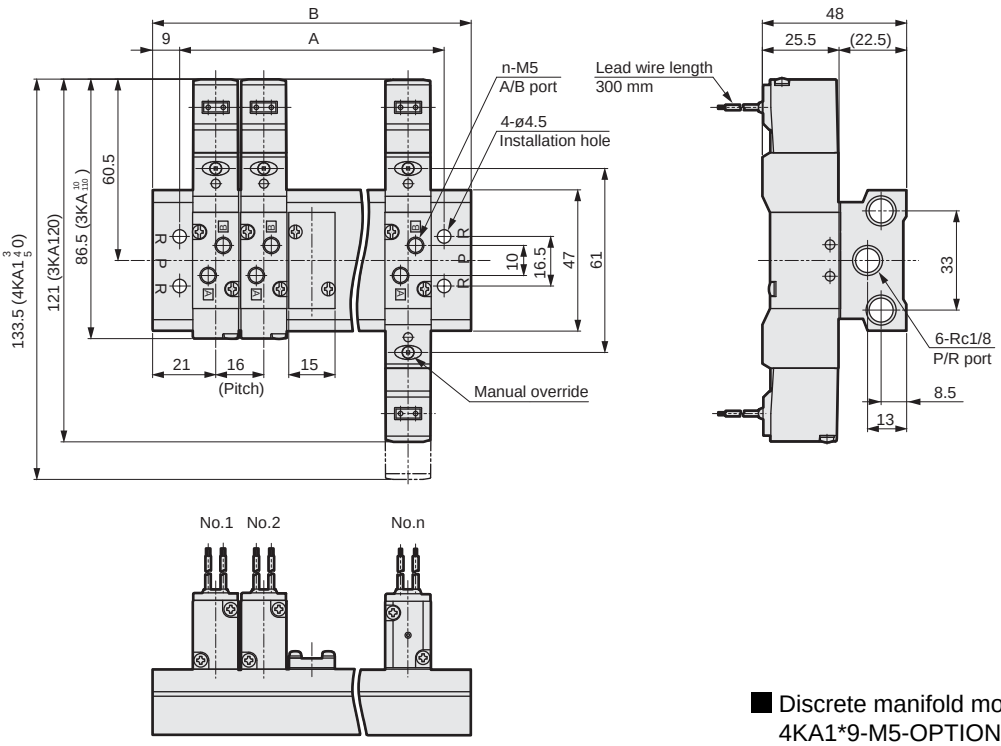

■ Discrete manifold model no.
4KA1*9-M5-OPTION-VOLTAGE

Station number	2	3	4	5	6	7	8	9	10	11	12	13	14	15	16	17	18	19	20
A	40	56	72	88	104	120	136	152	168	184	200	216	232	248	264	280	296	312	328
B	58	74	90	106	122	138	154	170	186	202	218	234	250	266	282	298	314	330	346

Dimensions

M3KA1 (3 port valve)

● ø4, ø6 push-in joint:
(GS4, GS6)

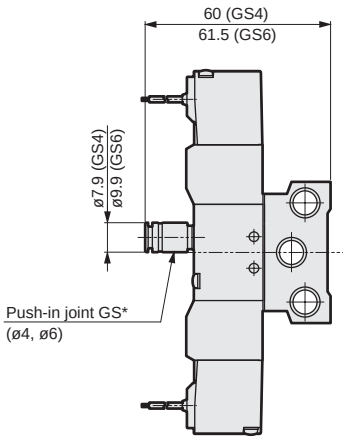

● Small terminal box:
(B, L, L2, LS)

Without indicator light

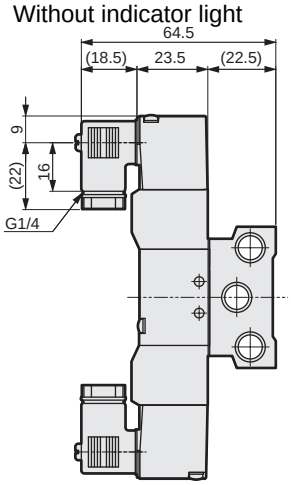

With indicator light

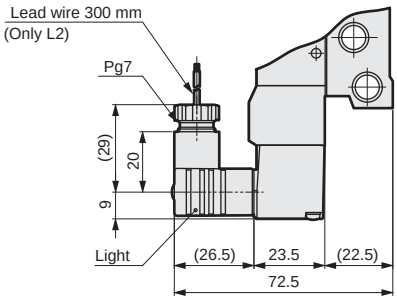

● C-connector:
(C, C1, C0*, C2, C2*, C3)

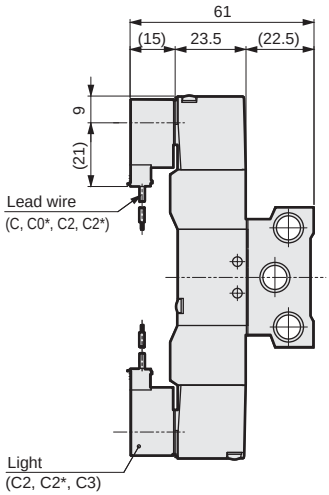

● D-connector:
(D, D1, D0*, D2, D2*, D3)

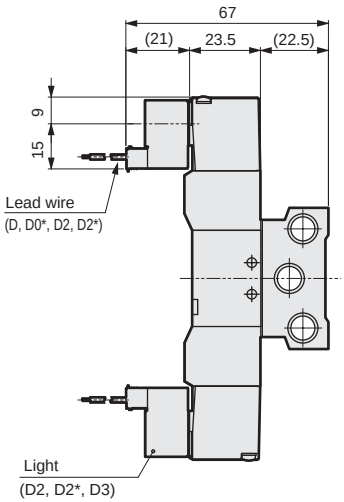

M4KA1 (5 port valve)

● ø4, ø6 push-in joint:
(GS4, GS6)

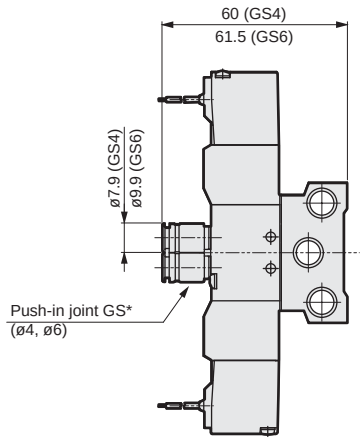

● Small terminal box:
(B, L, L2, LS)

Without indicator light

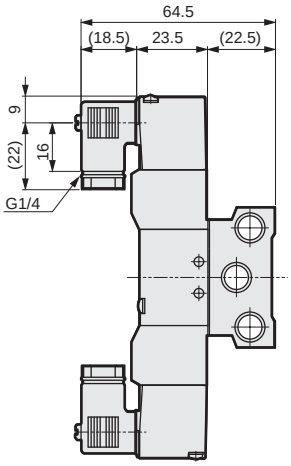

With indicator light

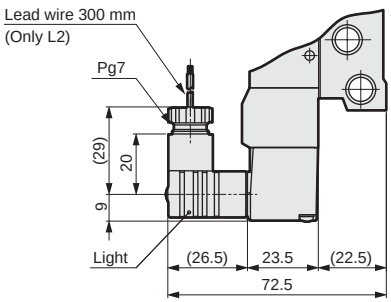

● C-connector:
(C, C1, C0*, C2, C2*, C3)

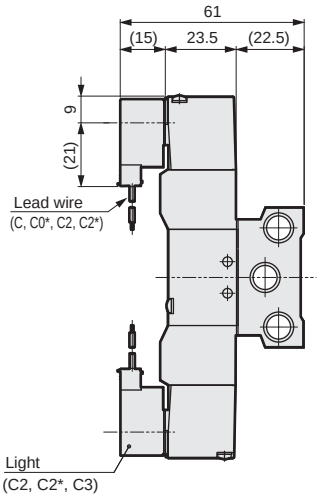

● D-connector:
(D, D1, D0*, D2, D2*, D3)

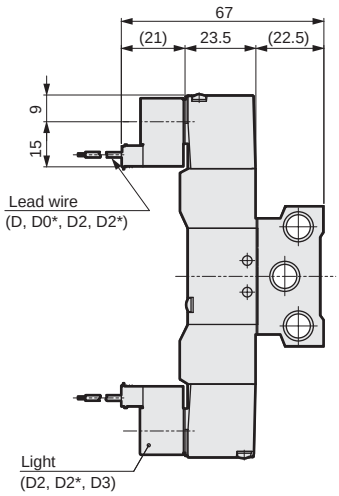

MN3E0 MN4E0
4GA/B
M4GA/B
MN4GA/B
4GA/B (Master)
W4GA/B2
W4GB4
MN3S0 MN4S0
4TB
4L2-4/ LMF0
4SA/B0
4SA/B1
4KA/B
4F
PV5G/ CMF
PV5/ CMF
3MA/B0
3PA/B
P/M/B
NP/NAP/ NVP
4F*0E
HMV HSV
2QV 3QV
SKH
PCD/ FS/FD
Ending

Dimensions

M4KA2-06

● Port size Rc1/8: Grommet lead wire

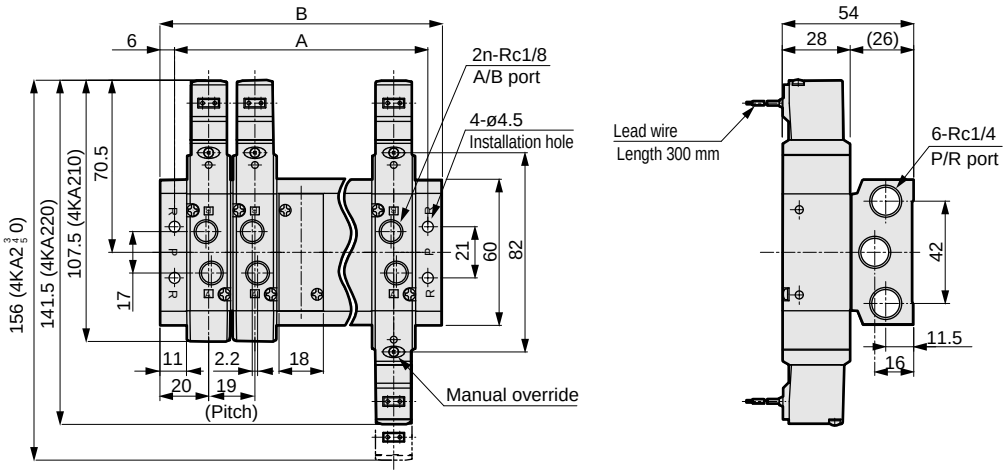

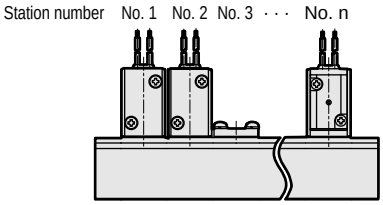

■ Discrete manifold model no.
4KA2*9-06-OPTION-VOLTAGE

Station number	2	3	4	5	6	7	8	9	10	11	12	13	14	15	16	17	18	19	20
A	47	66	85	104	123	142	161	180	199	218	237	256	275	294	313	332	351	370	389
B	59	78	97	116	135	154	173	192	211	230	249	268	287	306	325	344	363	382	401

M4KA3-08

● Port size Rc1/4: Grommet lead wire

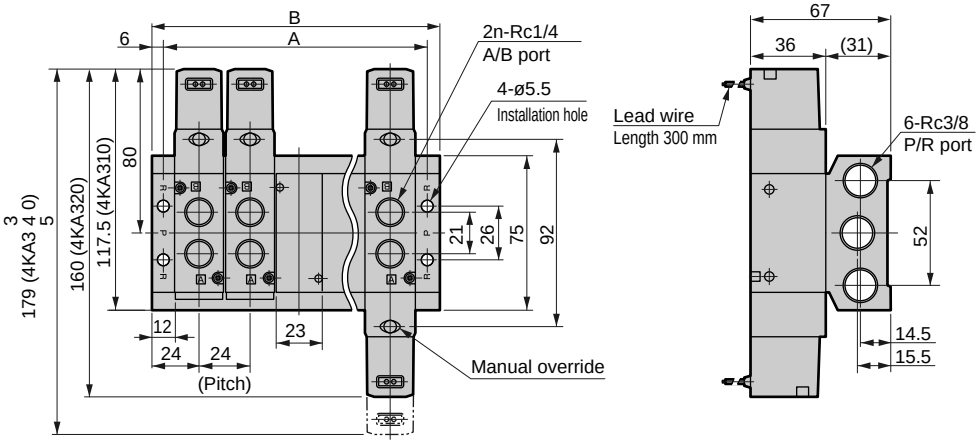

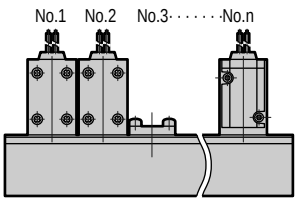

■ Discrete manifold model no.
4KA3*9-08-OPTION-VOLTAGE

Station number	2	3	4	5	6	7	8	9	10	11	12	13	14	15
A	60	84	108	132	156	180	204	228	252	276	300	324	348	372
B	72	96	120	144	168	192	216	240	264	288	312	336	360	384

Dimensions

M4KA2

● ø6, ø8 push-in joint:
(GS6, GS8)

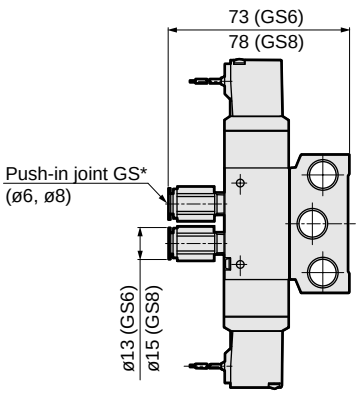

● Small terminal box:
(B, L, L2, LS)

Without indicator light

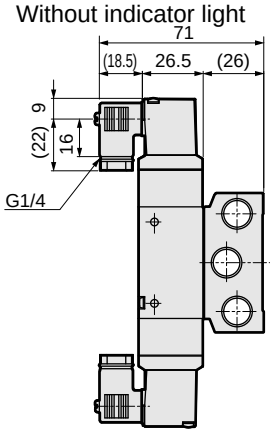

With indicator light

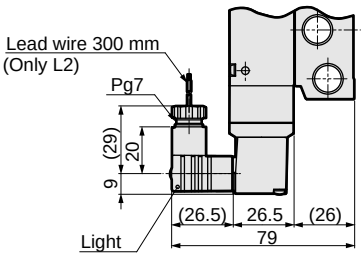

● C-connector:
(C, C1, C0*, C2, C2*, C3)

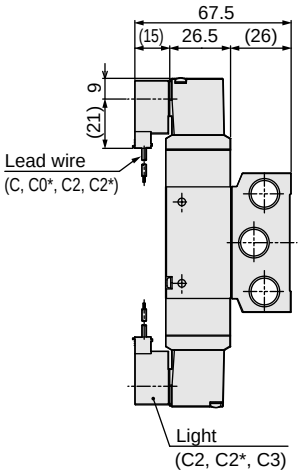

● D-connector:
(D, D1, D0*, D2, D2*, D3)

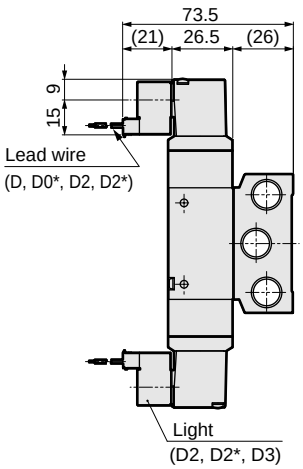

M4KA3

● ø8, ø10 push-in joint:
(GS8, GS10)

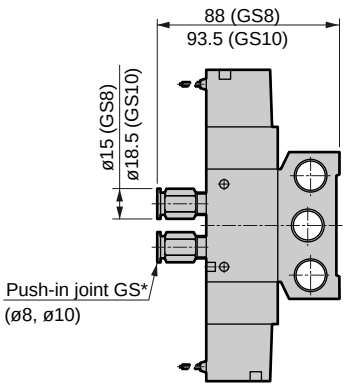

● Small terminal box:
(B, L, L2, LS)

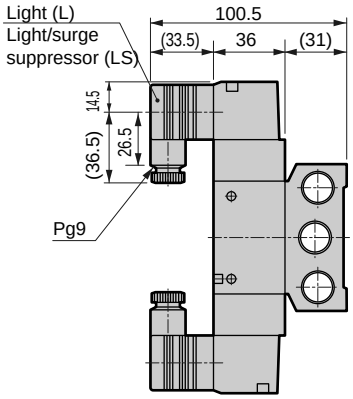

● C-connector:
(C, C1, C0*, C2, C2*, C3)

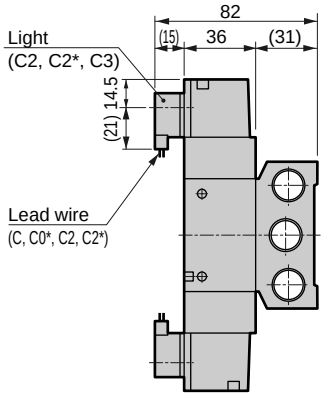

● D-connector:
(D, D1, D0*, D2, D2*, D3)

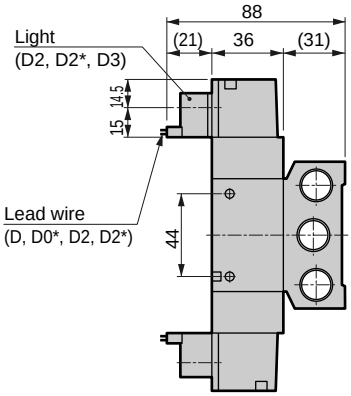

MN3E0
MN4E0
4GA/B
M4GA/B
MN4GA/B
4GA/B (Master)
W4GA/B2
W4GB4
MN3S0
MN4S0
4TB
4L2-4/ LMF0
4SA/B0
4SA/B1
4KA/B
4F
PV5G/ CMF
PV5/ CMF
3MA/B0
3PA/B
P/M/B
NP/NAP/ NVP
4F*0E
HMV
HSV
2QV
3QV
SKH
PCD/ FS/FD
Ending

Dimensions

M4KA4-10

● Port size Rc3/8: Grommet lead wire

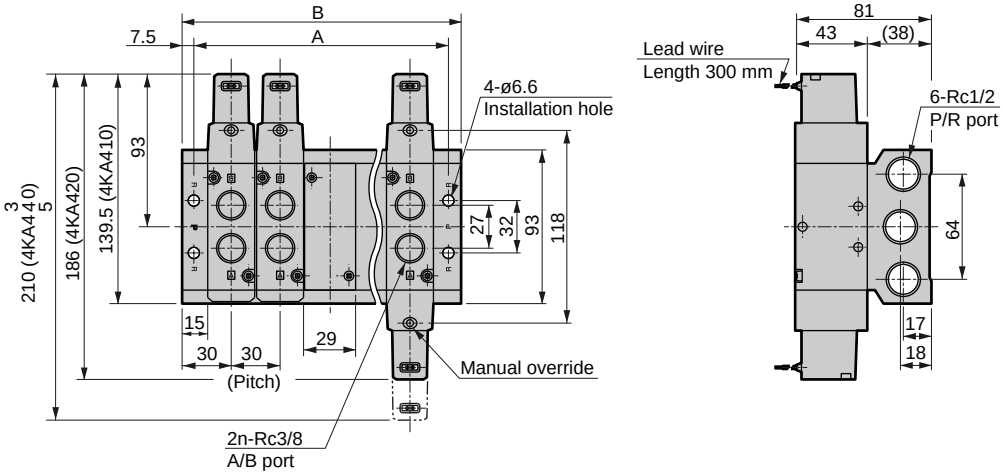

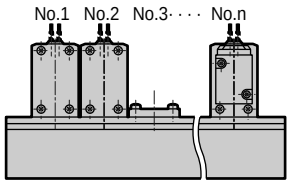

■ Discrete manifold model no.
4KA4*9-10-OPTION-VOLTAGE

Station number	2	3	4	5	6	7	8	9	10	11	12
A	75	105	135	165	195	225	255	285	315	345	375
B	90	120	150	180	210	240	270	300	330	360	390

Dimensions

M4KA4

● Push-in joint ø10, ø12 :
(GS10, GS12)

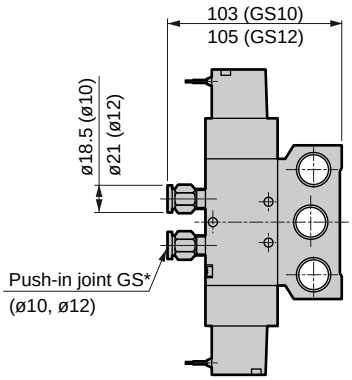

● Small terminal box:
(B, L, LS)

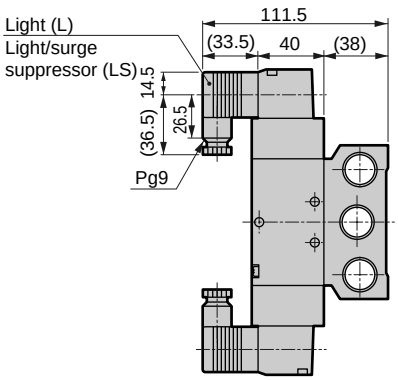

● C-connector:
(C, C1, C0*, C2, C2*, C3)

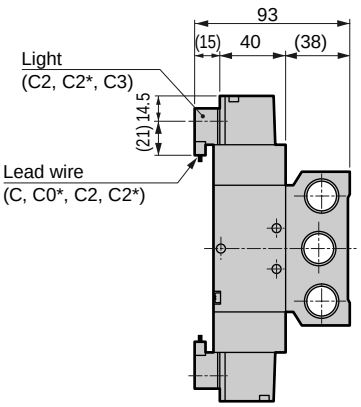

● D-connector:
(D, D1, D0*, D2, D2*, D3)

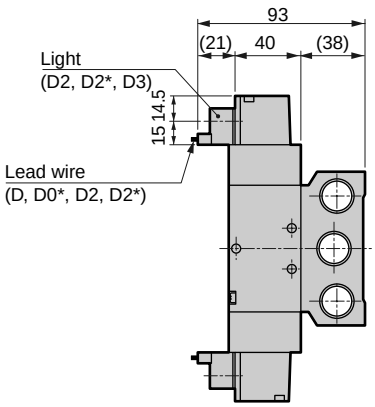

Individual wiring manifold Sub-plate porting 4, 5 port pilot operated valve pneumatic valve

M4KB1/2/3/4 Series

● Applicable cylinder bore size: ø20 to ø160 CE Refer to Intro 17 for details. RoHS CAD

JIS symbol

● 5 port valve
2-position single solenoid

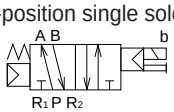

● 5 port valve
2-position double solenoid

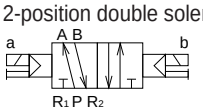

● 5 port valve
3-position all ports closed

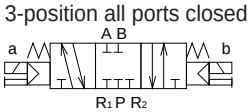

● 5 port valve
3-position A/B/R connection

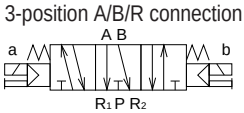

● 5 port valve
3-position P/A/B connection

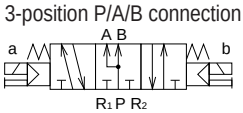

● External pilot

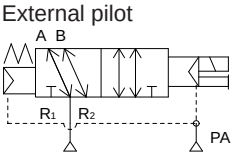

(2-position single solenoid)

Common specifications

Descriptions	
Manifold method	Manifold integrated
Manifold type	Common supply, common exhaust
Station number	Note 1 2 to 20 stations
Type of valve/operation method	Pilot operated soft spool valve
Working fluid	Compressed air
Max. working pressure MPa	0.70
Min. working pressure MPa	Refer to the following individual specifications.
Withstanding pressure MPa	1.05
Ambient temperature °C	-5 to 50 (no freezing)
Fluid temperature °C	5 to 50
Lubrication	Not required
Protective structure	Dust proof
Vibration/impact m/s²	50 or less / 300 or less
Working environment	Containing corrosive gas is impermissible.

Note 1: The max. number of stations for 4KB3 is 15 and for 4KB4 is 12.
Note 2: The working pressure range is 0 to 0.7 MPa when the external pilot (option symbol: K) is selected. Set the external pilot pressure between 0.2 and 0.7 MPa.

Electric specifications

Descriptions			4KB1/2	4KB3/4
Rated voltage V	AC		100, 200 (50/60 Hz)	
	DC		24	
Rated voltage fluctuation range			±10%	
Starting current A	AC	100 V	0.056/0.044	0.046/0.042
	AC	200 V	0.028/0.022	0.023/0.021
	DC	24 V	-	
Holding current A	AC	100 V	0.028/0.022	0.023/0.021
	AC	200 V	0.014/0.011	
	DC	24 V	0.075	
Power consumption W Value in ( ) are with indicator light	AC	100 V	1.8 / 1.4 (1.8 / 1.5)	1.6 / 1.3 (1.8 / 1.5)
	AC	200 V	1.8 / 1.4 (1.8 / 1.5)	1.6 / 1.3 (1.8 / 1.5)
	DC	24 V	1.8 (2.0)	
Heat proof class			B (molded coil)	
Temperature rise °C			43	30

Remarks: The 100 VAC 50/60 Hz rated voltage can be used at 110 VAC 60 Hz, and 200 VAC 50/60 Hz can be used at 220 VAC 60 Hz.

Individual specifications

Descriptions			4KB1	4KB2	4KB3	4KB4
Min. working pressure MPa	2-position	Single solenoid	0.15	0.15	0.15	0.15
		Double solenoid		0.10	0.10	0.10
	3-position		0.20	0.20	0.20	0.20
Port size Note 1	A/B port		M5, Rc1/8 Push-in joint ø6	Rc1/8, Rc1/4 Push-in joint ø6, ø8	Rc1/4, Rc3/8 Push-in joint ø6, ø10	Rc3/8, Rc1/2 Push-in joint ø10, ø12
	P/R1/R2 port		Rc1/8	Rc1/4	Rc3/8	Rc1/2
Response time Note 2 ms	2-position		30 or less	30 or less	30 or less	30 or less
	3-position		60 or less	60 or less	60 or less	60 or less

Note 1: G threads and NPT threads are available for the piping port threads. Contact CKD for information.
Note 2: Response time is the value when supply pressure 0.5 MPa, not lubricated and ON. The value varies depending on pressure and quality of lubricant.

Flow characteristics

Model no.	Solenoid position		C (dm^3/ (s·bar))	b
4KB1	2-position		0.71	0.25
	3-position	All ports closed	0.60	0.23
		A/B/R connection	0.81	0.25
		P/A/B connection	0.67	0.32
4KB2	2-position		2.1	0.13
	3-position	All ports closed	1.8	0.11
		A/B/R connection	2.0	0.17
		P/A/B connection	1.8	0.23
4KB3	2-position		4.5	0.11
	3-position	All ports closed	4.4	0.21
		A/B/R connection	4.8	0.18
		P/A/B connection	4.3	0.20
4KB4	2-position		8.9	0.22
	3-position	All ports closed	8.9	0.24
		A/B/R connection	9.4	0.23
		P/A/B connection	8.6	0.20

Note 1: Effective sectional area S and sonic conductance C are converted as S ≒ 5.0 x C.

Ozone proof specifications (Ending 5)

** -Voltage - P11

Coolant proof specifications

- Special structure with excellent oil proof and water proof properties

** - A - Station number - Voltage

Copper and PTFE free

- Copper and PTFE material not used for flow path

** -Voltage - P6

M4KB1 to 4 Series

Individual wiring manifold: Sub-plate porting

How to order

● Discrete solenoid valve for manifold

4KB1 1 9 - 00 - M1 B ——— AC100V * Gasket and set screw attached

Note 6, 7

● Manifold

M 4KB2 1 0 - 06 - M1 B - 5 - AC100V - 2 2 0 0 0 1

When selecting the mixed manifold, indicate the quantity for each valve function. Refer to the following page.

Ⓐ Model no. Ⓑ Solenoid position Ⓒ Port size Ⓓ Manual override Ⓔ Electric connection Ⓕ Other options Ⓖ Station number Ⓗ Voltage

* Refer to page 781 for the circuit diagram of the type with surge suppressor and light.

Symbol	Descriptions		Ⓐ Model no. 4KB1	4KB2	4KB3	4KB4
Ⓑ Solenoid position						
1	2-position single solenoid		●	●	●	●
2	2-position double solenoid		●	●	●	●
3	3-position all ports closed		●	●	●	●
4	3-position A/B/R connection		●	●	●	●
5	3-position P/A/B connection		●	●	●	●
8	Mix manifold	Note 1	●	●	●	●
Ⓒ Port size						
Port	A/B port		P/R1/R2 port (1)=Rc1/8	(2)=Rc1/4	(3)=Rc3/8	(4)=Rc1/2
M5	M5		(1)			
06	Rc1/8		(1)	(2)		
08	Rc1/4			(2)	(3)	
10	Rc3/8				(3)	(4)
15	Rc1/2					(4)
M5Y	M5 (Rear)		(1)			
06Y	Rc1/8 (Rear)			(2)		
08Y	Rc1/4 (Rear)				(3)	
10Y	Rc3/8 (Rear)					(4)
H6	ø6 push-in joint		(1)	(2)		
H8	ø8 push-in joint			(2)	(3)	
H10	ø10 push-in joint				(3)	(4)
H12	ø12 push-in joint					(4)
M5CE	M5	Note 2	(1)			
06CE	Rc1/8	Note 2	(1)			
H6CE	ø6 push-in joint	Note 2	(1)			
Ⓓ						
Blank	Non-locking manual override		●	●	●	●
M1	Locking manual override		●	●	●	●
Ⓔ Electric connection						
Grommet lead wire						
Blank	Grommet lead wire (300 mm)		●	●	●	●
Small terminal box						
B	No lead wire		●	●	●	●
L	No lead wire	Refer to <Table 1> on the left. Note 4				
L2	Lead wire length (300 mm)					
LS	No lead wire with surge suppressor/light					
C-connector (lead wire lateral)						
C	Lead wire length (300 mm)		●	●	●	●
C00	Lead wire length (500 mm)		●	●	●	●
C01	Lead wire length (1000 mm)		●	●	●	●
C02	Lead wire length (2000 mm)		●	●	●	●
C03	Lead wire length (3000 mm)		●	●	●	●
C1	No lead wire		●	●	●	●
C2	Lead wire length (300 mm)	with surge suppressor/light	●	●	●	●
C20	Lead wire length (500 mm)	with surge suppressor/light	●	●	●	●
C21	Lead wire length (1000 mm)	with surge suppressor/light	●	●	●	●
C22	Lead wire length (2000 mm)	with surge suppressor/light	●	●	●	●
C23	Lead wire length (3000 mm)	with surge suppressor/light	●	●	●	●
C3	No lead wire	with surge suppressor/light	●	●	●	●
D-connector (lead wire upward)						
D	Lead wire length (300 mm)		●	●	●	●
D00	Lead wire length (500 mm)		●	●	●	●
D01	Lead wire length (1000 mm)		●	●	●	●
D02	Lead wire length (2000 mm)		●	●	●	●
D03	Lead wire length (3000 mm)		●	●	●	●
D1	No lead wire		●	●	●	●
D2	Lead wire length (300 mm)	with surge suppressor/light	●	●	●	●
D20	Lead wire length (500 mm)	with surge suppressor/light	●	●	●	●
D21	Lead wire length (1000 mm)	with surge suppressor/light	●	●	●	●
D22	Lead wire length (2000 mm)	with surge suppressor/light	●	●	●	●
D23	Lead wire length (3000 mm)	with surge suppressor/light	●	●	●	●
D3	No lead wire	with surge suppressor/light	●	●	●	●
Ⓕ						
Blank	No option		●	●	●	●
K	External pilot (Only if of port size Rc1/8)	Note 3	●			
S	With surge suppressor	Note 5	●	●	●	●
Ⓖ						
2 to 12	2 to 12 stations					●
2 to 15	2 to 15 stations				●	
2 to 20	2 to 20 stations		●	●		
Ⓗ Voltage						
AC100V	100 VAC 50/60Hz	Standard	●	●	●	●
AC200V	200 VAC 50/60Hz	Standard	●	●	●	●
DC24V	24 VDC	Standard	●	●	●	●
AC110V	110 VAC 50/60Hz	Option	●	●	●	●
AC220V	220 VAC 50/60Hz	Option	●	●	●	●
DC12V	12 VDC	Option	●	●	●	●

<Table 1> Small terminal box L/L2/LS table

Symbol	Descriptions			4KB1	4KB2	4KB3	4KB4	Surge suppressor
L	No lead wire	With light	AC	●	●	●	●	
			DC			●	●	
		With surge suppressor/light	AC					
			DC	●	●			Integrated
L2	With lead wire (300 mm)	With light	AC	●	●			
			DC					
		With surge suppressor/light	AC					
			DC	●	●			Integrated
LS	No lead wire	With surge suppressor/light	AC	●	●	●	●	Integrated
			DC			●	●	Integrated

Note on model no. selection

Note 1: If the changeover position class is mixed (8), indicate details of the combination at the end of the model. Refer to the following page.
Note 2: A CE mark indicates common pilot exhaust. (The maximum number of stations is 10.)
Note 3: The max. number of stations for the external pilot (K) is 10. Consult with CKD for vacuum applications.
Note 4: 4KB1 and 4KB2 compact terminal box, L and L2 DC voltage, and LS have a built-in surge absorber.
Note 5: With a 24 VDC or less grommet lead wire, the enclosed surge suppressor is a suppression connector. (Refer to page 780.)
Note 6: When ordering the CE discrete manifold solenoid valve, the port size is "00CE".
Note 7: The port size is "00Y" for the discrete solenoid valve for the 4KB1 back porting manifold.

<Example of model number>

M4KB210-06-M1B-2-AC100V

Ⓐ Model : M4KB2
Ⓑ Solenoid position : 2-position single solenoid
Ⓒ Port size : Rc1/8
Ⓓ Manual override : Locking manual override
Ⓔ Electric connection : Small terminal box, w/o lead wire
Ⓕ Other options : None
Ⓖ Station number : 2 stations
Ⓗ Voltage : 100 VAC 50/60Hz

How to order masking plate kit

M 4KB180 - MP-KIT

Ⓐ Model no.

* Gasket and set screw attached

Ⓐ Model no.
4KB180
4KB280
4KB380
4KB480

How to order mix manifold

· 5 port valve

M 4KB3 8 0 - 08 - 7 - AC100V - 2 2 2 1 0 0 (S1 S2 S3 S4 S5 MP)

S1 = 1, 6 S2 = 2, 5 S3 = 3, 4 S4 = 7

Mix manifold "8"

* Refer to previous page for the others

How to Order Mixed Manifold Models

(1) Indicate the quantity for each function (solenoid position) at the end of the model.
Functions and symbols are indicated below.

- 2 2 2 1 0 0 (S1 S2 S3 S4 S5 MP)

Indicate the quantity.

Example: 2-position single solenoid ⟶ S1

Symbol	Function (solenoid position)
S1	2-position single solenoid
S2	2-position double solenoid
S3	3-position all ports closed
S4	3-position A/B/R connection
S5	3-position P/A/B connection
MP	Masking plate

(2) Indicate the function (solenoid position) and layout position in the Remarks field.

Solenoid position symbol = ○, ○ th station (Facing the piping port. The 1st station is at left.)

Example: S1 = 1, 6 (1st, 6th stations are 5 port valve 2-position single solenoid.)

<Example of model number>
For 7 stations

1	2	3	4	5	6	7	····· Layout
2-position single solenoid	2-position double solenoid	3-position all ports closed	3-position all ports closed	2-position double solenoid	2-position single solenoid	3-position A/B/R connection	
S1	S2	S3	S3	S2	S1	S4	····· Symbol

2-position single solenoid (S1) : 2 piece (1st and 6th station)
2-position double solenoid (S2) : 2 piece (2nd and 5th station)
3-position all ports closed (S3) : 2 piece (3rd and 4th station)
3-position A/B/R connection (S4) : 1 piece (7th station)

⇩

M4KB380-08-7-AC100V - 2 2 2 1 0 0 (S1 S2 S3 S4 S5 MP)

S1 = 1, 6 S2 = 2, 5 S3 = 3, 4 S4 = 7

Manifold components explanation and parts list

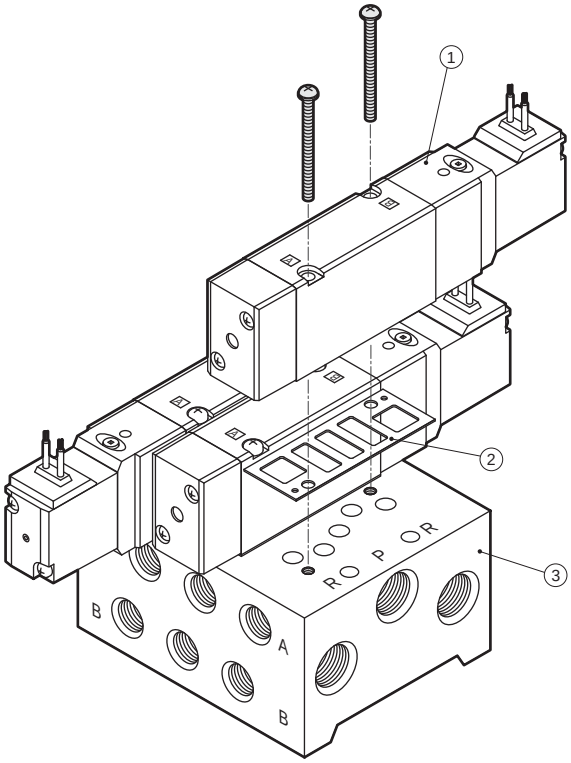

Main parts list

No.	Component name	Model no. (example)	Descriptions
1	Discrete solenoid valve	4KB219-00-DC24V	Discrete solenoid valve 2 set screws Gasket
2	Gasket kit	M4KB210-GASKET-KIT	Gasket 2 set screws
3	Manifold sub-plate kit	M4KB210-06-3-SUB-BASE-KIT	Manifold sub-plate 2 set screws Gasket

Repair parts list

No.	Parts name	Model no.	Applicable model
-	Coil assembly	4K1L- * -COIL- * Electric connection / Voltage	4KB1 4KB2
		4K3- * -COIL- * Electric connection / Voltage	4KB3 4KB4
-	Spool assembly	4K9- * └ 110	4KB110
		118	4KB120
		111	4KB130
		112	4KB140
		113	4KB150
		150	4KB210
		126	4KB220
		127	4KB230
		128	4KB240
		129	4KB250
		133	4KB310/4KB320
		134	4KB330
		135	4KB340
		136	4KB350
		140	4KB410/4KB420
		141	4KB430
		142	4KB440
		143	4KB450

No.	Parts name	Model no.	Applicable model
-	Piston assembly	4K9- * └ 151	4KB110 4KB120
		152	4KB130 4KB140 4KB150
		153	4KB210 4KB220
		154	4KB230 4KB240 4KB250
		137	4KB310/4KB320
		138	4KB330 4KB340 4KB350
		144	4KB410/4KB420
		145	4KB430 4KB440 4KB450

MEMO

MN3E0 MN4E0
4GA/B
M4GA/B
MN4GA/B
4GA/B (Master)
W4GA/B2
W4GB4
MN3S0 MN4S0
4TB
4L2-4/ LMF0
4SA/B0
4SA/B1
4KA/B
4F
PV5G/ CMF
PV5/ CMF
3MA/B0
3PA/B
P/M/B
NP/NAP/ NVP
4F*0E
HMV HSV
2QV 3QV
SKH
PCD/ FS/FD
Ending

Dimensions CAD

M4KB1-M5

● Port size M5: Grommet lead wire

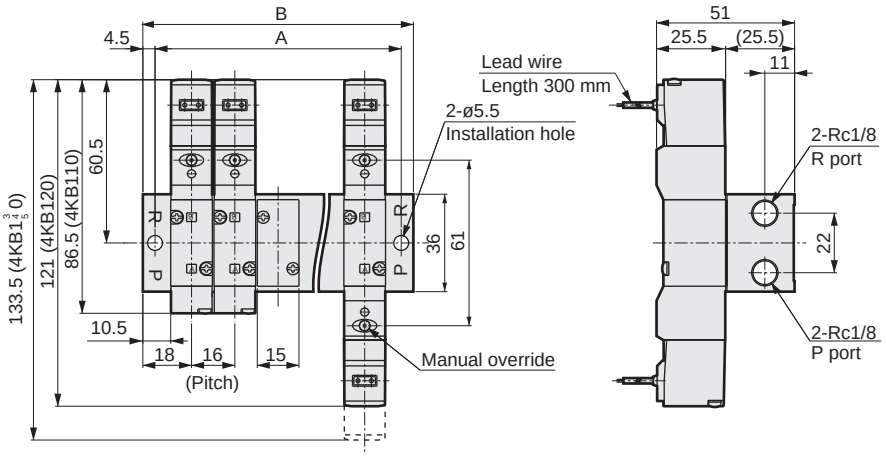

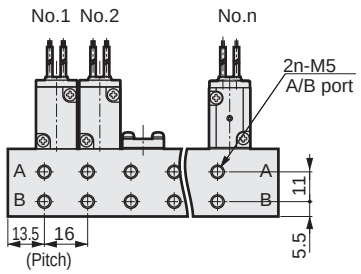

■ Discrete manifold model no.
4KB1*9-00-OPTION-VOLTAGE

Station number	2	3	4	5	6	7	8	9	10	11	12	13	14	15	16	17	18	19	20
A	43	59	75	91	107	123	139	155	171	187	203	219	235	251	267	283	299	315	331
B	52	68	84	100	116	132	148	164	180	196	212	228	244	260	276	292	308	324	340

M4KB1-06

● Port size Rc1/8: Grommet lead wire

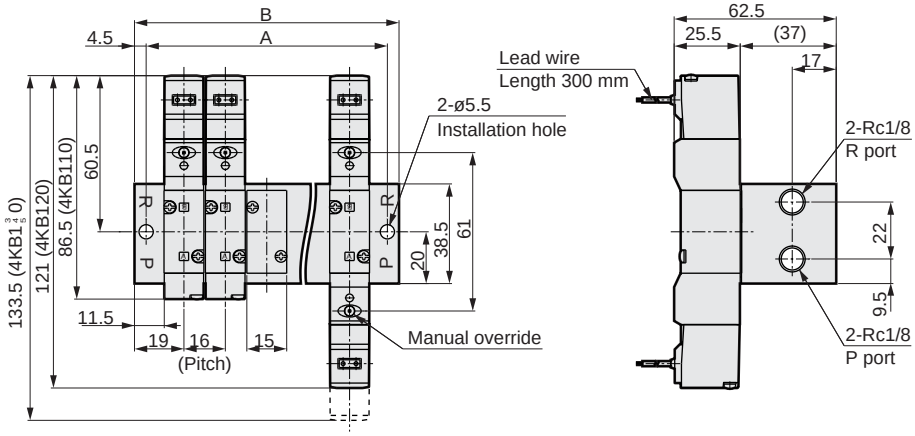

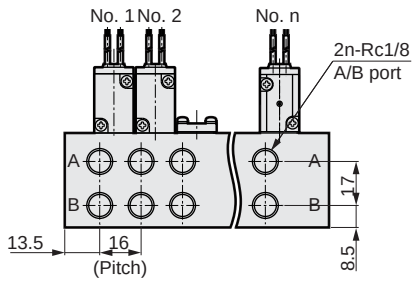

■ Discrete manifold model no.
4KB1*9-00-OPTION-VOLTAGE

Station number	2	3	4	5	6	7	8	9	10	11	12	13	14	15	16	17	18	19	20
A	45	61	77	93	109	125	141	157	173	189	205	221	237	253	269	285	301	317	333
B	54	70	86	102	118	134	150	166	182	198	214	230	246	262	278	294	310	326	342

Dimensions

<For port size M5>

● Small terminal box:
(B, L, L2, LS)

Without indicator light

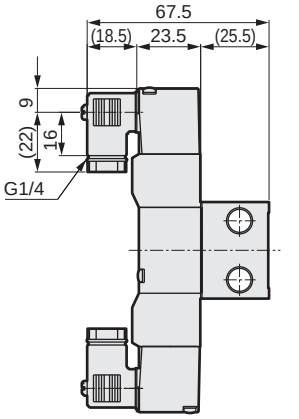

● C-connector:
(C, C1, C0*, C2, C2*, C3)

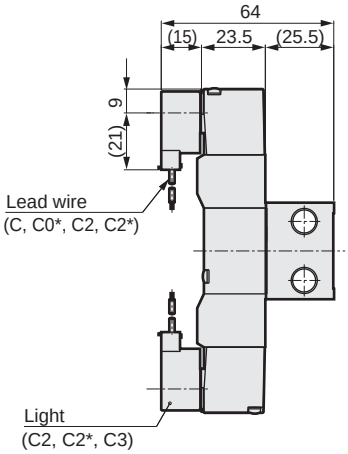

● D-connector:
(D, D1, D0*, D2, D2*, D3)

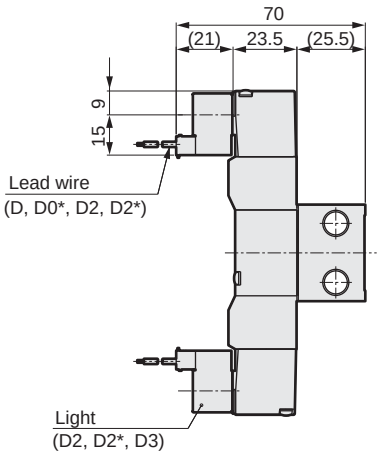

With indicator light

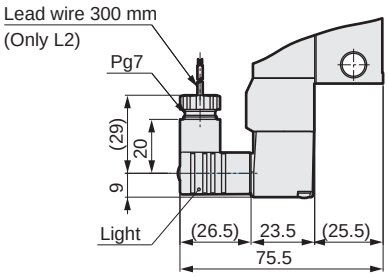

<For port size Rc1/8>

● Small terminal box:
(B, L, L2, LS)

Without indicator light

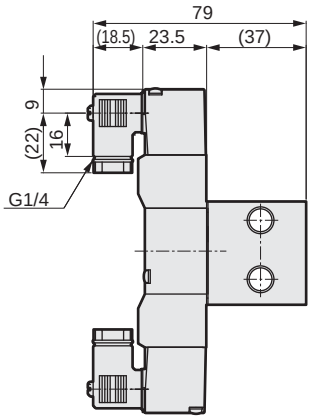

● C-connector:
(C, C1, C0*, C2, C2*, C3)

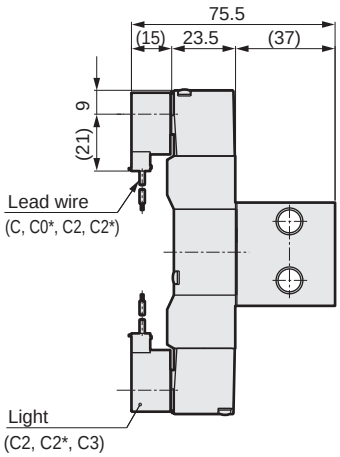

● D-connector:
(D, D1, D0*, D2, D2*, D3)

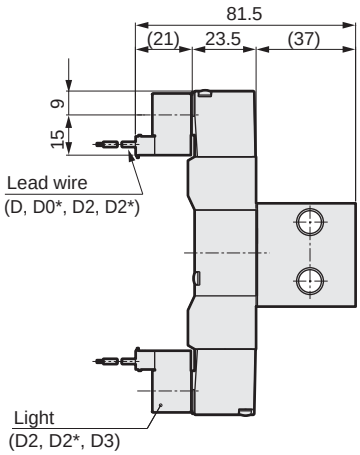

● External pilot: (K)
(Port size Rc1/8, up to 10 stations)

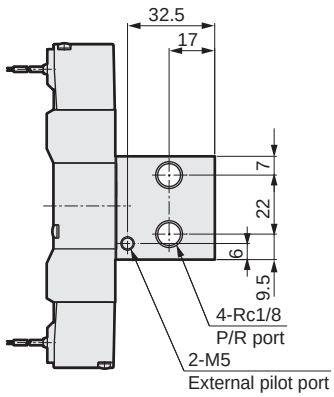

With indicator light

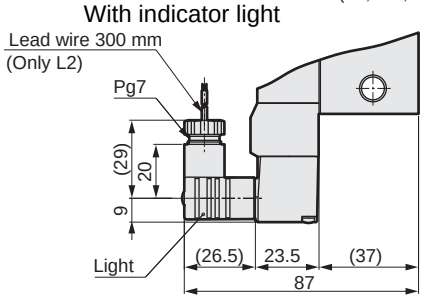

MN3E0 MN4E0
4GA/B
M4GA/B
MN4GA/B
4GA/B (Master)
W4GA/B2
W4GB4
MN3S0 MN4S0
4TB
4L2-4/ LMF0
4SA/B0
4SA/B1
4KA/B
4F
PV5G/ CMF
PV5/ CMF
3MA/B0
3PA/B
P/M/B
NP/NAP/ NVP
4F*0E
HMV HSV
2QV 3QV
SKH
PCD/ FS/FD
Ending

Dimensions CAD

M4KB1-H6

● Port size ø6 push-in joint: Grommet lead wire

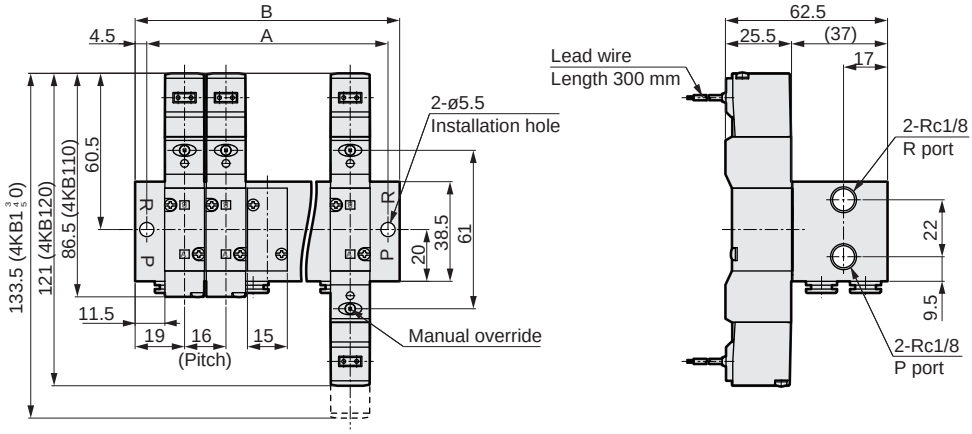

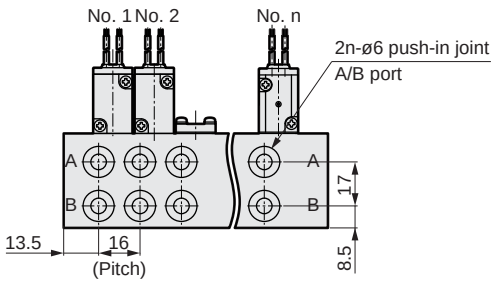

■ Discrete manifold model no.
4KB1*9-00-OPTION-VOLTAGE

Station number	2	3	4	5	6	7	8	9	10	11	12	13	14	15	16	17	18	19	20
A	45	61	77	93	109	125	141	157	173	189	205	221	237	253	269	285	301	317	333
B	54	70	86	102	118	134	150	166	182	198	214	230	246	262	278	294	310	326	342

M4KB1-M5Y

● Port size M5 (back porting): Grommet lead wire

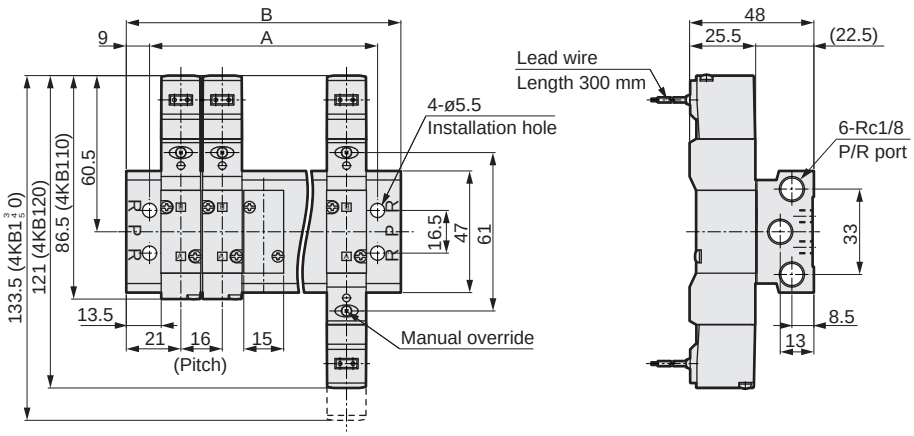

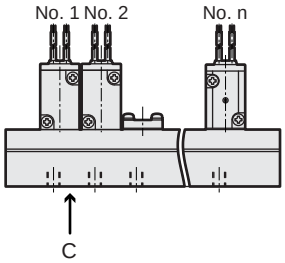

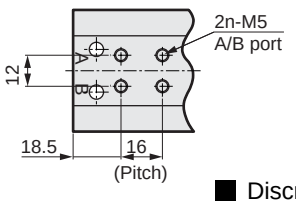

C view

■ Discrete manifold model no.
4KB1*9-00Y-OPTION-VOLTAGE

Station number	2	3	4	5	6	7	8	9	10	11	12	13	14	15	16	17	18	19	20
A	40	56	72	88	104	120	136	152	168	184	200	216	232	248	264	280	296	312	328
B	58	74	90	106	122	138	154	170	186	202	218	234	250	266	282	298	314	330	346

Dimensions

<For port size ø6 push-in joint>

● Small terminal box: (B, L, L2, LS)

Without indicator light

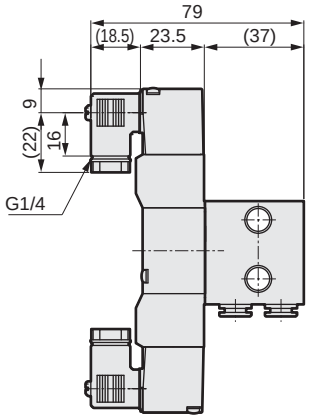

● C-connector:
(C, C1, C0*, C2, C2*, C3)

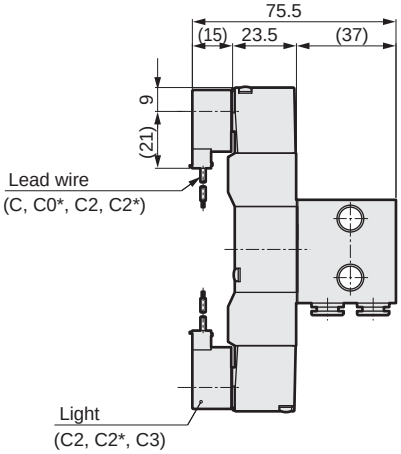

● D-connector:
(D, D1, D0*, D2, D2*, D3)

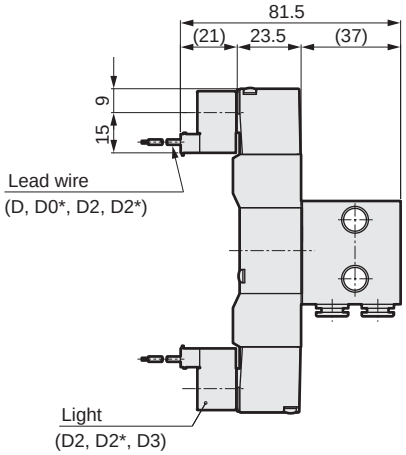

With indicator light

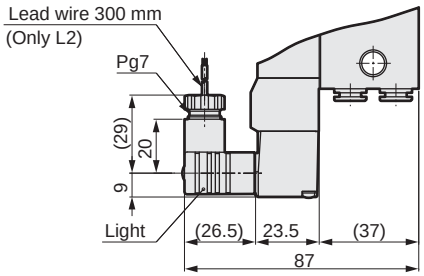

<For port size M5 (back porting)>

● Small terminal box: (B, L, L2, LS)

Without indicator light

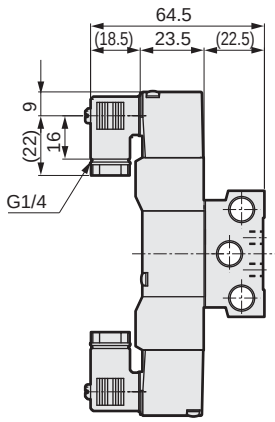

● C-connector:
(C, C1, C0*, C2, C2*, C3)

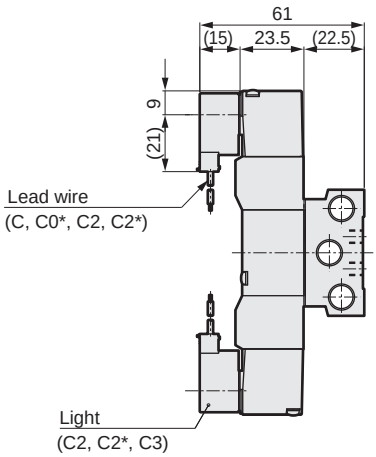

● D-connector:
(D, D1, D0*, D2, D2*, D3)

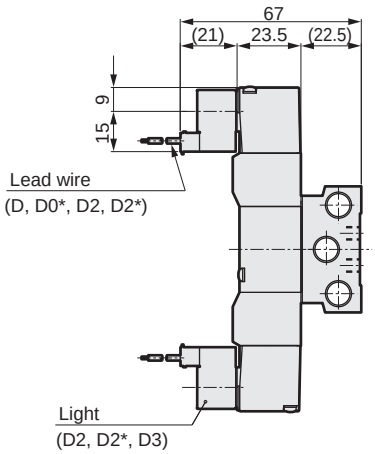

With indicator light

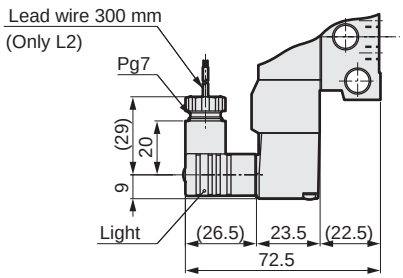

MN3E0 MN4E0
4GA/B
M4GA/B
MN4GA/B
4GA/B (Master)
W4GA/B2
W4GB4
MN3S0 MN4S0
4TB
4L2-4/ LMF0
4SA/B0
4SA/B1
4KA/B
4F
PV5G/ CMF
PV5/ CMF
3MA/B0
3PA/B
P/M/B
NP/NAP/ NVP
4F*0E
HMV HSV
2QV 3QV
SKH
PCD/ FS/FD
Ending

Dimensions

M4KB1-M5CE

● Port size M5 / pilot common exhaust: Grommet lead wire

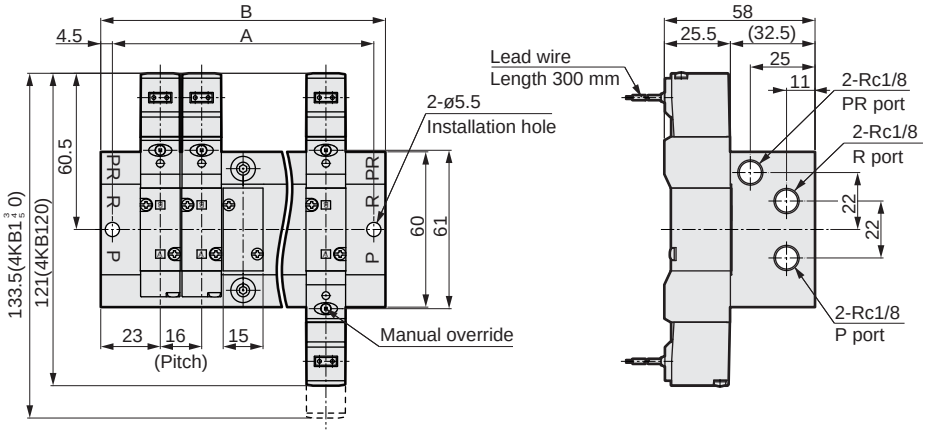

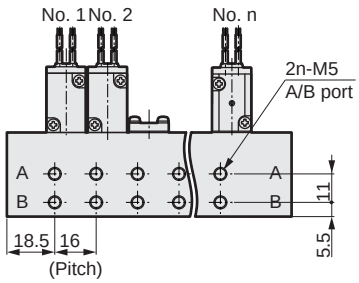

■ Discrete manifold model no.
4KB1*9-00CE-OPTION-VOLTAGE

M4KB1-06CE

● Port size Rc1/8 / pilot common exhaust: Grommet lead wire

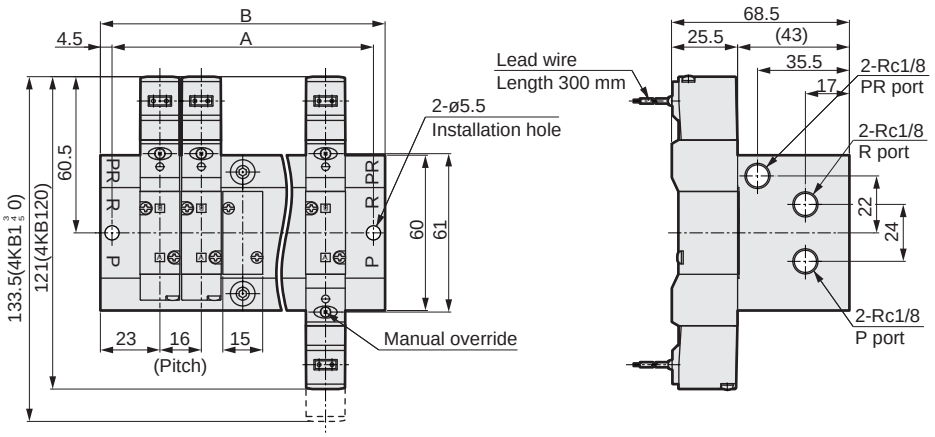

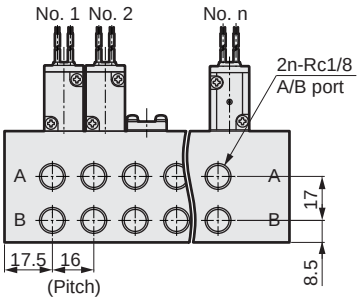

■ Discrete manifold model no.
4KB1*9-00CE-OPTION-VOLTAGE

Station number	2	3	4	5	6	7	8	9	10
A	53	69	85	101	117	133	149	165	181
B	62	78	94	110	126	142	158	174	190

Dimensions

M4KB1-H6CE

● Port size ø6 push-in joint / pilot common exhaust: Grommet lead wire

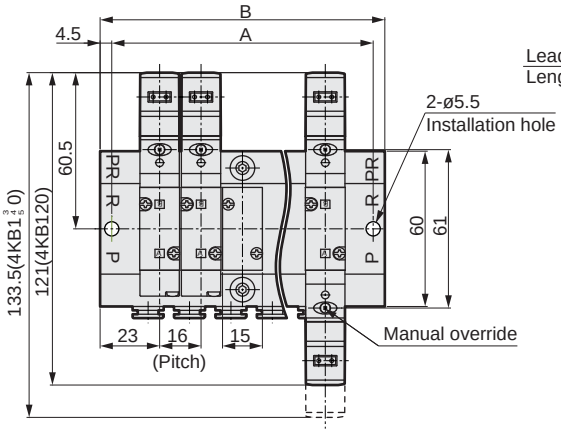

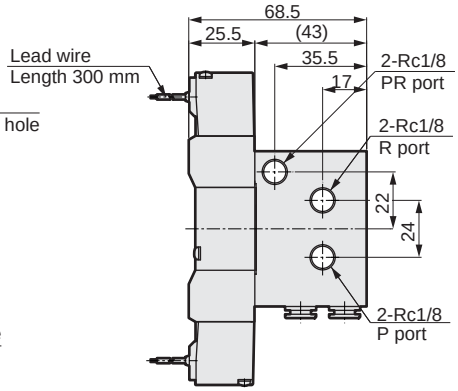

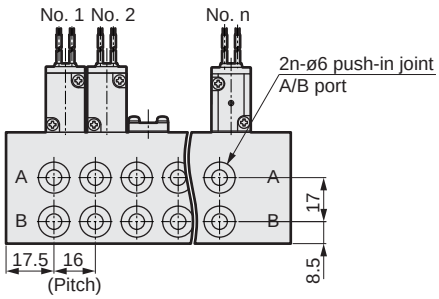

■ Discrete manifold model no.
4KB1*9-00CE-OPTION-VOLTAGE

Station number	2	3	4	5	6	7	8	9	10
A	53	69	85	101	117	133	149	165	181
B	62	78	94	110	126	142	158	174	190

MN3E0 MN4E0
4GA/B
M4GA/B
MN4GA/B
4GA/B (Master)
W4GA/B2
W4GB4
MN3S0 MN4S0
4TB
4L2-4/ LMF0
4SA/B0
4SA/B1
4KA/B
4F
PV5G/ CMF
PV5/ CMF
3MA/B0
3PA/B
P/M/B
NP/NAP/ NVP
4F*0E
HMV HSV
2QV 3QV
SKH
PCD/ FS/FD
Ending

Dimensions CAD

M4KB2-06/08

● Port size Rc1/8, Rc1/4: Grommet lead wire

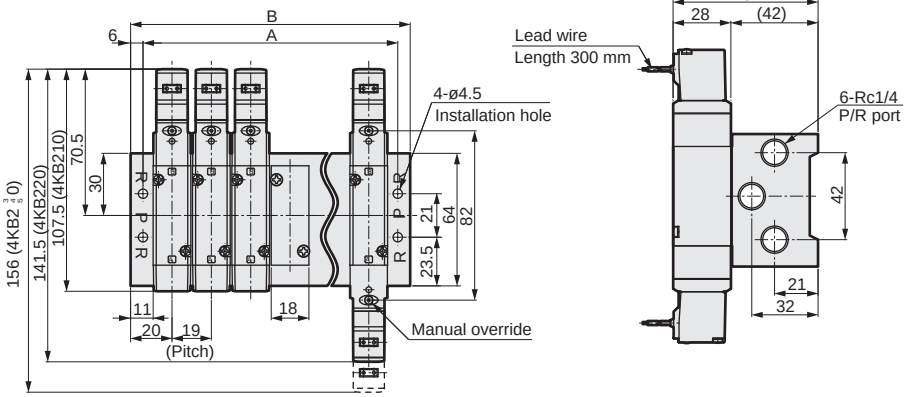

M4KB2-08

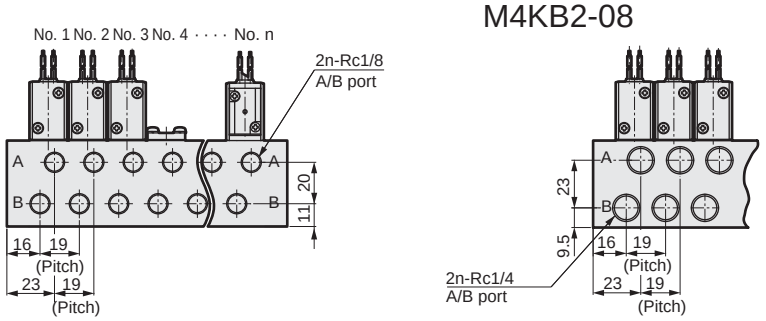

■ Discrete manifold model no.
4KB2*9-00-OPTION-VOLTAGE

M4KB2-06Y

● Port size Rc1/8 (back porting): Grommet lead wire

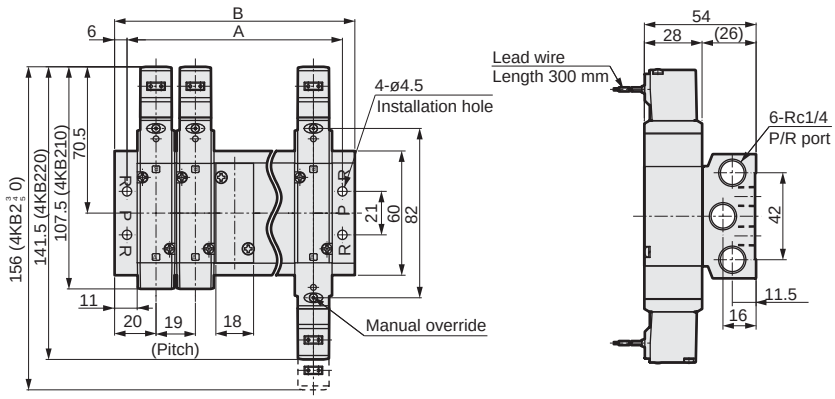

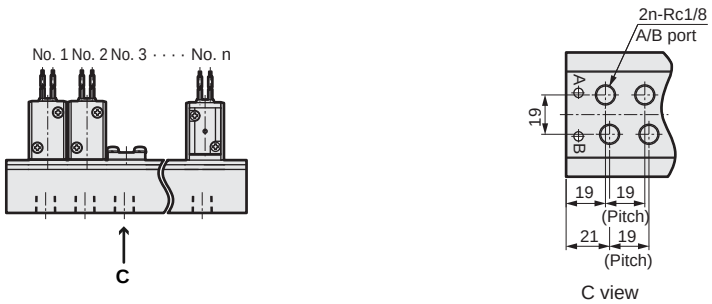

■ Discrete manifold model no.
4KB2*9-00-OPTION-VOLTAGE

Station number	2	3	4	5	6	7	8	9	10	11	12	13	14	15	16	17	18	19	20
A	47	66	85	104	123	142	161	180	199	218	237	256	275	294	313	332	351	370	389
B	59	78	97	116	135	154	173	192	211	230	249	268	287	306	325	344	363	382	401

Dimensions

● ø6, ø8 push-in joint: (H6, H8)

ø6

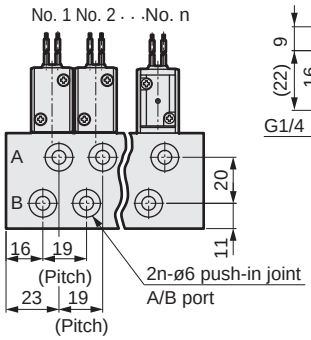

ø8

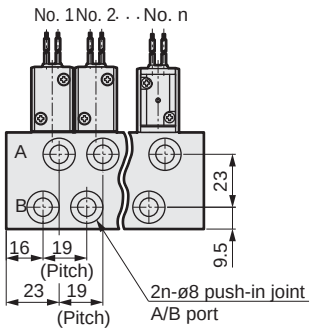

● Small terminal box: (B, L, L2, LS)

Without indicator light

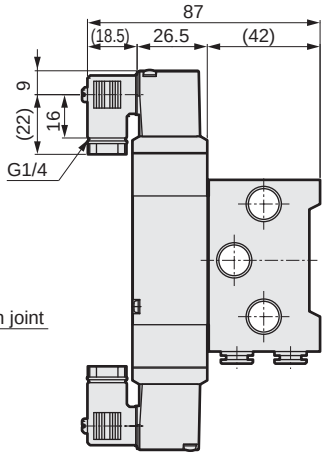

With indicator light

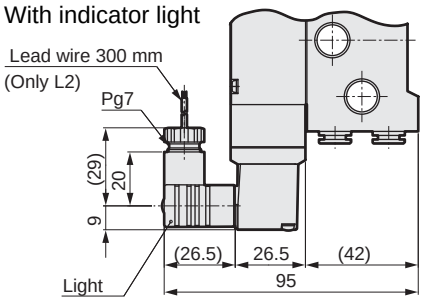

● C-connector: (C, C1, C0*, C2, C2*, C3)

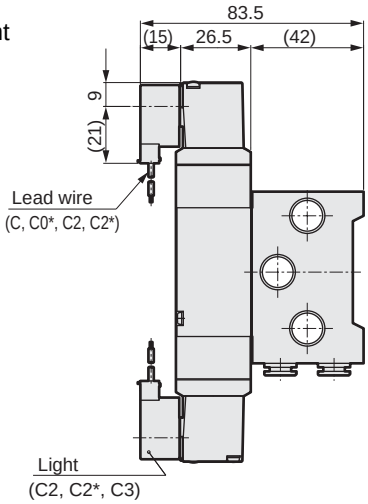

● D-connector: (D, D1, D0*, D2, D2*, D3)

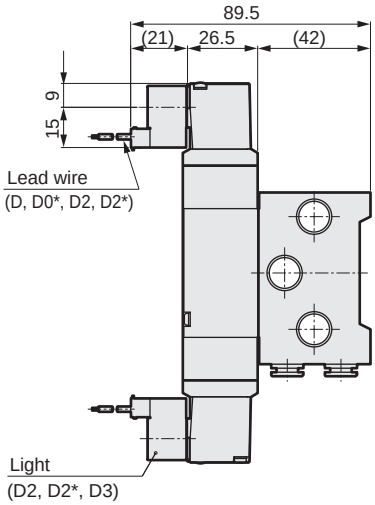

● Port size Rc1/8(back porting)

Without indicator light

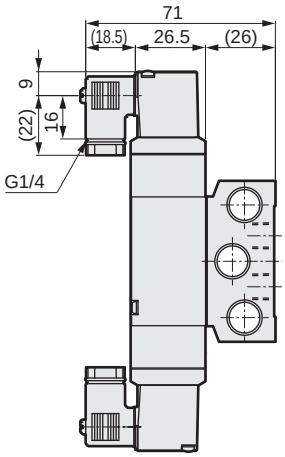

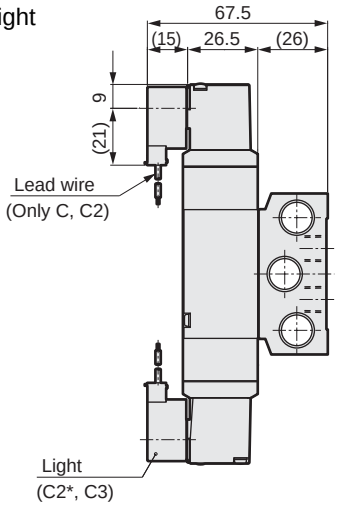

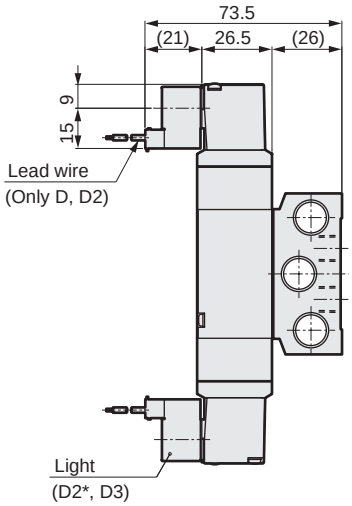

With indicator light

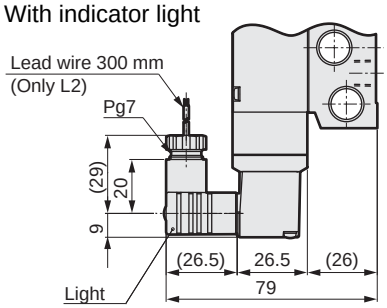

MN3E0 MN4E0
4GA/B
M4GA/B
MN4GA/B
4GA/B (Master)
W4GA/B2
W4GB4
MN3S0 MN4S0
4TB
4L2-4/ LMF0
4SA/B0
4SA/B1
4KA/B
4F
PV5G/ CMF
PV5/ CMF
3MA/B0
3PA/B
P/M/B
NP/NAP/ NVP
4F*0E
HMV HSV
2QV 3QV
SKH
PCD/ FS/FD
Ending

Dimensions

M4KB3-08/10

● Port size Rc1/4, 3/8: Grommet lead wire

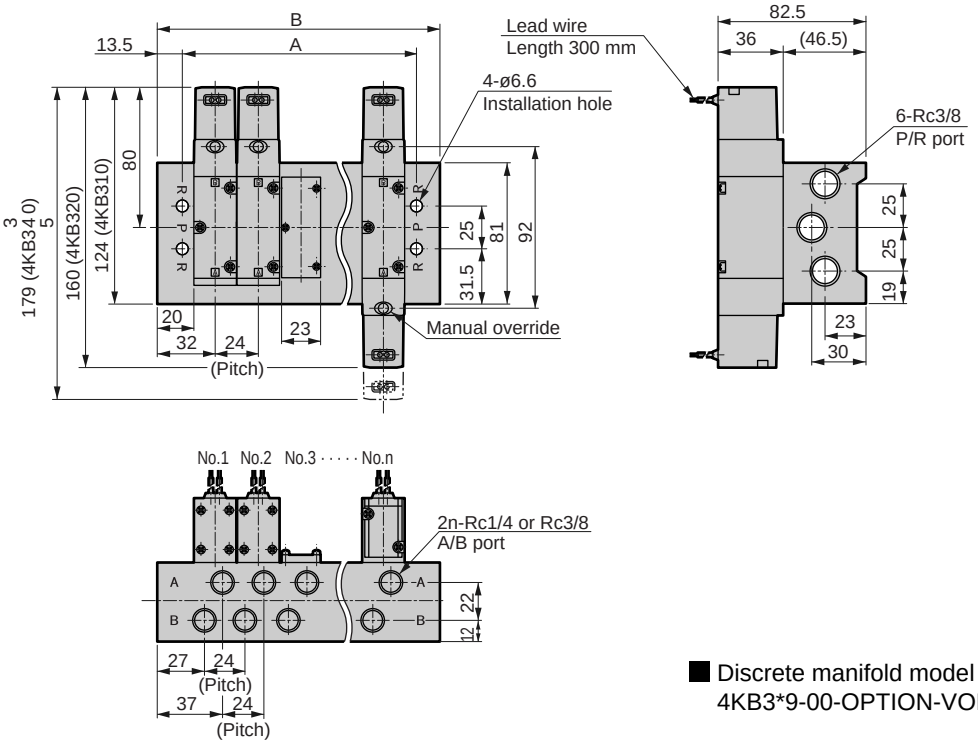

■ Discrete manifold model no.
4KB3*9-00-OPTION-VOLTAGE

Station number	2	3	4	5	6	7	8	9	10	11	12	13	14	15
A	61	85	109	133	157	181	205	229	253	277	301	325	349	373
B	88	112	136	160	184	208	232	256	280	304	328	352	376	400

M4KB3-08Y

● Port size Rc1/4 (back porting): Grommet lead wire

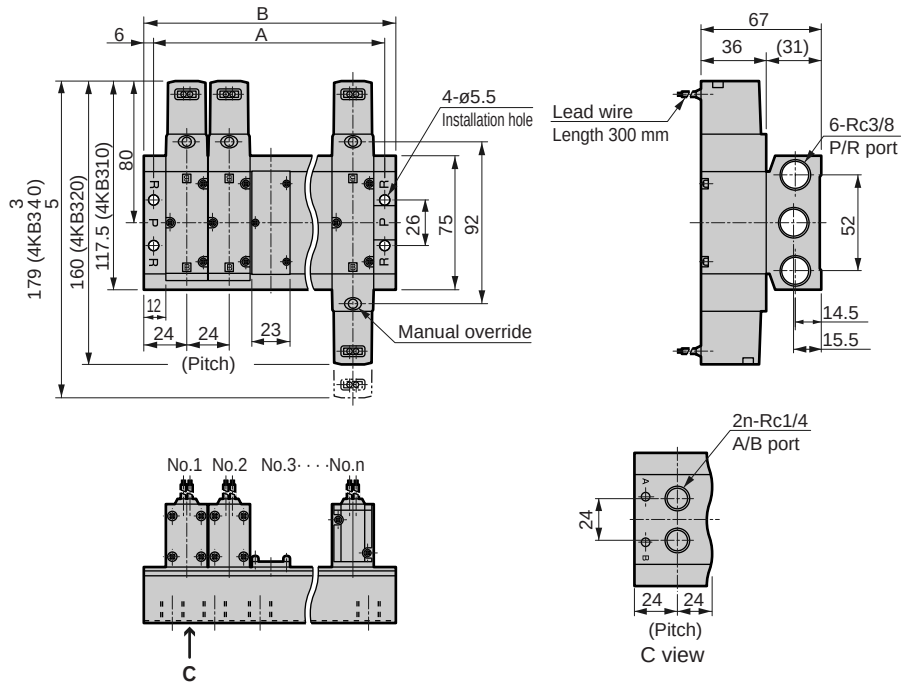

■ Discrete manifold model no.
4KB3*9-00-OPTION-VOLTAGE

Station number	2	3	4	5	6	7	8	9	10	11	12	13	14	15
A	60	84	108	132	156	180	204	228	252	276	300	324	348	372
B	72	96	120	144	168	192	216	240	264	288	312	336	360	384

Dimensions

● ø8, ø10 push-in joint: (H8, H10)

● Terminal box: (B, L, LS)

● C-connector: (C, C1, C0*, C2, C2*, C3)

● D-connector: (D, D1, D0*, D2, D2*, D3)

ø8

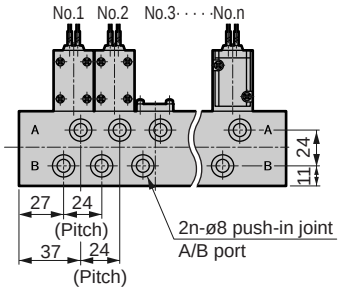

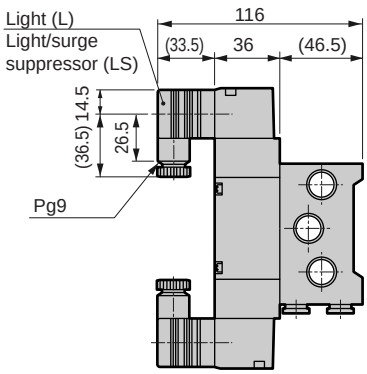

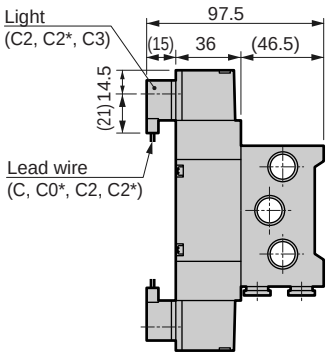

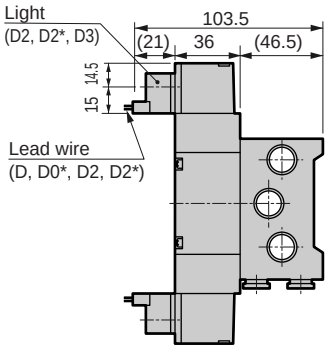

ø10

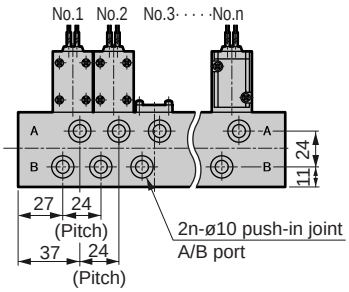

● Port size Rc1/4 (back porting)

● Terminal box: (B, L, LS)

● C-connector: (C, C1, C0*, C2, C2*, C3)

● D-connector: (D, D1, D0*, D2, D2*, D3)

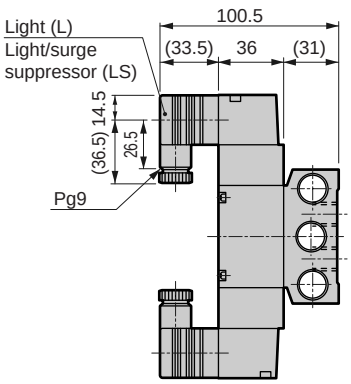

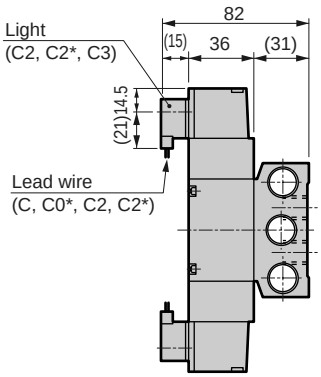

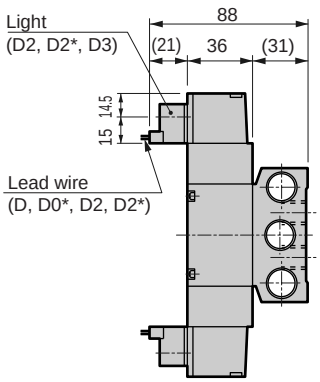

MN3E0 MN4E0
4GA/B
M4GA/B
MN4GA/B
4GA/B (Master)
W4GA/B2
W4GB4
MN3S0 MN4S0
4TB
4L2-4/ LMF0
4SA/B0
4SA/B1
4KA/B
4F
PV5G/ CMF
PV5/ CMF
3MA/B0
3PA/B
P/M/B
NP/NAP/ NVP
4F*0E
HMV HSV
2QV 3QV
SKH
PCD/ FS/FD
Ending

Dimensions

M4KB4-10/15

● Port size Rc3/8, 1/2: Grommet lead wire

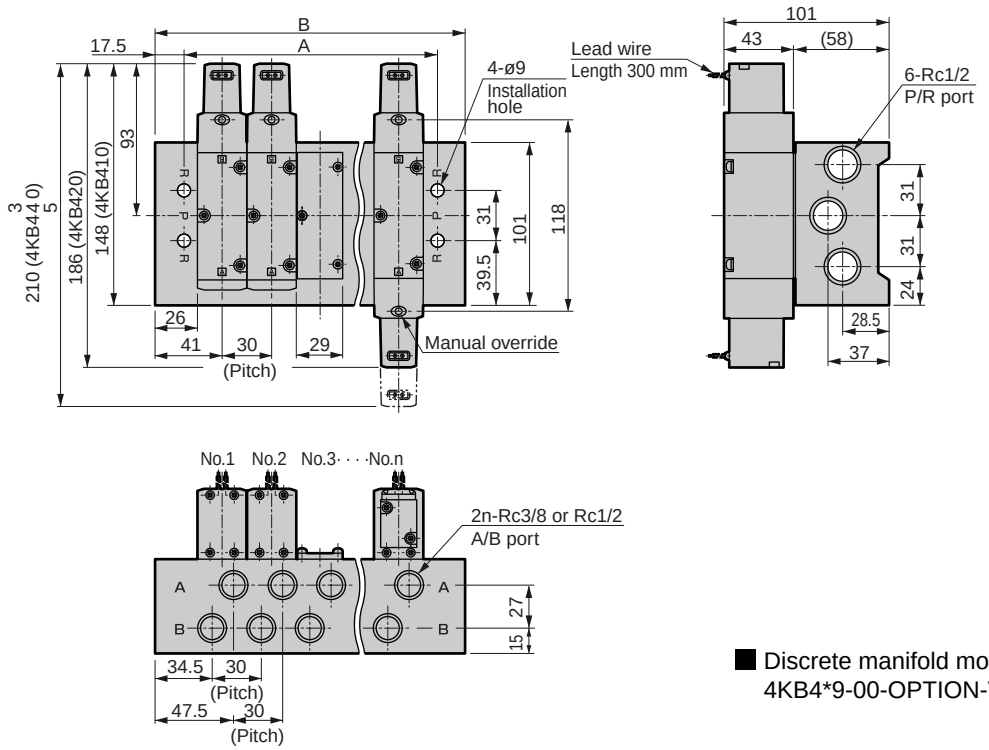

■ Discrete manifold model no.
4KB4*9-00-OPTION-VOLTAGE

Station number	2	3	4	5	6	7	8	9	10	11	12
A	77	107	137	167	197	227	257	287	317	347	377
B	112	142	172	202	232	262	292	322	352	382	412

M4KB4-10Y

● Port size Rc3/8 (back porting): Grommet lead wire

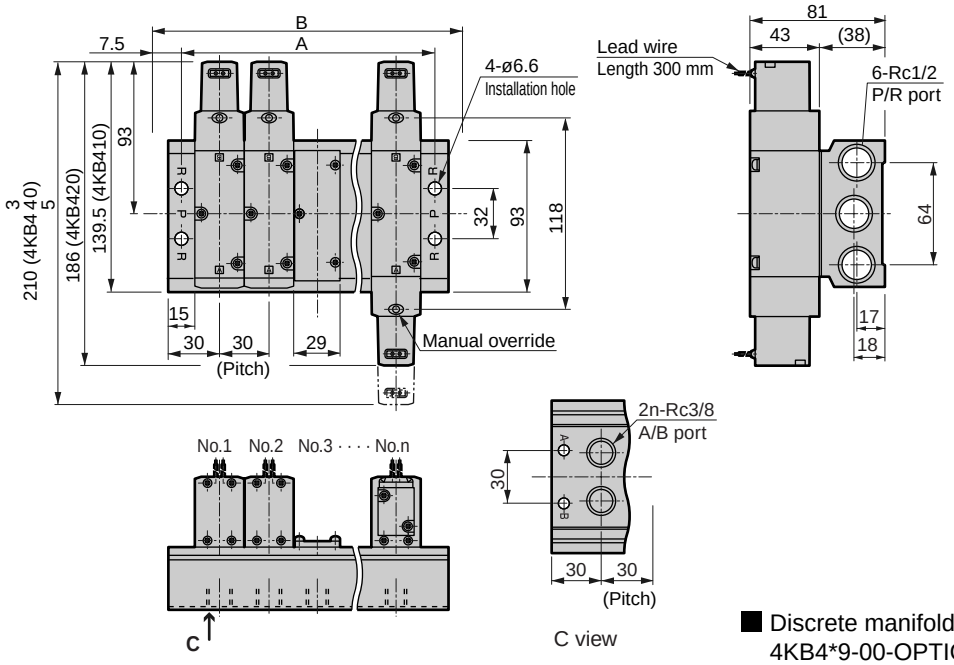

■ Discrete manifold model no.
4KB4*9-00-OPTION-VOLTAGE

Station number	2	3	4	5	6	7	8	9	10	11	12
A	75	105	135	165	195	225	255	285	315	345	375
B	90	120	150	180	210	240	270	300	330	360	390

Dimensions

● Push-in joint ø10, ø12 :
(H10, H12)

● Terminal box:
(B, L, LS)

● C-connector:
(C, C1, C0*, C2, C2*, C3)

● D-connector:
(D, D1, D0*, D2, D2*, D3)

ø10

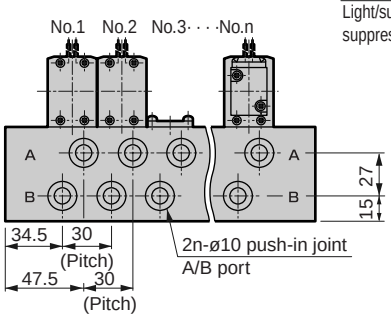

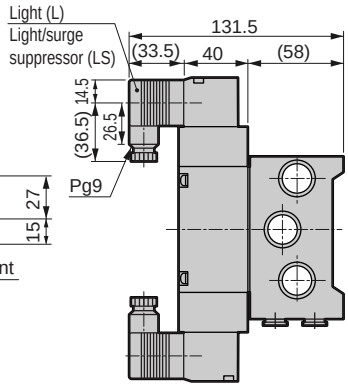

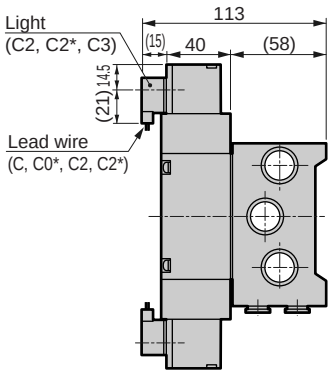

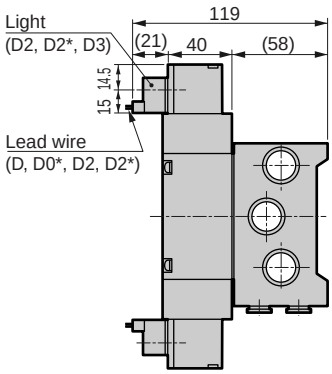

ø12

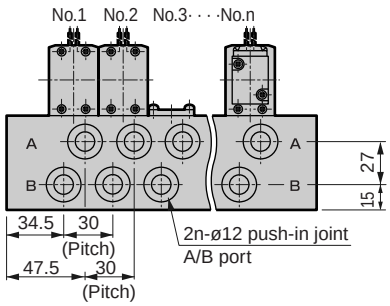

● Port size Rc3/8 (back porting)

● Terminal box:
(B, L, LS)

● C-connector:
(C, C1, C0*, C2, C2*, C3)
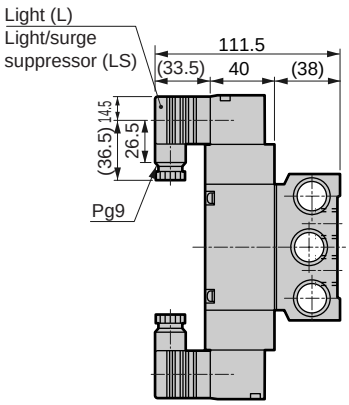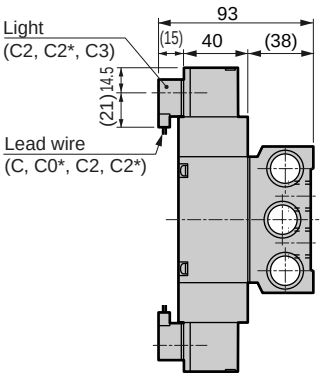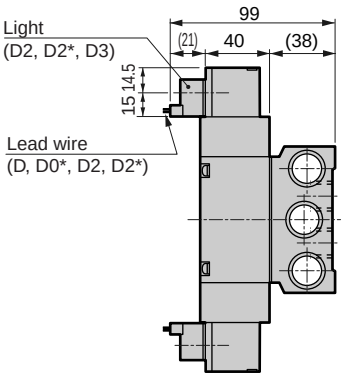
● D-connector:
(D, D1, D0*, D2, D2*, D3)