GÜDEL

GÜDEL

GÜDEL

Guideway systems for heavy duty applications

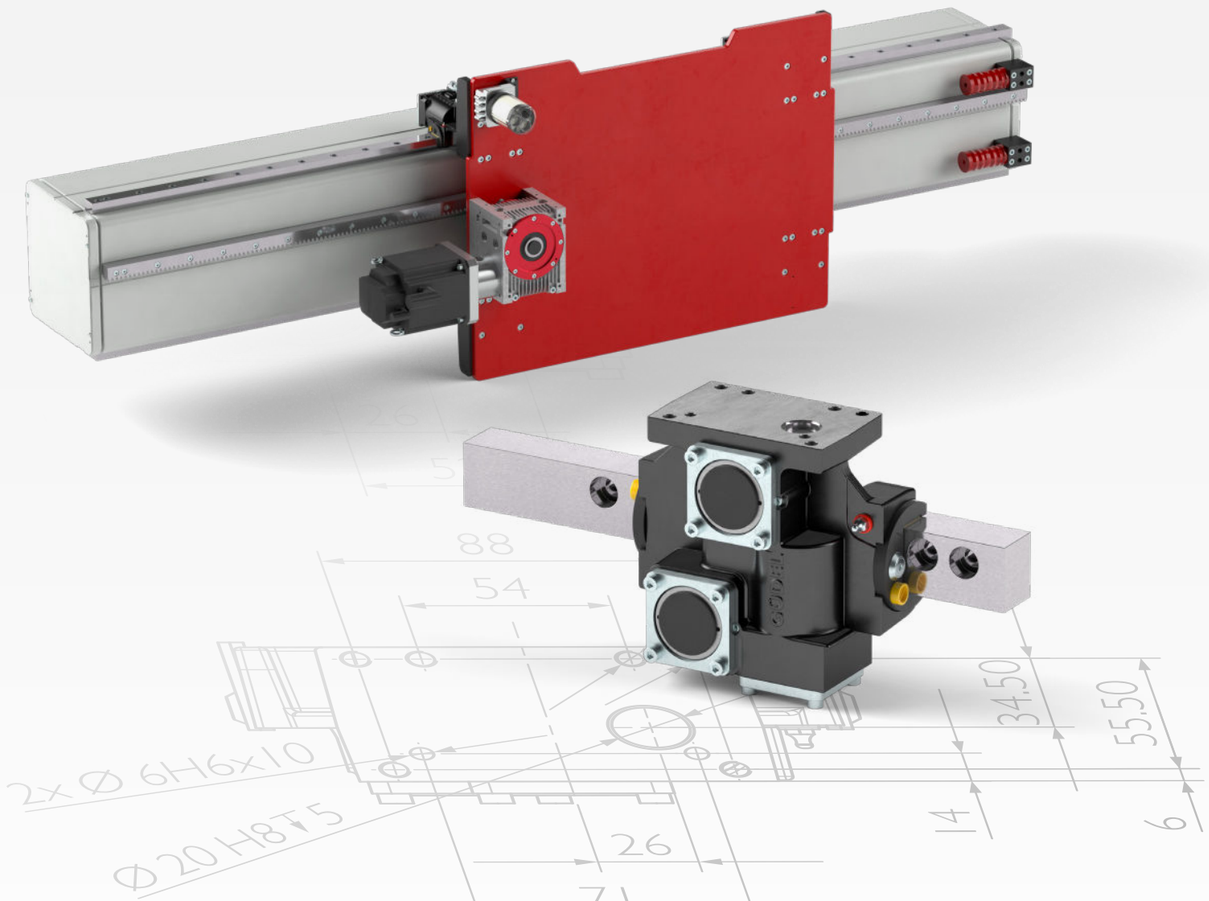

Güdel AG
Gaswerkstrasse 26
4900 Langenthal
Switzerland
Telefon +41 62 916 91 91
info@ch.gudel.com
gudel.com

EN | 02.20 | 10454227

Guideway systems for heavy duty applications

Guideway systems for heavy duty applications

GÜDEL

Content

Guideway systems for heavy duty applications

Product overview Modular system – Tailored guideway systems and drive train solutions 6

Performance data Application-oriented load capacity and service life 8

Function package Your ideal drive train – The perfect addition to your guideway system 10

Technical data sheets

Size 40 14

Size 52 16

Size 72 18

Size 90 20

Your ideal drive train

Planetary gearbox 24

Angle gearbox 26

Installation

Guideway rails 34

Roller support 36

Accessories

Absorbers 40

Clamping element 43

Lubrication

Lubrication The optimal lubrication for smooth processes 46

Technical information

Flowcharts Dimension your roller support 54

Flowcharts Calculation of rack and pinion 56

Güdel worldwide

Contacts 60

Modular system – Tailored guideway systems and drive train solutions

Our guideway systems for heavy duty applications available in four sizes can be combined optimally with our standardized drive train solutions, consisting of rack, pinion, and gearbox. With pre-configured combinations, we provide you with the perfectly matching solution for your requirements.

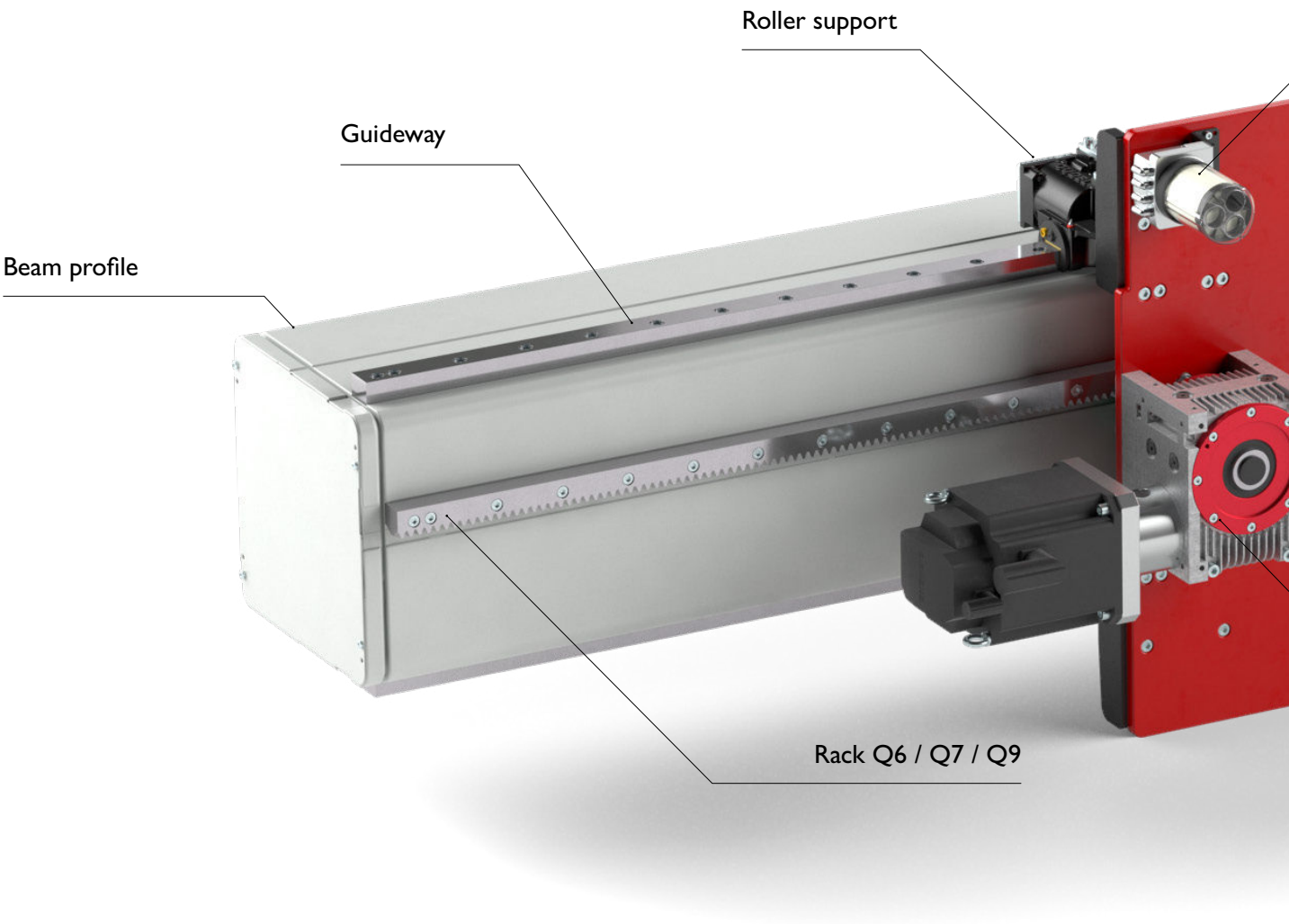

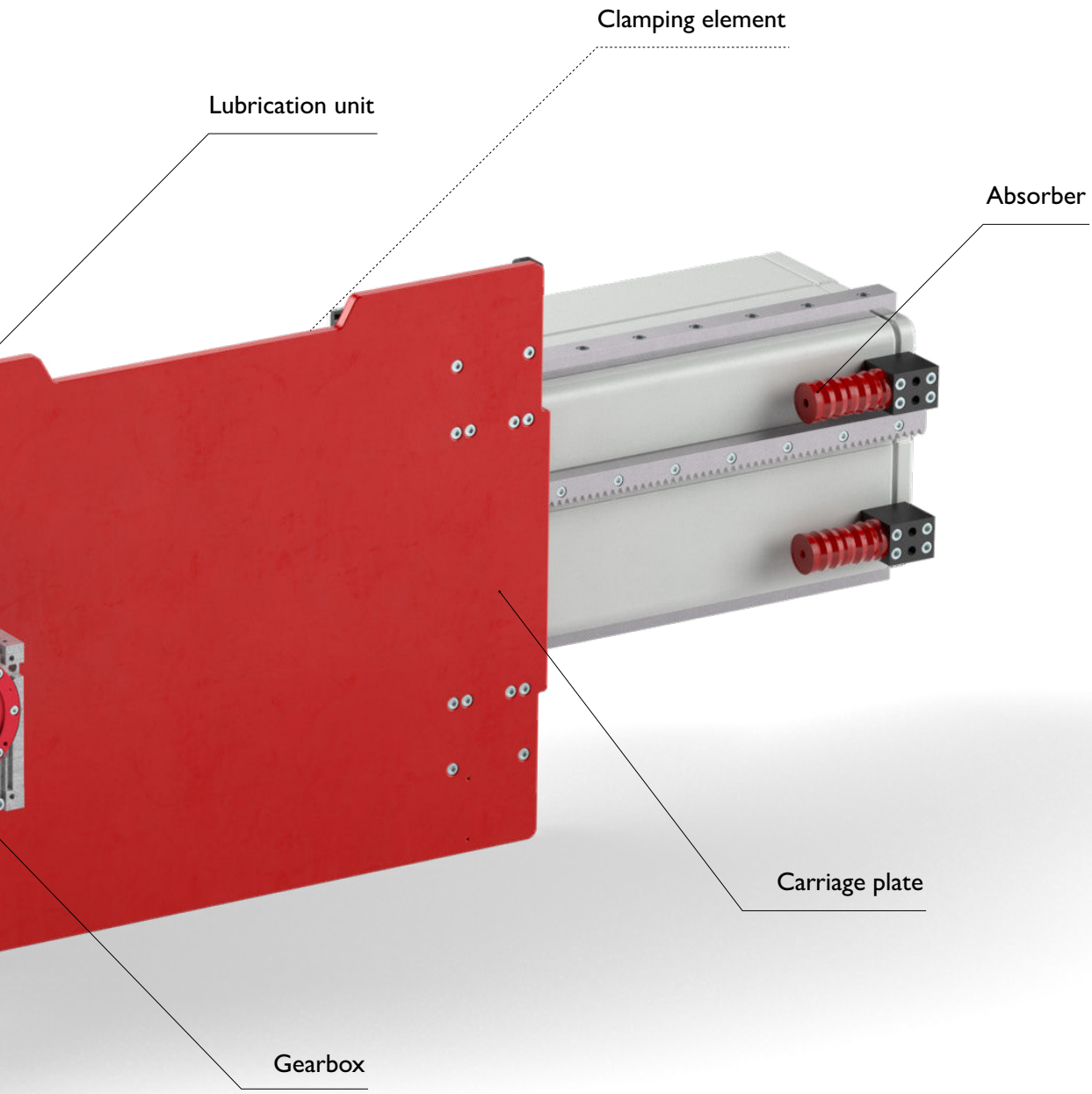
Clamping element
Lubrication unit
Absorber
Carriage plate
Gearbox

Application-oriented load capacity and service life

Our tried-and-tested guideway system for heavy duty applications is divided into four sizes in order to provide the ideal solution for your application. The roller supports are also available in a double roller arrangement in order to achieve a higher payload with the same rails.

We offer the ideal drive train to match the load capacities of the guideway system. Here, the transfer feed forces and the precisions can be coordinated modularly to the application.

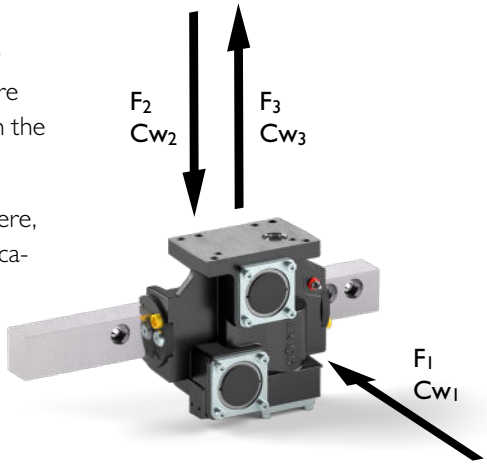

Service life

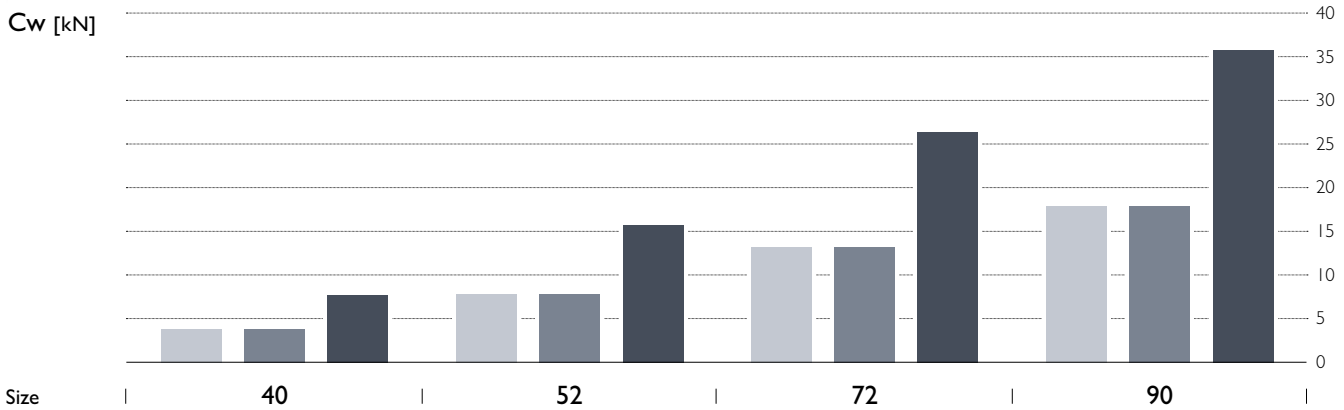

Cw values for nominal service life of 10,000 km

Roller support RB Cw1, Cw2, Cw3 | Roller support DRB Cw1 | Roller support DRB Cw2, Cw3

Load capacity

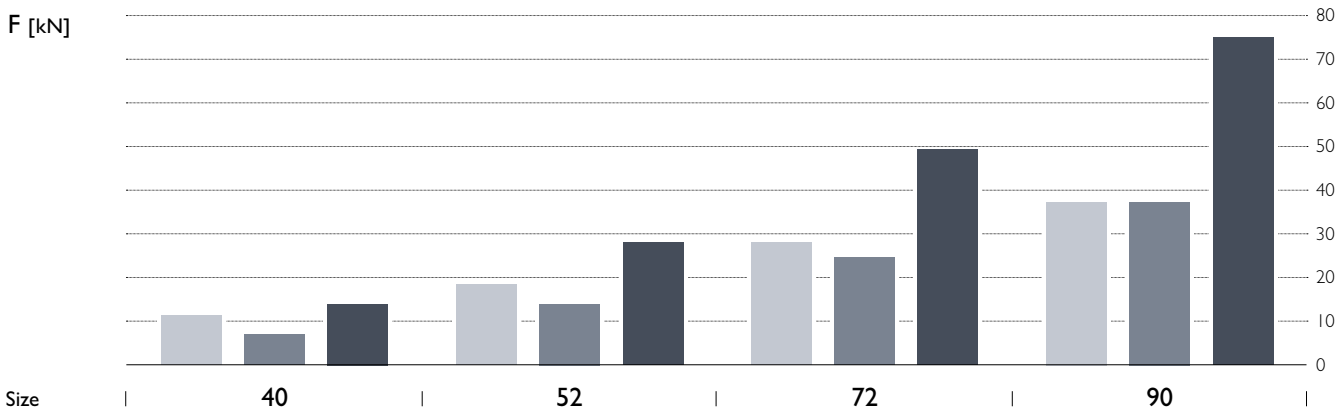

Permissible total force on roller support

Roller support RB F1, F2, F3 | Roller support DRB F1 | Roller support DRB F2, F3

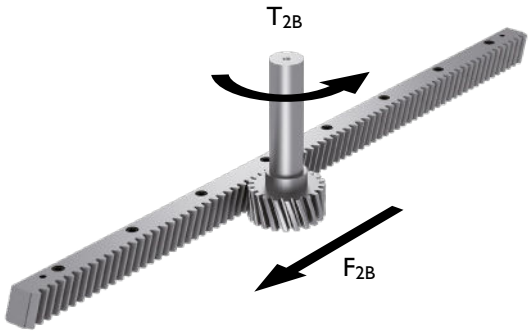

Q6 Q7 Q9

Feed force

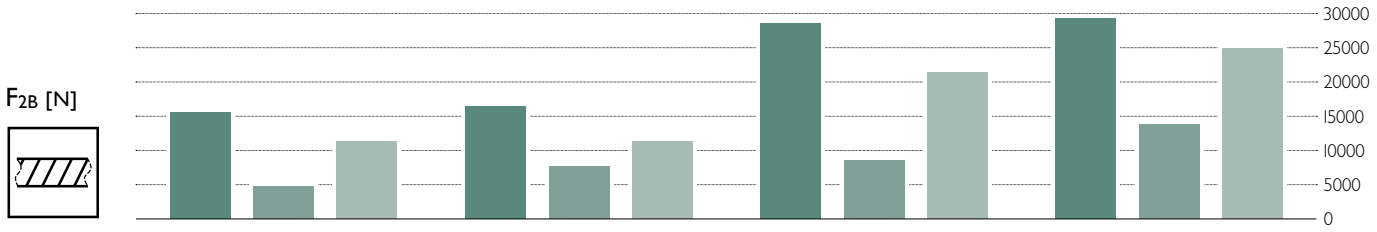

Size	40 & 52		72 & 90		
z	16	20	16	20	Pinion
L2	30	30	40	40	
m_n	3	3	4	4	Modul
p_t	10	10	13.33	13.33	

z: Number of teeth, L_2: Tooth width [mm], m_n: Normal module, p_t: Transverse pitch [mm]

Torque

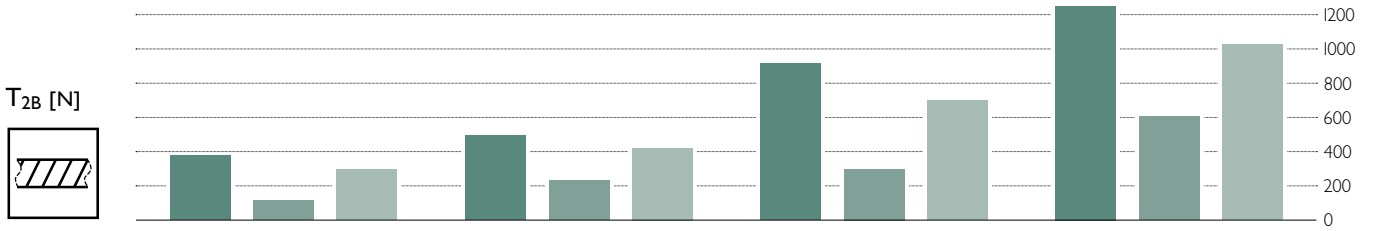

Size	40 & 52		72 & 90		
z	16	20	16	20	Pinion
L2	30	30	40	40	
m_n	3	3	4	4	Modul
p_t	10	10	13.33	13.33	

z: Number of teeth, L_2: Tooth width [mm], m_n: Normal module, p_t: Transverse pitch [mm]

Your ideal drive train – The perfect addition to your guideway system

The ideal configuration of your drive train consists of: Güdel high performance angle gearboxes or high precision planetary gearboxes, racks and pinions.

The Güdel range of products complement each other perfectly and are ideally suited for a high performance drive train. They meet the highest demands of precision and economy. With our compact concepts, highly dynamic drive trains can be built that are universally applicable in terms of installation position.

Our ideal drive train is optimized for applications that require speed, precision, high feed force and dynamics even with long strokes. Fields of application include laser cutting systems, tool and wood processing machines as well as applications in robotics and conveyor technology.

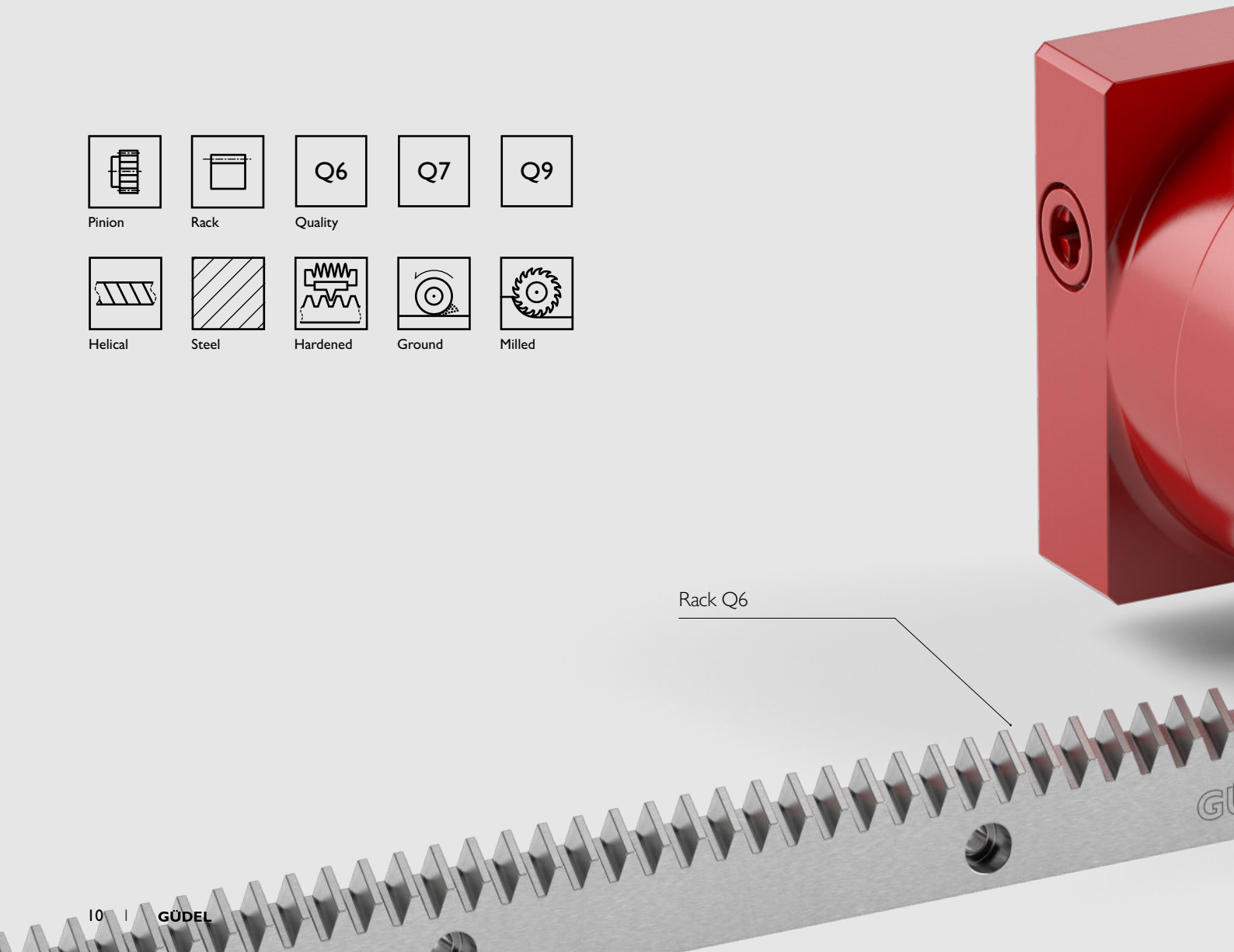

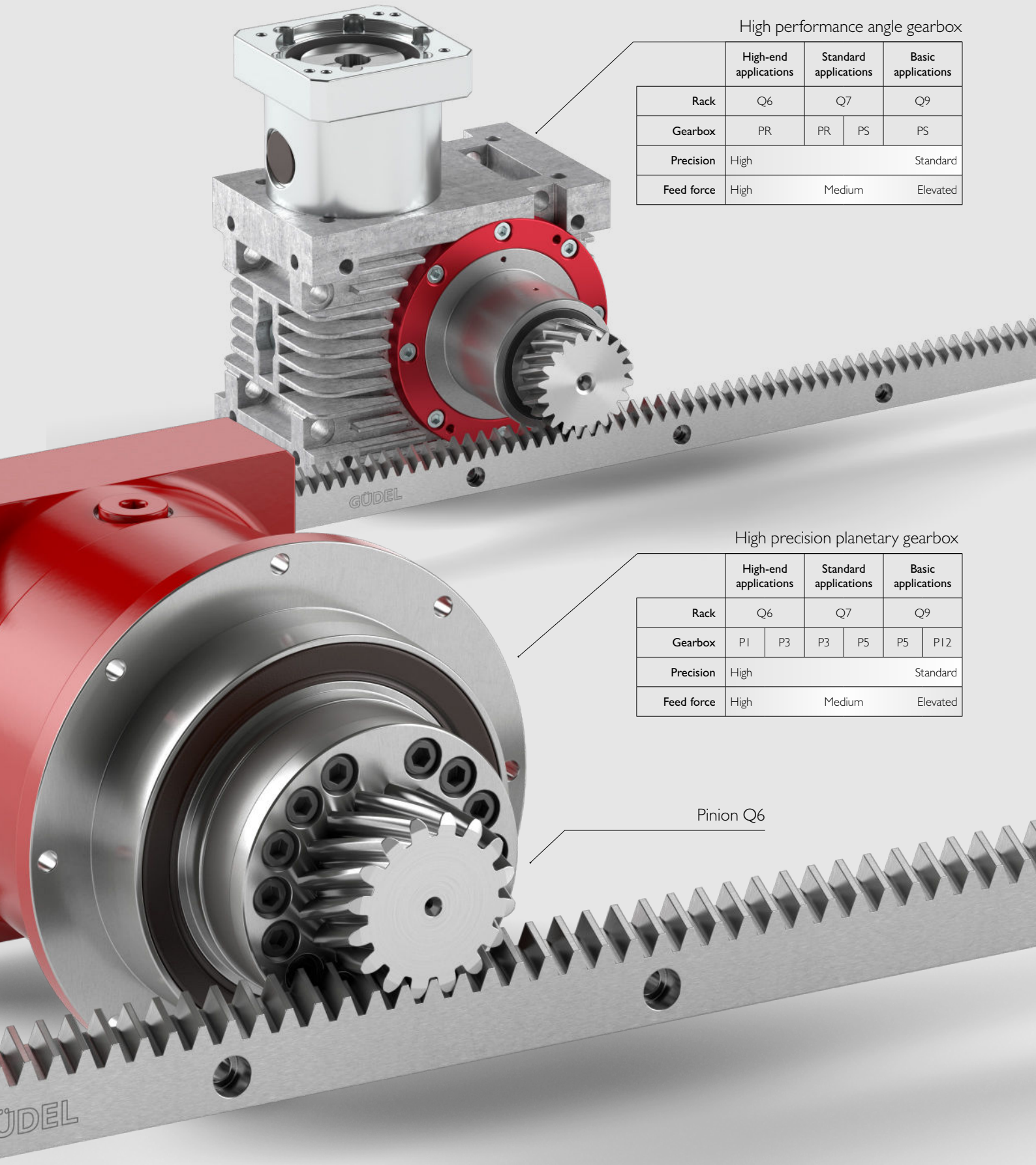

High performance angle gearbox

	High-end applications	Standard applications		Basic applications
Rack	Q6	Q7		Q9
Gearbox	PR	PR	PS	PS
Precision	High			Standard
Feed force	High	Medium		Elevated

High precision planetary gearbox

	High-end applications		Standard applications		Basic applications	
Rack	Q6		Q7		Q9	
Gearbox	P1	P3	P3	P5	P5	P12
Precision	High					Standard
Feed force	High		Medium			Elevated

Pinion Q6

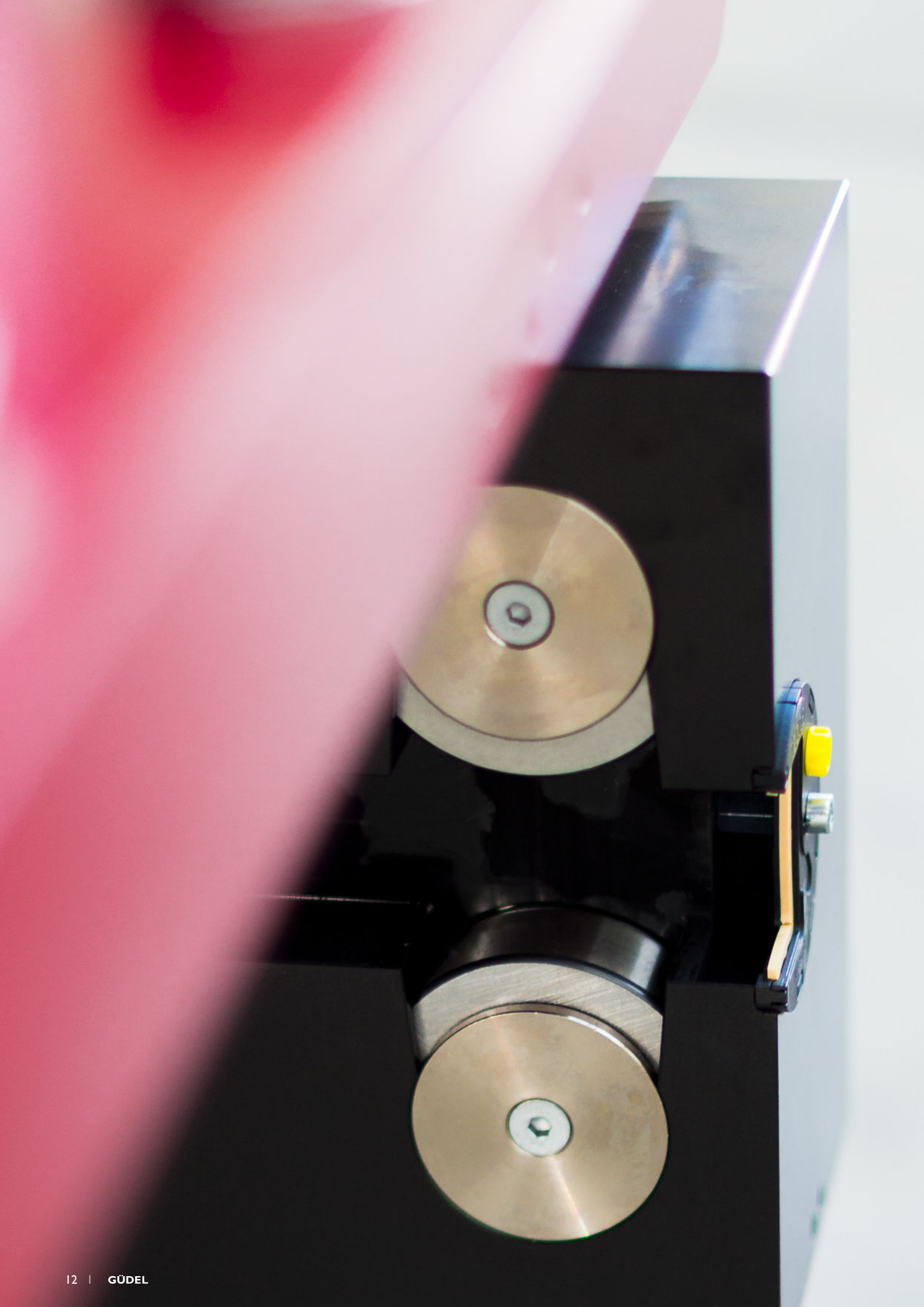

Technical data sheets

GÜDEL

Roller support RB40

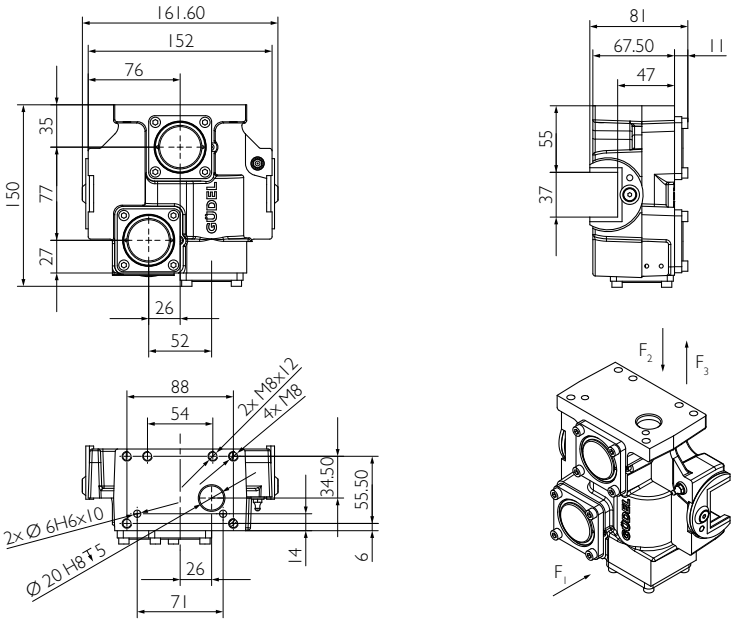

F1
Load on side roller

F2
Load on upper roller

F3
Load on lower roller

Cw
For a nominal service life of 10^7 meter

Type	Casing mat.	Load direction	C_w [N]	n_{max} [min-1]	$F_{max.\ dyn}$ [N]	$F_{max.\ Not}$ [N]	M [kg]	Part no.
RB40-S2937	GJS	F1/F2/F3	3840	5000	11400	17900	5	904200

C_w: Dynamic load rating for 10^7 m, n_{max}: Permissible speed, $F_{max.\ dyn}$: Permissible force on roller support, dynamic, $F_{max.\ Not}$: Permissible force on roller support in emergency stop, M: Weight

Double roller support DRB40

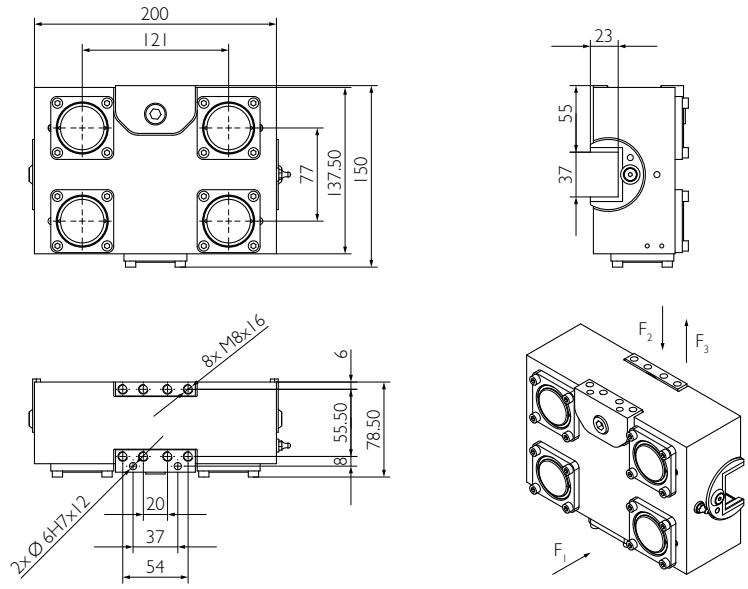

F1
Load on side roller

F2
Load on upper rollers

F3
Load on lower rollers

Cw
For a nominal service life of 10^7 meter

Type	Casing mat.	Load direction	C_w [N]	n_{max} [min-1]	$F_{max.\ dyn}$ [N]	$F_{max.\ Not}$ [N]	M [kg]	Part no.
DRB40-S2937	Aluminum	F1	3840	5000	7000	9600	6.1	904205
		F2/F3	7680		14000	19200		

C_w: Dynamic load rating for 10^7 m, n_{max}: Permissible speed, $F_{max.\ dyn}$: Permissible force on roller support, dynamic, $F_{max.\ Not}$: Permissible force on roller support in emergency stop, M: Weight

Guideway rail

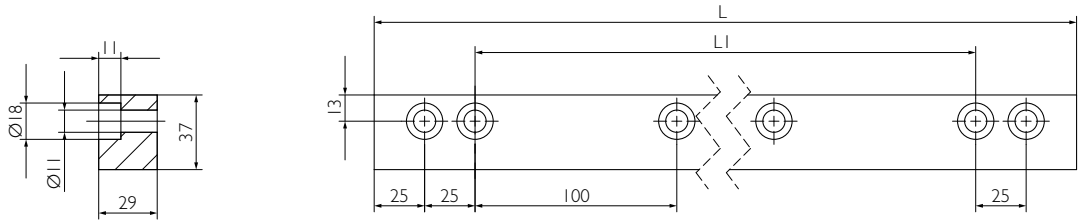

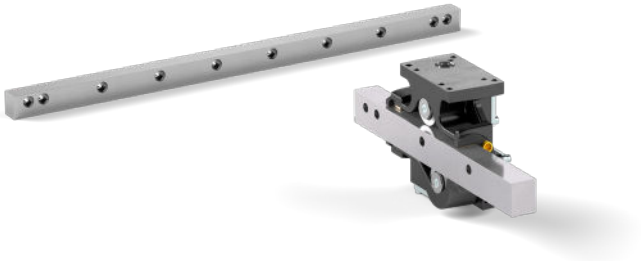

Installation & Accessories

Detailed information on the **package, options & accessories** on page 32f.

Type	Material		L [mm]	L_1 [mm]	M [kg]	Part no.
S2937	58CrMoV4	1.7792	2000	1900	16	903710

M: Weight

Beam profile in steel

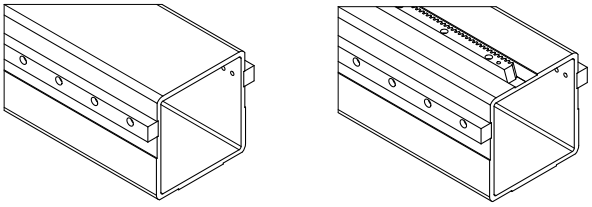

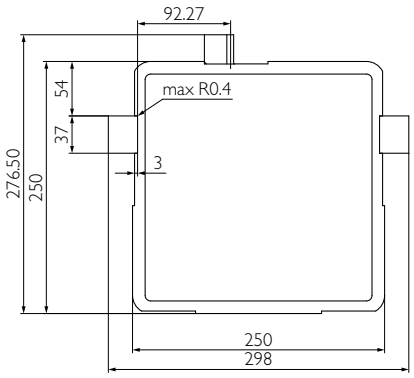

Beam profile in aluminum

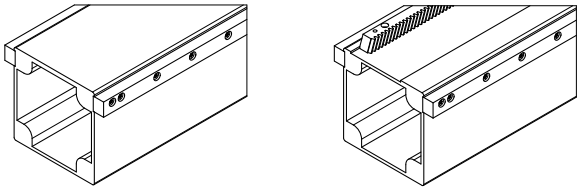

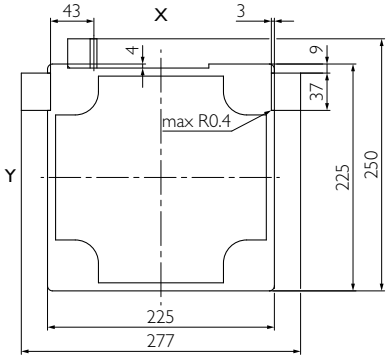

Roller support RB52

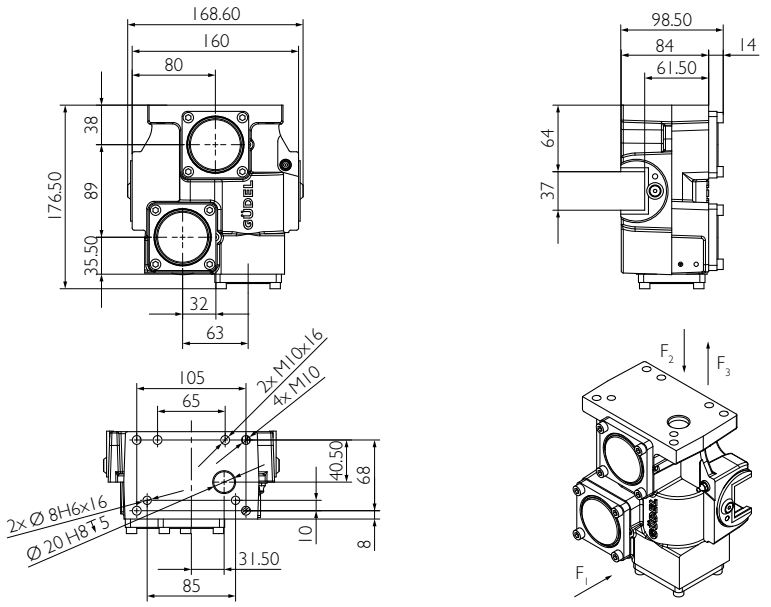

F1
Load on side roller

F2
Load on upper roller

F3
Load on lower roller

Cw
For a nominal service life of 10^7 meter

Type	Casing mat.	Load direction	C_w [N]	n_{max} [min-1]	$F_{max.\ dyn}$ [N]	$F_{max.\ Not}$ [N]	M [kg]	Part no.
RB52-S2937	GJS	F1/F2/F3	7850	3800	18400	31500	8.5	904210

C_w: Dynamic load rating for 10^7 m, n_{max}: Permissible speed, $F_{max.\ dyn}$: Permissible force on roller support, dynamic, $F_{max.\ Not}$: Permissible force on roller support in emergency stop, M: Weight

Double roller support DRB52

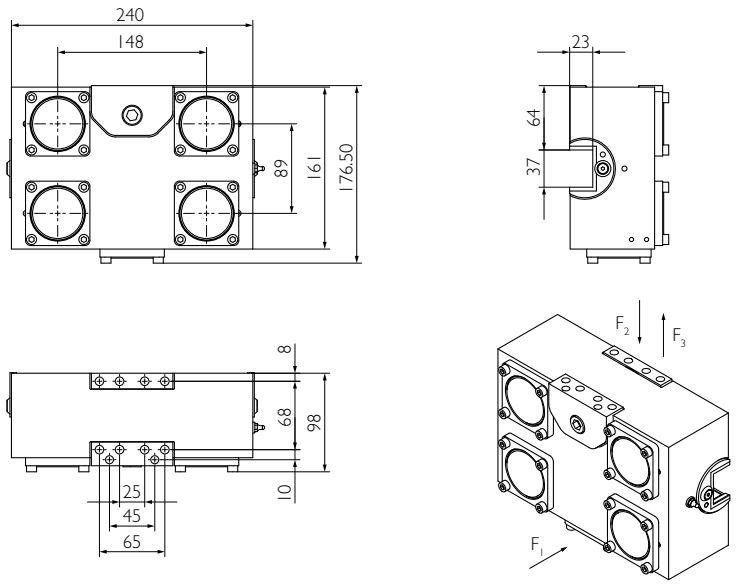

F1
Load on side roller

F2
Load on upper rollers

F3
Load on lower rollers

Cw
For a nominal service life of 10^7 meter

Type	Casing mat.	Load direction	C_w [N]	n_{max} [min-1]	$F_{max.\ dyn}$ [N]	$F_{max.\ Not}$ [N]	M [kg]	Part no.
DRB52-S2937	Aluminum	F1	7850	3800	14000	20000	12	904215
		F2/F3	15700		28000	40000		

C_w: Dynamic load rating for 10^7 m, n_{max}: Permissible speed, $F_{max.\ dyn}$: Permissible force on roller support, dynamic, $F_{max.\ Not}$: Permissible force on roller support in emergency stop, M: Weight

Guideway rail

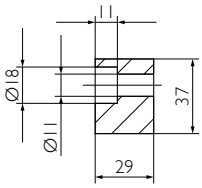

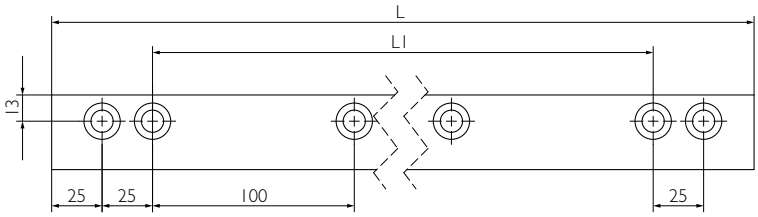

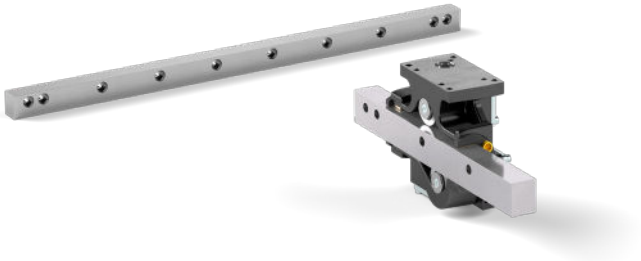

Installation & Accessories

Detailed information on the **package, options & accessories** on page 32f.

Type	Material		L [mm]	L_1 [mm]	M [kg]	Part no.
S2937	58CrMoV4	1.7792	2000	1900	16	903710

M: Weight

Beam profile in steel

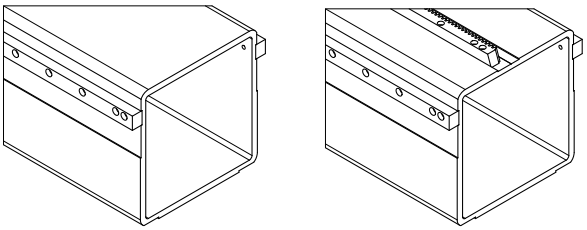

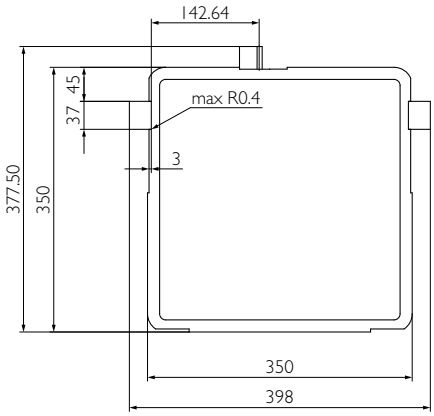

Beam profile in aluminum

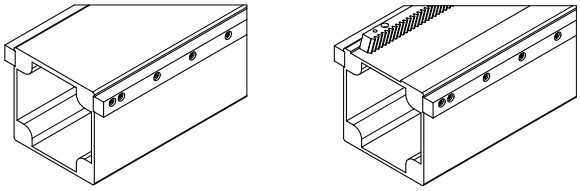

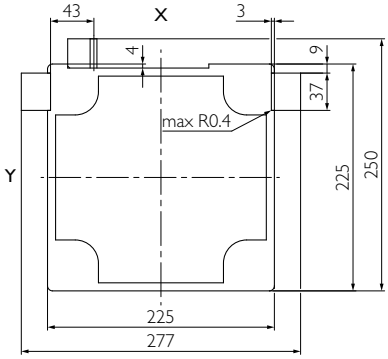

Roller support RB72

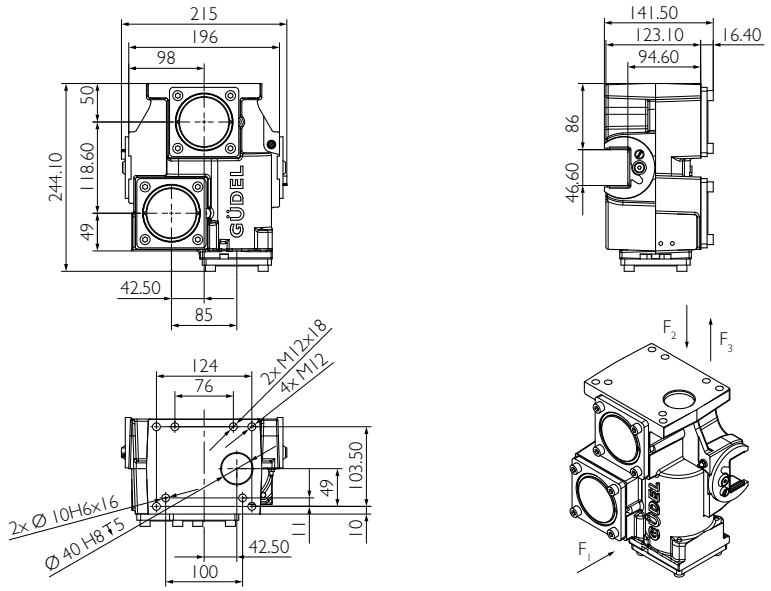

F1
Load on side roller

F2
Load on upper roller

F3
Load on lower roller

Cw
For a nominal service life of 10^7 meters

Type	Casing mat.	Load direction	C_w [N]	n_{max} [min-1]	$F_{max.\ dyn}$ [N]	$F_{max.\ Not}$ [N]	M [kg]	Part no.
RB72-S3547	GJS	F1/F2/F3	13150	2200	28015	56000	20	904230

C_w: Dynamic load rating for 10^7 m, n_{max}: Permissible speed, $F_{max.\ dyn}$: Permissible force on roller support, dynamic, $F_{max.\ Not}$: Permissible force on roller support in emergency stop, M: Weight

Double roller support DRB72

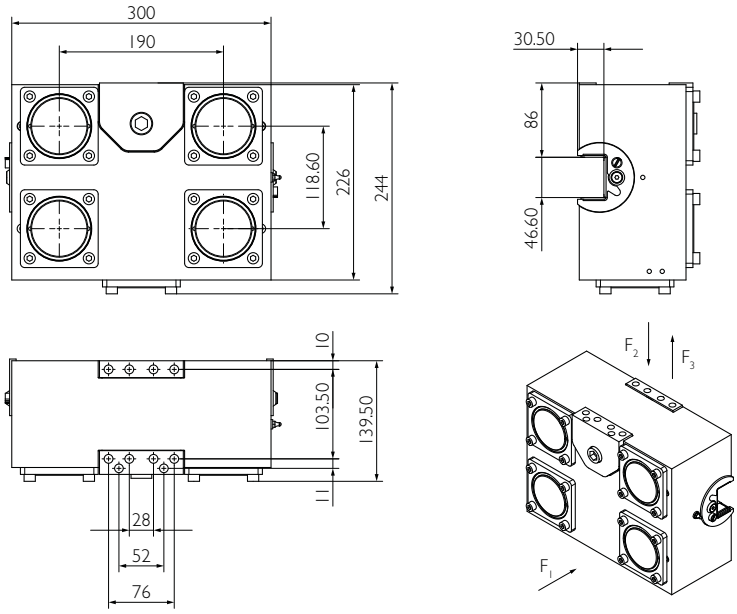

F1
Load on side roller

F2
Load on upper rollers

F3
Load on lower rollers

Cw
For a nominal service life of 10^7 meter

Type	Casing mat.	Load direction	C_w [N]	n_{max} [min-1]	$F_{max.\ dyn}$ [N]	$F_{max.\ Not}$ [N]	M [kg]	Part no.
DRB72-S3547	Aluminum	F1	13150	2200	24600	32600	29	904235
		F2/F3	26300		49200	65200		

C_w: Dynamic load rating for 10^7 m, n_{max}: Permissible speed, $F_{max.\ dyn}$: Permissible force on roller support, dynamic, $F_{max.\ Not}$: Permissible force on roller support in emergency stop, M: Weight

Guideway rail

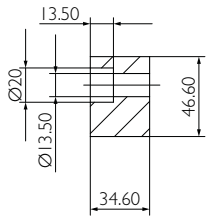

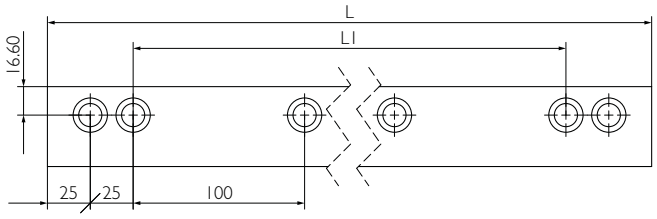

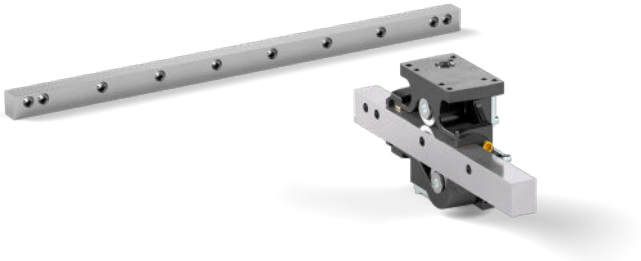

Installation & Accessories

Detailed information on the **package, options & accessories** on page 32f.

Type	Material		L [mm]	L_1 [mm]	M [kg]	Part no.
S3547	58CrMoV4	1.7792	2000	1900	23.9	903700

M: Weight

Beam profile in steel

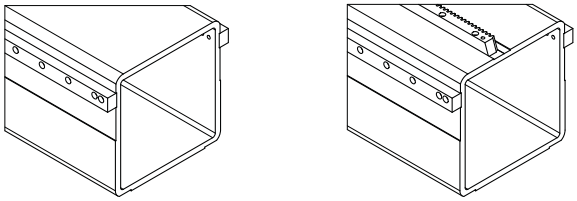

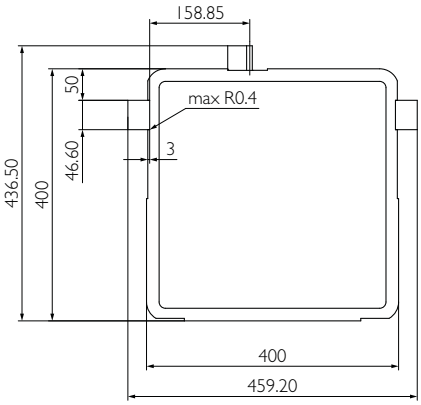

Beam profile in aluminum

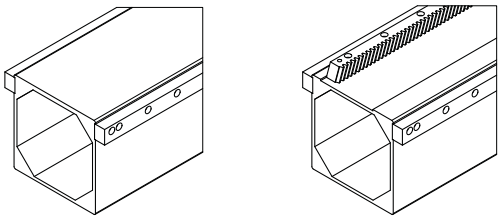

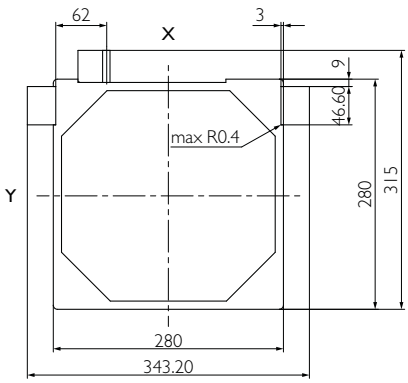

Roller support RB90

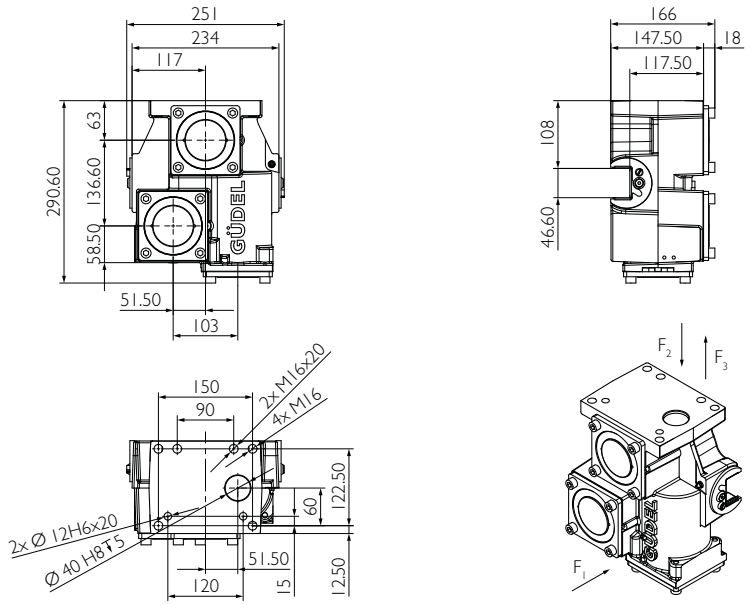

F1
Load on side roller

F2
Load on upper roller

F3
Load on lower roller

Cw
For a nominal service life of 10^7 meters

Type	Casing mat.	Load direction	C_w [N]	n_{max} [min-1]	$F_{max.\ dyn}$ [N]	$F_{max.\ Not}$ [N]	M [kg]	Part no.
RB90-S3547	GJS	F1/F2/F3	17840	1500	37400	65000	36	904240

C_w: Dynamic load rating for 10^7 m, n_{max}: Permissible speed, $F_{max.\ dyn}$: Permissible force on roller support, dynamic, $F_{max.\ Not}$: Permissible force on roller support in emergency stop, M: Weight

Double roller support DRB90

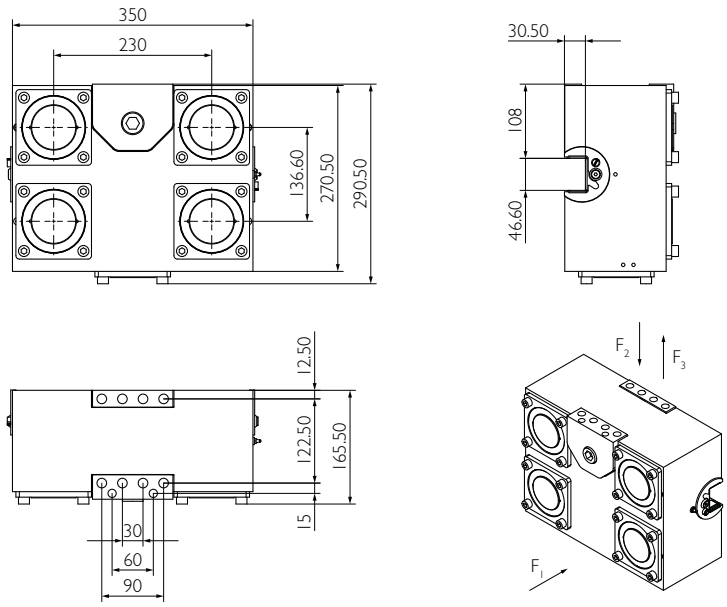

F1
Load on side roller

F2
Load on upper rollers

F3
Load on lower rollers

Cw
For a nominal service life of 10^7 meter

Type	Casing mat.	Load direction	C_w [N]	n_{max} [min-1]	$F_{max.\ dyn}$ [N]	$F_{max.\ Not}$ [N]	M [kg]	Part no.
DRB90-S3547	Aluminum	F1	17840	1500	37400	57400	53	904245
		F2/F3	35680		74800	114800		

C_w: Dynamic load rating for 10^7 m, n_{max}: Permissible speed, $F_{max.\ dyn}$: Permissible force on roller support, dynamic, $F_{max.\ Not}$: Permissible force on roller support in emergency stop, M: Weight

Guideway rail

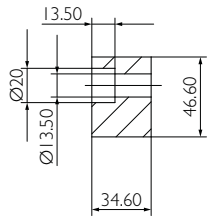

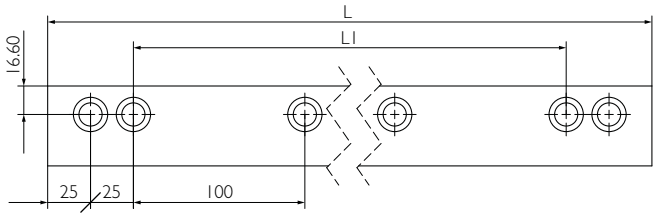

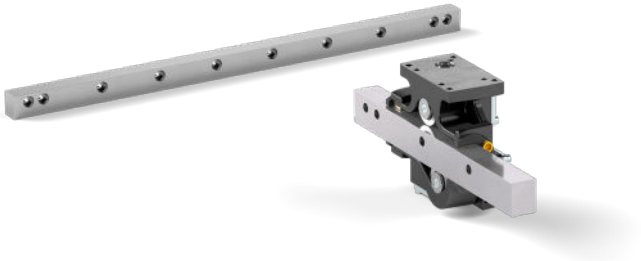

Installation & Accessories

Detailed information on the **package, options & accessories** on page 32f.

Type	Material		L [mm]	L_1 [mm]	M [kg]	Part no.
S3547	58CrMoV4	1.7792	2000	1900	23.9	903700

M: Weight

Beam profile in steel

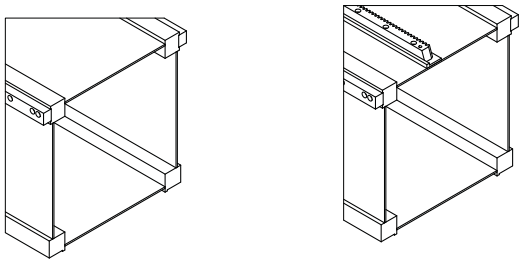

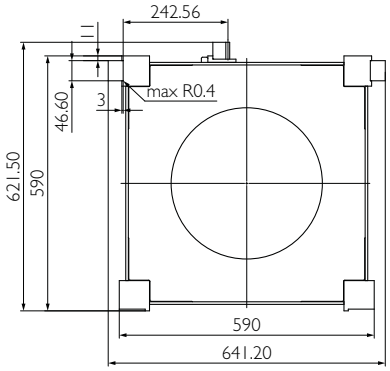

Beam profile in aluminum

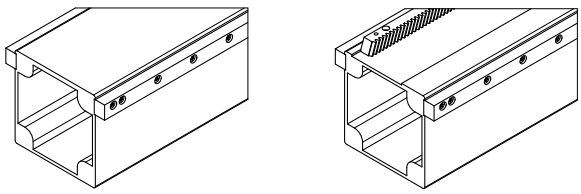

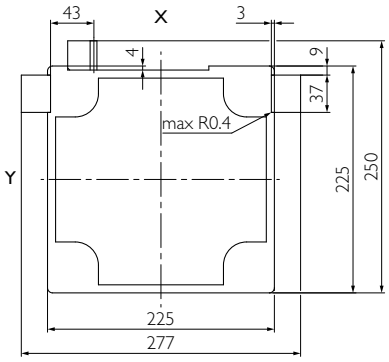

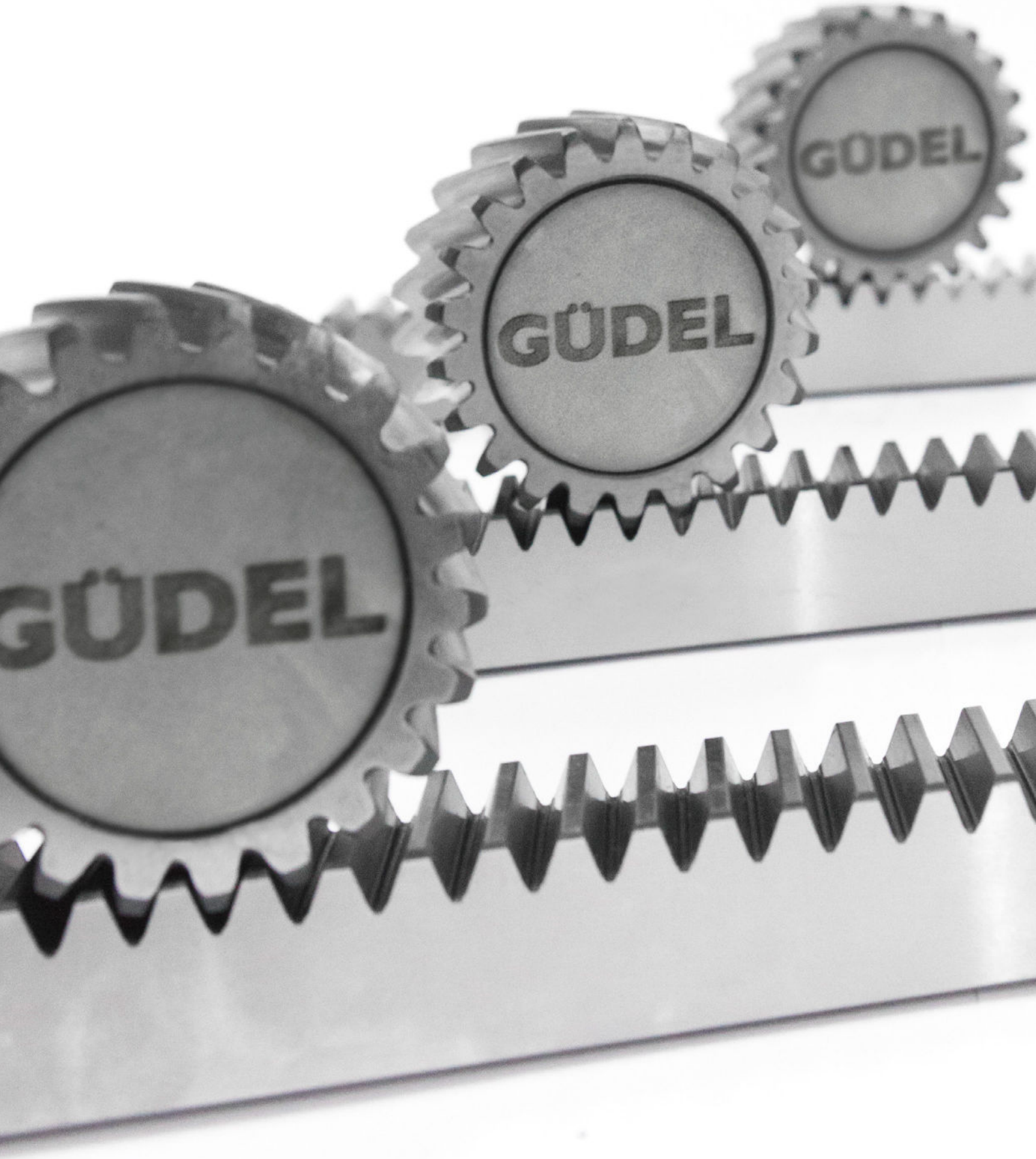
GÜDEL
GÜDEL
GÜDEL

Your ideal drive train

GÜDEL

Racks & pinions range

Find the suitable gearbox
in our catalog for
high precision planetary gearboxes.

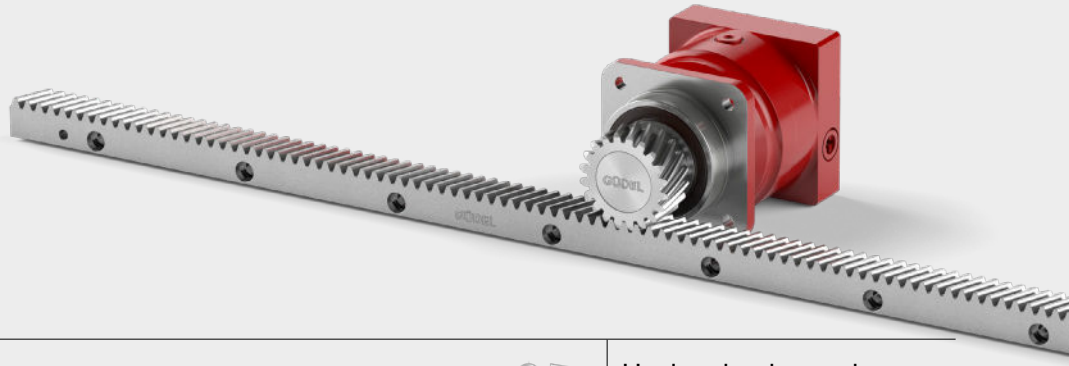

Pinion

Helical teeth, modular pitch

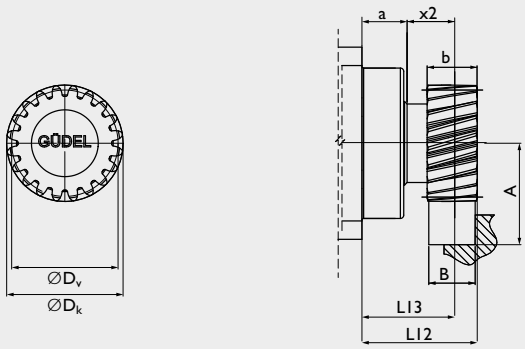

Hardened and ground

Material
16MnCr5 DIN 1.7131

Teeth
pressure angle α = 20°
helix angle ß = 19° 31'42''
hardened (58^{+4}_{0} HRC)
ground, crowned

Quality
6f24 DIN 3962/63/67

Geometrical data

	Gearbox	m_n	P_t	z	A	b	D_k	D_0	D_v	L12	L13	x2	a	M
BG 40	NRH 100	3	10.00	20	57.831	30	69.66	63.662	63.662	69.0	54.0	27.0	27	0.7
BG 52	NRH 140	3	10.00	22	61.014	30	76.03	70.028	70.028	69.5	54.5	27.5	27	0.8
BG 72	NR 180	4	13.33	20	77.441	40	92.88	84.883	84.883	83.5	63.5	31.5	32	1.5
BG 90	NR 180	4	13.33	20	77.441	40	92.88	84.883	84.883	83.5	63.5	31.5	32	1.5

m_n: Normal module, P_t: Transverse pitch [mm], z: Number of teeth, D_0: Pitch circle diameter for calculation, D_v: Pitch circle diameter for construction, M: Weight [kg]

Rack

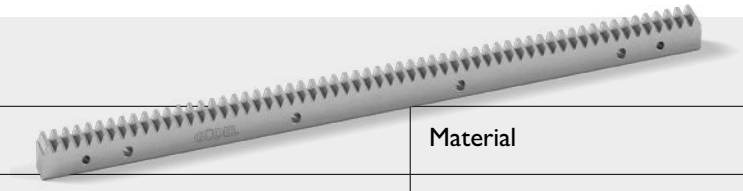

F_p

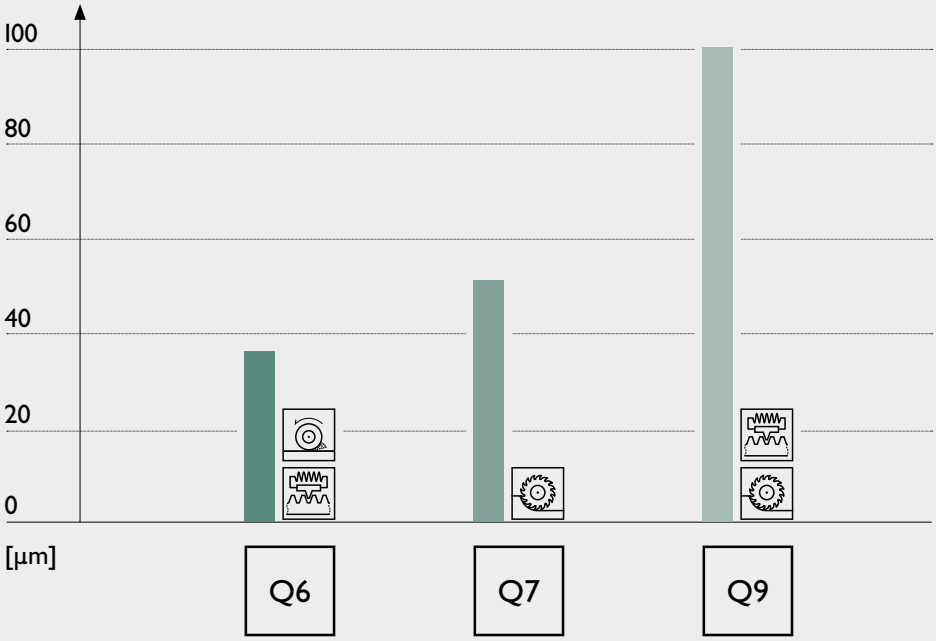

Example of the cumulative pitch deviation F_p for module 4 based on length 1000mm. Quality DIN 3962.

Material

Steel

Processing

Hardened

Milled

Ground

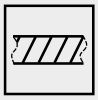

Helical

Geometrical data

Size	m_n	P_t	L	z	b	h
40 52	3	10.00	500.00	50	29	29
			1000.00	100		
			2000.00	200		
72 90	4	13.33	506.67	38	39	39
			1000.00	75		
			2000.00	150		

m_n: Normal module, P_t: Transverse pitch [mm], z: Number of teeth
* Double amount of fixing holes for maximum feed force

Q6	Q6+*	Q7	Q9
Part no.	Part no.	Part no.	Part no.
246042	246142	155042	158042
246043	246143	155043	158043
246044	246144	155044	158044
246055	246152	155052	158052
246056	246153	155053	158053
246057	246154	155054	158054

Page 28 Page 29 Page 30 Page 31

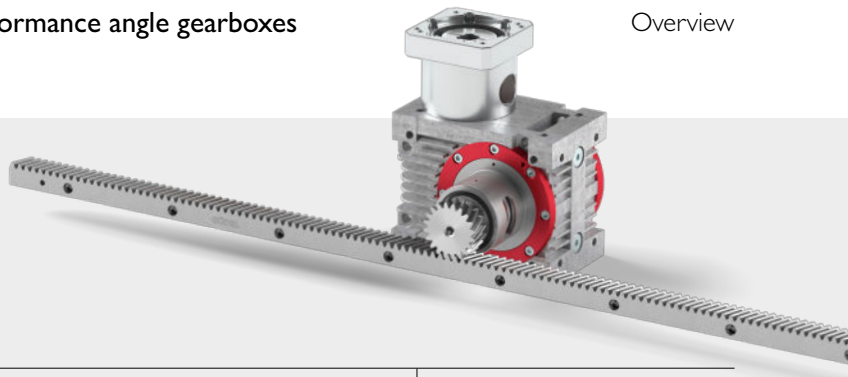

Racks & pinions range

Find your matching gearbox in our catalog for high performance angle gearboxes.

Output & pinion

Helical teeth, modular pitch

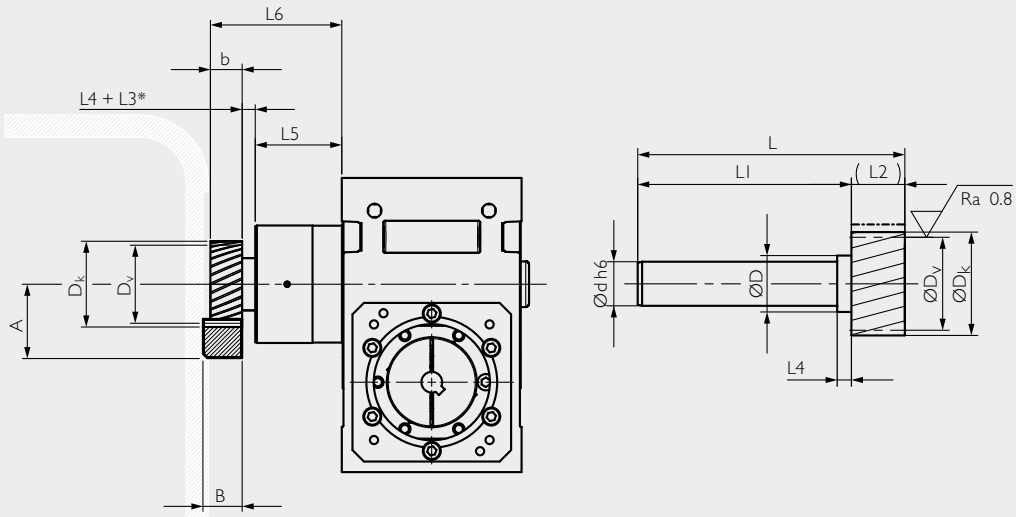

Hardened and ground

Material
16MnCr5 DIN 1.7131
shaft/bore soft

Teeth
pressure angle α = 20°
helical teeth system left
helix angle ß = 19° 31'42''
hardened (58^{+4}_{0} HRC)
ground, crowned

Quality
6f24 DIN 3962/63/67

Geometrical data

AY	HPG	m_n	P_t	A	Output L5	Output L6	Output L3	Pinion z	d	D_k	D_0	D_v	D	L	D1	(L2) b	L4	Y	M	Part no.
40 52	060	3	10.00	52.365	53.0	91.0	0	16	25	58.73	50.930	52.730	32	150	120	30	8.0	218	0.99	211416
					58.0	96.0	0													
					83.0	121.0	0													
					53.0	99.0	8													
					83.0	136.0	15							180	150			227	1.10	0201358
	090	3	10.00	57.830	63.0	105.5	0	20	40	69.66	63.662	63.662	50	190	160		12.5	726	2.38	211420
					104.5	147.0	0													
72	090	4	13.33	70.153	104.5	184.5	22	16	40	78.31	67.906	70.306	50	230	190	40	18.0	1172	3.17	0201214
				77.440	63.0	121.0	0	20		92.88	84.883	84.883		200	160			1954	3.43	211520
					104.5	162.5	0													
90	120	4	13.33	77.440	123	177.5	0	20	60	92.88	84.883	84.883	74	310	270	40	14.5	4459	7.89	211521
						211.5	34													

m_n: Normal module, P_t: Transverse pitch [mm], z: Number of teeth, D_0: Pitch circle diameter for calculation, D_v: Pitch circle diameter for construction, J: Moment of inertia [10^{-6} kg m^2], M: Weight [kg]

Rack

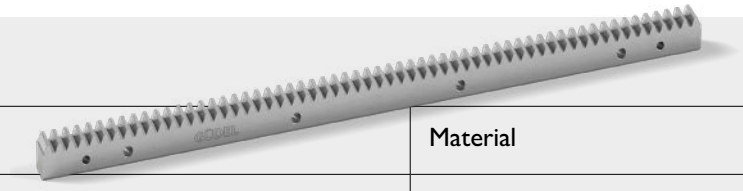

F_p

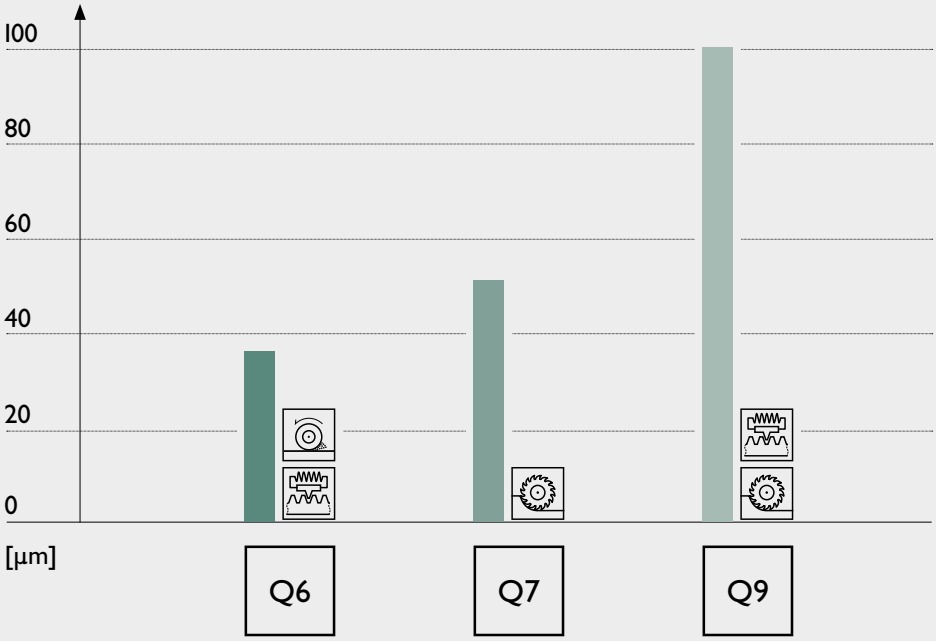

Example of the cumulative pitch deviation F_p for module 4 based on length 1000mm. Quality DIN 3962.

Material

Steel

Processing

Hardened

Milled

Ground

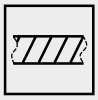

Helical

Geometrical data

Size	m_n	P_t	L	z	b	h
40 52	3	10.00	500.00	50	29	29
			1000.00	100		
			2000.00	200		
72 90	4	13.33	506.67	38	39	39
			1000.00	75		
			2000.00	150		

m_n: Normal module, P_t: Transverse pitch [mm], z: Number of teeth
* Double amount of fixing holes for maximum feed force

Q6	Q6+*	Q7	Q9
Part no.	Part no.	Part no.	Part no.
246042	246142	155042	158042
246043	246143	155043	158043
246044	246144	155044	158044
246055	246152	155052	158052
246056	246153	155053	158053
246057	246154	155054	158054

Page 28 Page 29 Page 30 Page 31

Helical teeth, modular pitch

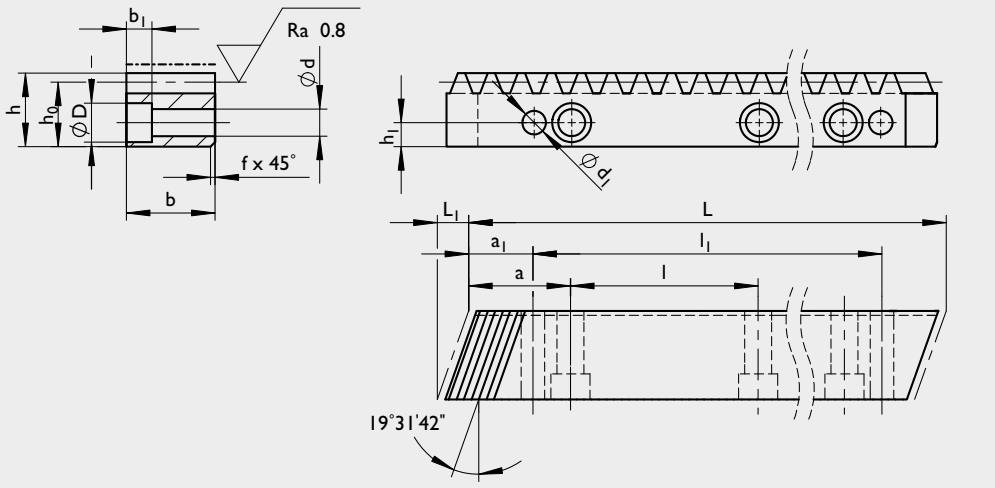

–·–· hardened

Hardened and ground

Material
C45E DIN 1.1191

Profile
all faces ground

Teeth
pressure angle α = 20°
helix angle ß =19° 31'42''
hardened (54^{+4}_{0} HRC)
and ground

Quality
6h23 DIN 3962/63/67

p_f [mm]
cut-to-length tolerance for
continuos mounting -0.05/-0.50

F_{pL} [mm]
cumulative pitch deviation
based on length L

Geometrical data

Size	m_n	p_t	L	L_1	z	b	h	h_0	f+0.5	a	l	h_1	d	D	b_1	a_1	l_1	d_1	F_{pL}	M	Part no.
40 52	3	10.00	500.00	10.3	50	29	29	26.0	2	62.5	125	9	10	15	9	35.0	430.0	7.7	0.028	2.8	246042
			1000.00		100												930.0		0.037	5.6	246043
			2000.00		200												1930.0		0.054	11.2	246044
72 90	4	13.33	506.67	13.8	38	39	39	35.0	2	62.5	125	12	12	18	11	33.3	433.0	9.7	0.030	5.1	246055
			1000.00		75												933.4		0.036	10.1	246056
			2000.00		150												1933.4		0.050	20.2	246057

m_n: Normal module, P_t: Transverse pitch [mm], z: Number of teeth, d_1: Predrilled, M: Weight [kg]

Helical teeth, modular pitch

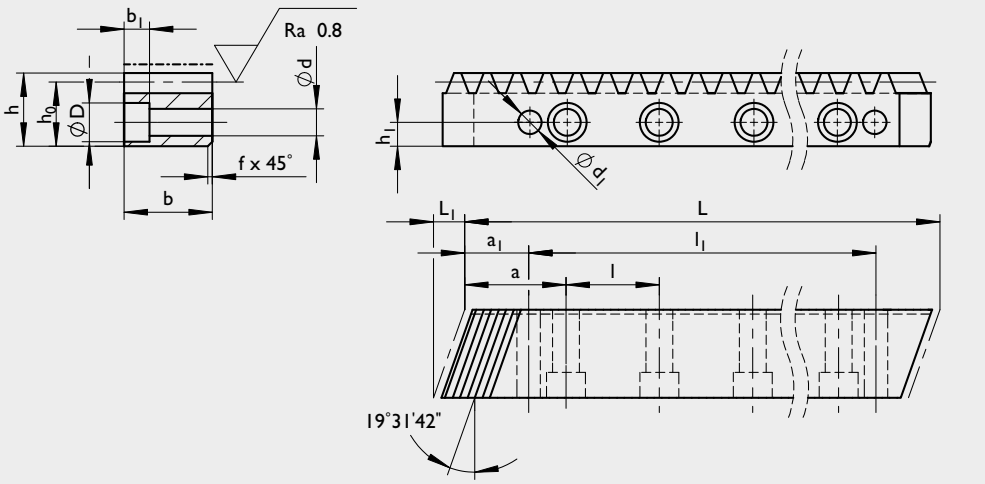

–·–· hardened

Hardened and ground

Material
C45E DIN 1.1191

Profile
all faces ground

Teeth
pressure angle α = 20°
helical teeth system right
helix angle ß = 19° 31'42''
hardened (58^{+4}_{0} HRC)
and ground

Quality
6h23 DIN 3962/63/67

p_f [mm]
cut-to-length tolerance for
continuous mounting -0.05/-0.50

F_{pL} [mm]
cumulative pitch deviation
based on length L

Geometrical data

Size	m_n	p_t	L	L_1	z	b	h	h_0	f+0.5	a	l	h_1	d	D	b_1	a_1	l_1	d_1	F_{pL}	M	Part no.
40 52	3	10.00	500.00	10.3	50	29	29	26.0	2	62.5	62.5	9	10	15	9	35.0	430.0	7.7	0.028	2.7	246142
			1000.00		100												930.0		0.037	5.4	246143
			2000.00		200												1930.0		0.054	10.8	246144
72 90	4	13.33	506.67	13.8	38	39	39	35.0	2	62.5	62.5	12	12	18	11	33.3	433.0	9.7	0.030	4.9	246152
			1000.00		75												933.4		0.036	9.7	246153
			2000.00		150												1933.4		0.050	19.5	246154

m_n: Normal module, P_t: Transverse pitch [mm], z: Number of teeth, d_1: Predrilled, M: Weight [kg]

Helical teeth, modular pitch

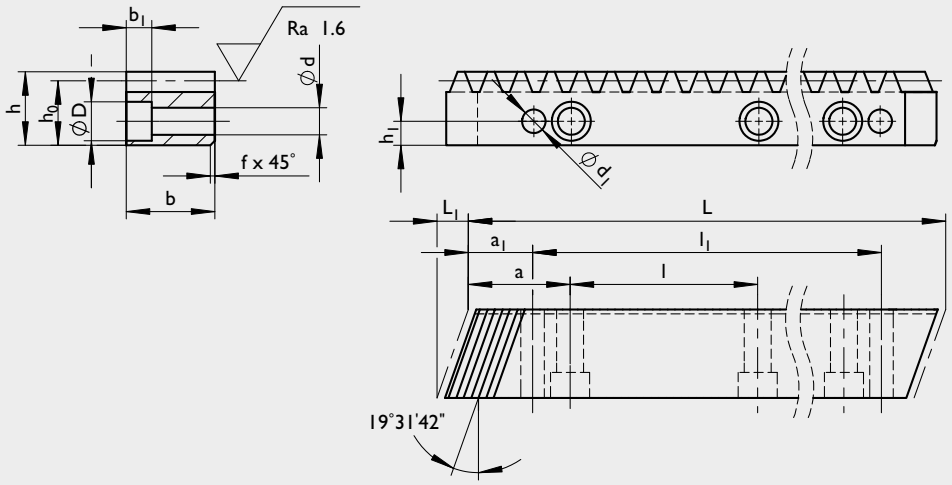

Milled

Material
42CrMo4 DIN 1.72251

Profile
all faces milled

Teeth
pressure angle α = 20°
helical teeth system right
helix angle ß = 19° 31'42''
milled

Quality
7h25 DIN 3962/63/67

p_f [mm]
cut-to-length tolerance for
continuous mounting -0.05/-0.50

F_{pL} [mm]
cumulative pitch deviation
based on length L

Geometrical data

Size	m_n	p_t	L	L_1	z	b	h	h_0	f+0.5	a	l	h_1	d	D	b_1	a_1	l_1	d_1	F_{pL}	M	Part no.
40 52	3	10.00	500.00	10.3	50	29	29	26.0	1	62.5	125	9	10	15	9	35.0	430.0	7.7	0.040	2.8	155042
			1000.00		100												930.0		0.051	5.6	155043
			2000.00		200												1930.0		0.073	11.2	155044
72 90	4	13.33	506.67	13.8	38	39	39	35.0	1	62.5	125	12	12	18	11	33.3	433.0	9.7	0.042	5.1	155052
			1000.00		75												933.4		0.051	10.1	155053
			2000.00		150												1933.4		0.070	20.2	155054

m_n: Normal module, P_t: Transverse pitch [mm], z: Number of teeth, d_1: Predrilled, M: Weight [kg]

Helical teeth, modular pitch

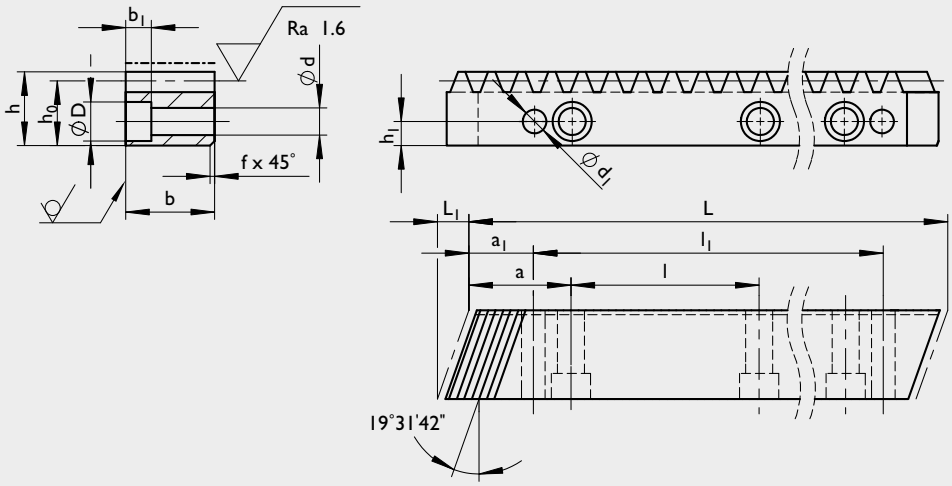

–·–· hardened

Milled and hardened

Material
C45E DIN 1.1191

Profile
all faces milled

Teeth
pressure angle α = 20°
helical teeth system right
helix angle ß = 19° 31'42''
hardened (58^{+4}_{0} HRC)
milled

Quality
9h27 DIN 3962/63/67

p_f [mm]
cut-to-length tolerance for
continuous mounting -0.05/-0.50

F_{pL} [mm]
cumulative pitch deviation
based on length L

Geometrical data

Size	m_n	p_t	L	L_1	z	b	h	h_0	f+0.5	a	l	h_1	d	D	b_1	a_1	l_1	d_1	F_{pL}	M	Part no.
40 52	3	10.00	500.00	10.3	50	29	29	26.0	2	62.5	125	9	10	15	9	35.0	430.0	7.7	0.080	2.8	158042
			1000.00		100												930.0		0.103	5.6	158043
			2000.00		200												1930.0		0.147	11.2	158044
72 90	4	13.33	506.67	13.8	38	39	39	35.0	2	62.5	125	12	12	18	11	33.3	433.0	9.7	0.083	5.1	158052
			1000.00		75												933.4		0.101	10.1	158053
			2000.00		150												1933.4		0.136	20.2	158054

m_n: Normal module, P_t: Transverse pitch [mm], z: Number of teeth, d_1: Predrilled, M: Weight [kg]

GÜDEL

Installation

GÜDEL

The basis of your guideway system

A correctly dimensioned basic structure is required to ensure correct mounting and support of the guide rails. The Güdel steel or aluminum beam profiles are ideally suited for this purpose. Alternatively you can use your own support structure.

Güdel specialists will be happy to support you in the configuration.

Machining & tolerances

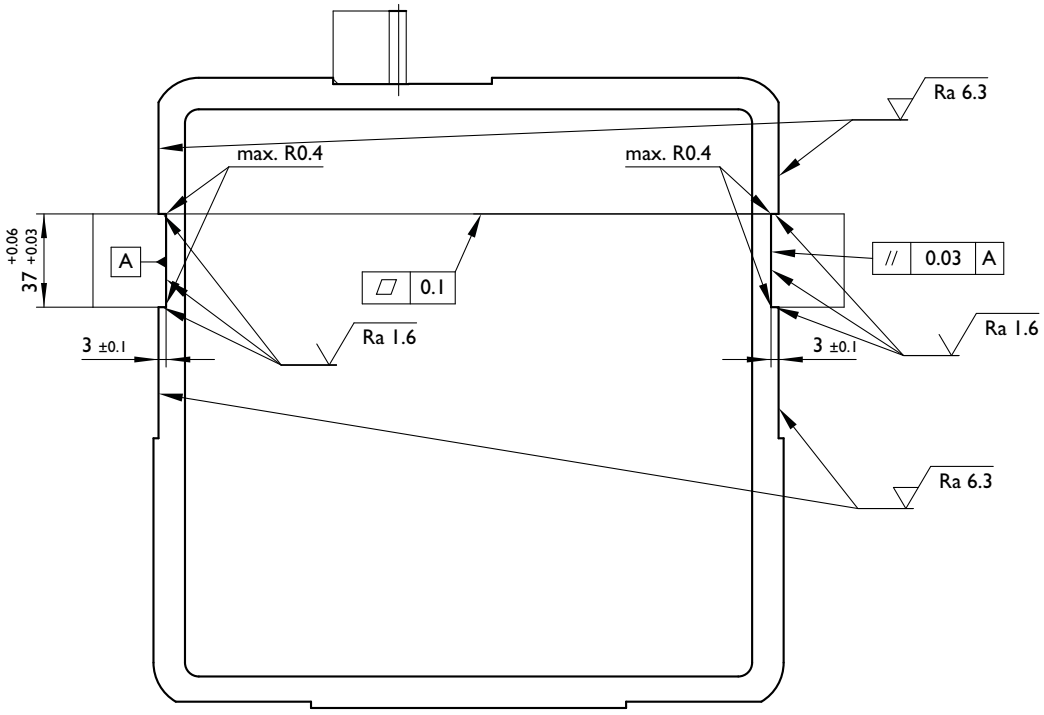

Fastening with thread-rolling screw

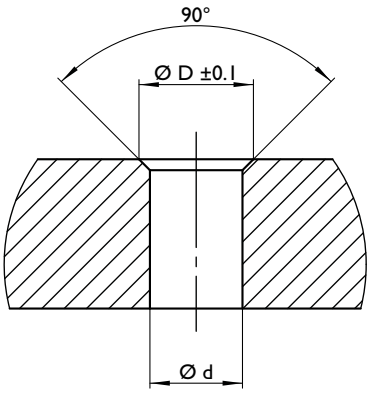

Geometrical data

Guideway rail	Screw	Part No.	Torque in S355	Torque in aluminium	Drill hole d	Countersink D
S2937	M10x45	0174938	63 [Nm]	71 [Nm]	Ø 9.3 H13	Ø11.5
S3547	M12x40	0174939	108 [Nm]	123 [Nm]	Ø 11.2 H13	Ø13.5

Use Güdel thread-rolling screws for efficient screwed connections to fasten the guide rails.
The screw forms a metric thread when it is screwed in.
This saves the need for time-consuming thread cutting in the beam profile.

Mounting with socket-head cap screw

Guideway rail	Screw in S355	Screw in aluminium	Quality
S2937	M10x30	M10x40	8.8
S3547	M12x40	M12x50	8.8

Guide rails are mounted with socket-head cap screws, ISO 4762, quality 8.8.
The minimum thread length in steel is 1x nominal screw diameter.
The minimum thread length in aluminum is 2x nominal screw diameter.

Roller bracket installation - Attention: Installation is only possible in combination with **limit stop edge A** or **sleeve B**

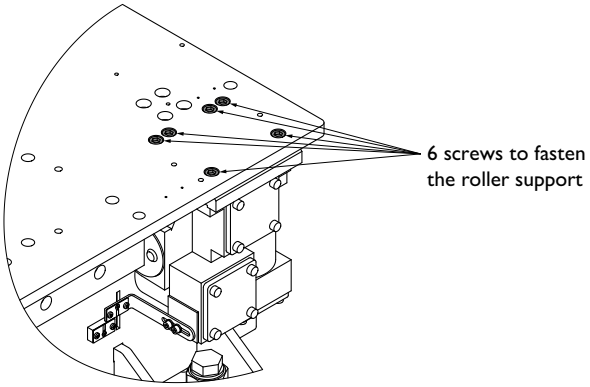

Geometrical data

Roller support part No.	Size	Pieces	Screws	Ma (Nm)
8625-001	RB40	6x	M8x25	24.6
8625-002	RB52	6x	M10x25	48
8625-003	RB72	6x	M12x40	84
8625-010	RB90	6x	M16x50	206

The roller bracket is fastened with 6 screws.

Stop edge A

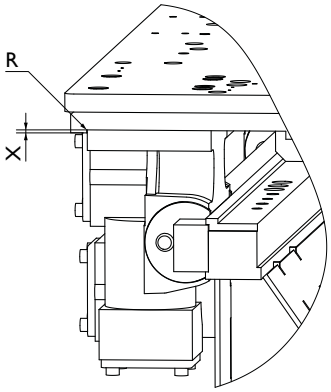

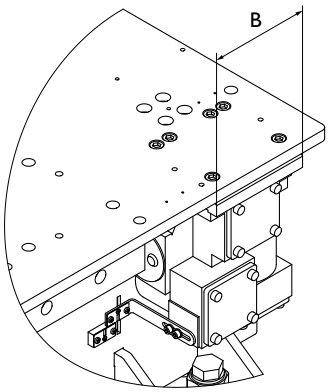

Geometrical data

Roller support part No.	Size	Measurement X	B min	R
8625-001	RB40	2mm	110mm	Sharp-edged
8625-002	RB52	8mm	130mm	Sharp-edged
8625-003	RB72	8mm	160mm	Sharp-edged
8625-010	RB90	8mm	220mm	Sharp-edged

The forces acting on the lateral roller must be absorbed by means of a limit stop edge A.

Sleeve B

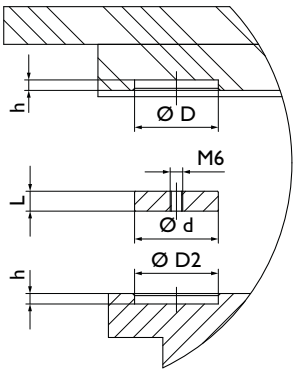

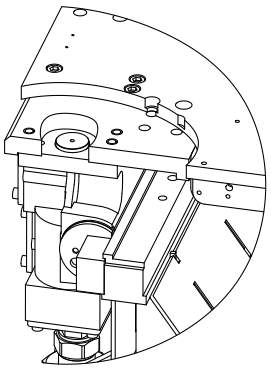

Geometrical data

Roller support part No.	Size	Sleeve Part No.	Ø D	h	Ø d	L	Ø D²	Sleeve drill hole
8625-001	RB40	10401121	20H8	5	20h8	9.5	20H8	M6
8625-002	RB52	10401121	20H8	5	20h8	9.5	20H8	M6
8625-003	RB72	10401122	40H8	5	40h8	9.5	40H8	M6
8625-010	RB90	10401122	40H8	5	40h8	9.5	40H8	M6

Alternatively, the lateral forces can be absorbed by sleeve B.

Accessories

GÜDEL

Absorber P30

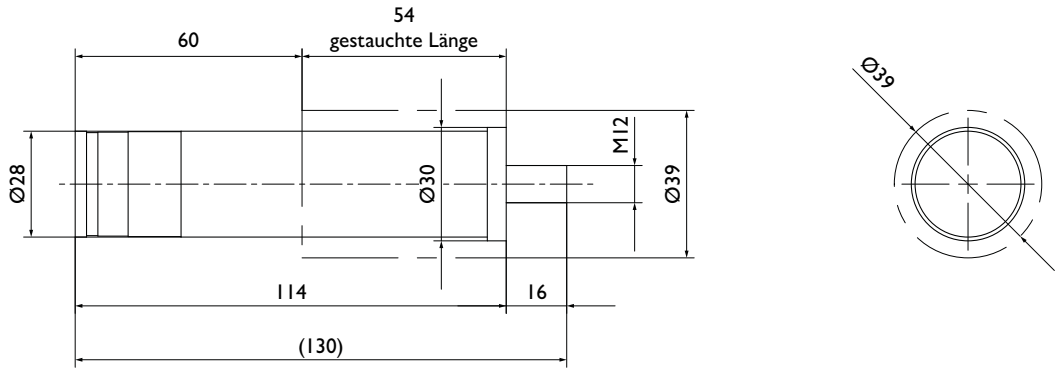

Geometrical data

Type	Max. compression length	Deformation diameter	Max. permitted energy/work [Nm]	Max. reaction force [N]	M [kg]	Part No.
P30	60	39	1300	27000	0.1	10138132

Moving load P30

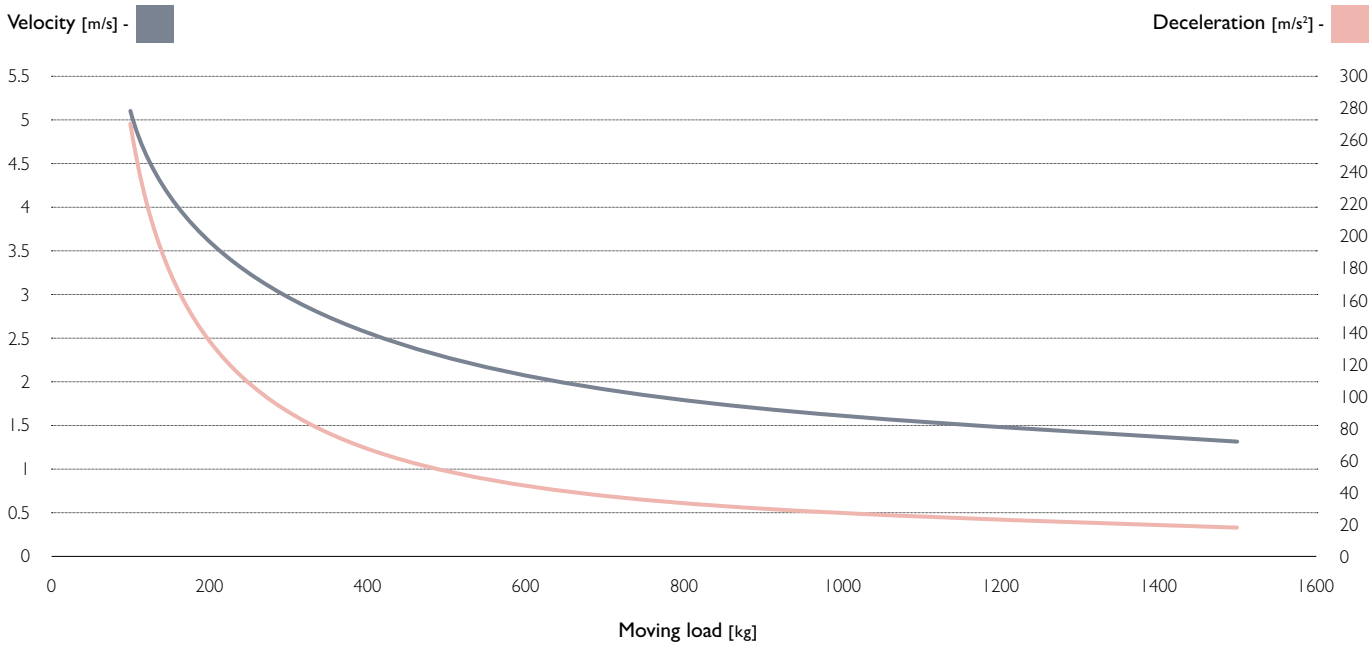

Area below the **velocity** curve is permissible.
The **deceleration** curve shows the deceleration occurring with a corresponding moving load.

Absorber P474

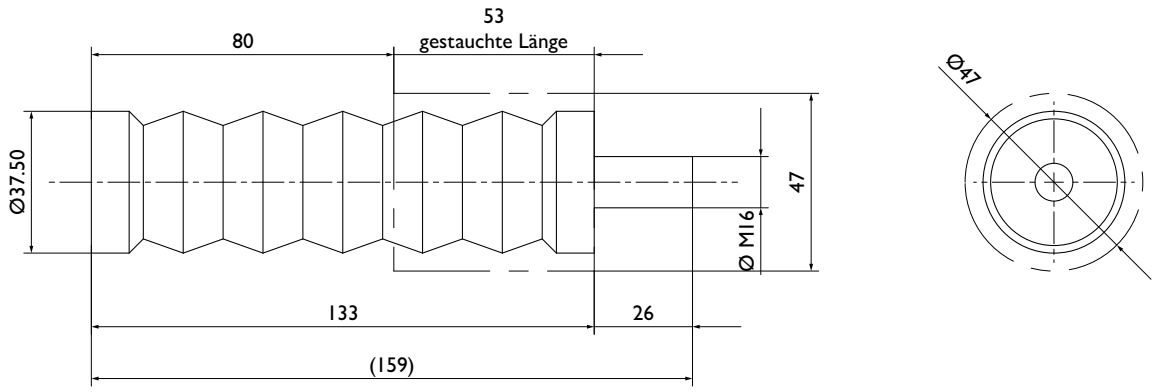

Geometrical data

Type	Max. compression length	Deformation diameter	Max. permitted energy/work [Nm]	Max. reaction force [N]	M [kg]	Part No.
P474	80	47	4000	60000	0.3	10414217

Moving load P474

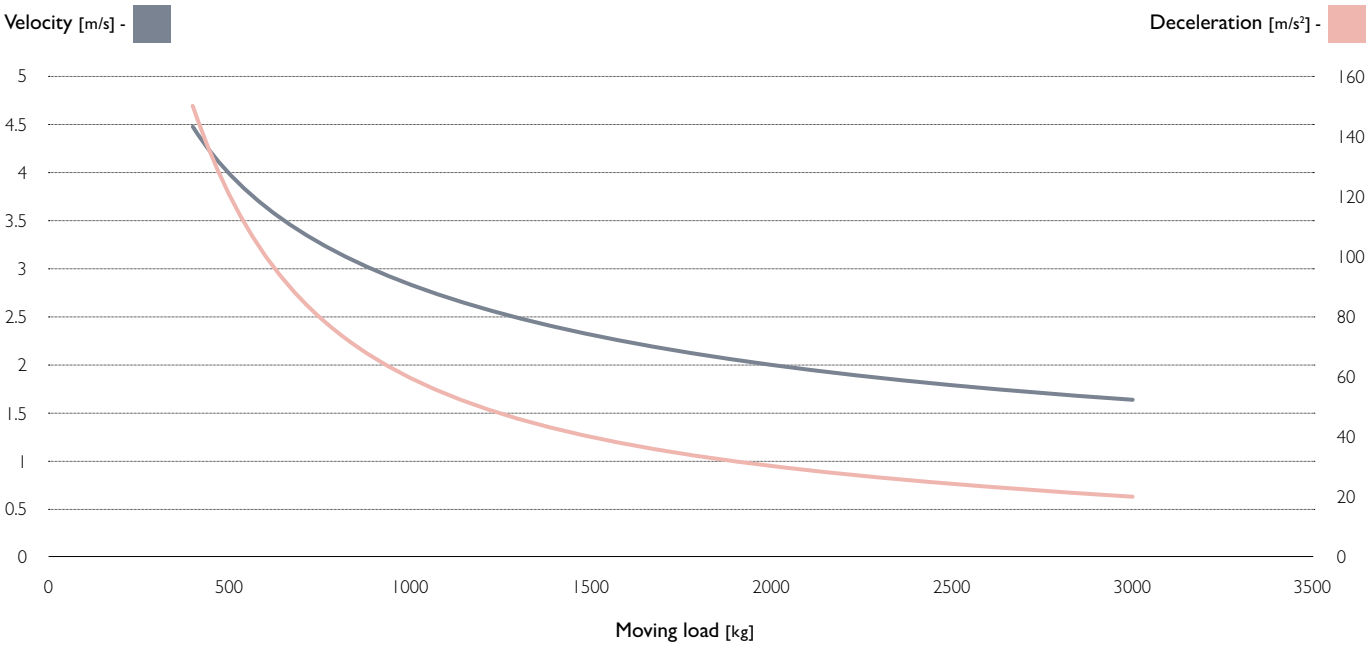

Area below the **velocity** curve is permissible.
The **deceleration** curve shows the deceleration occurring with a corresponding moving load.

Absorber P686

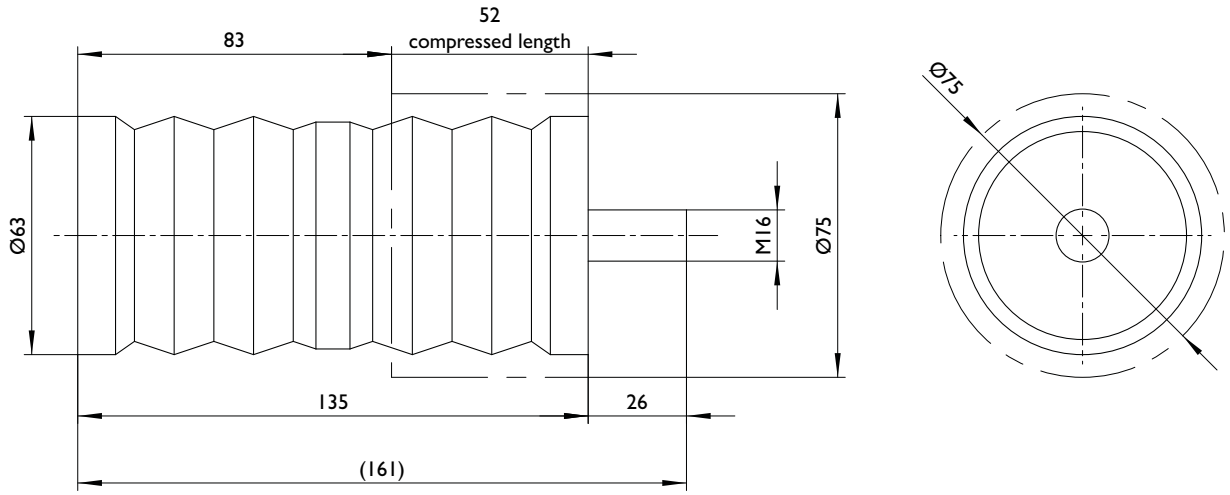

Geometrical data

Type	Max. compression length	Deformation diameter	Max. permitted energy/work [Nm]	Max. reaction force [N]	M [kg]	Part No.
P686	83	75	5275	78000	0.7	10135521

Moving load P474

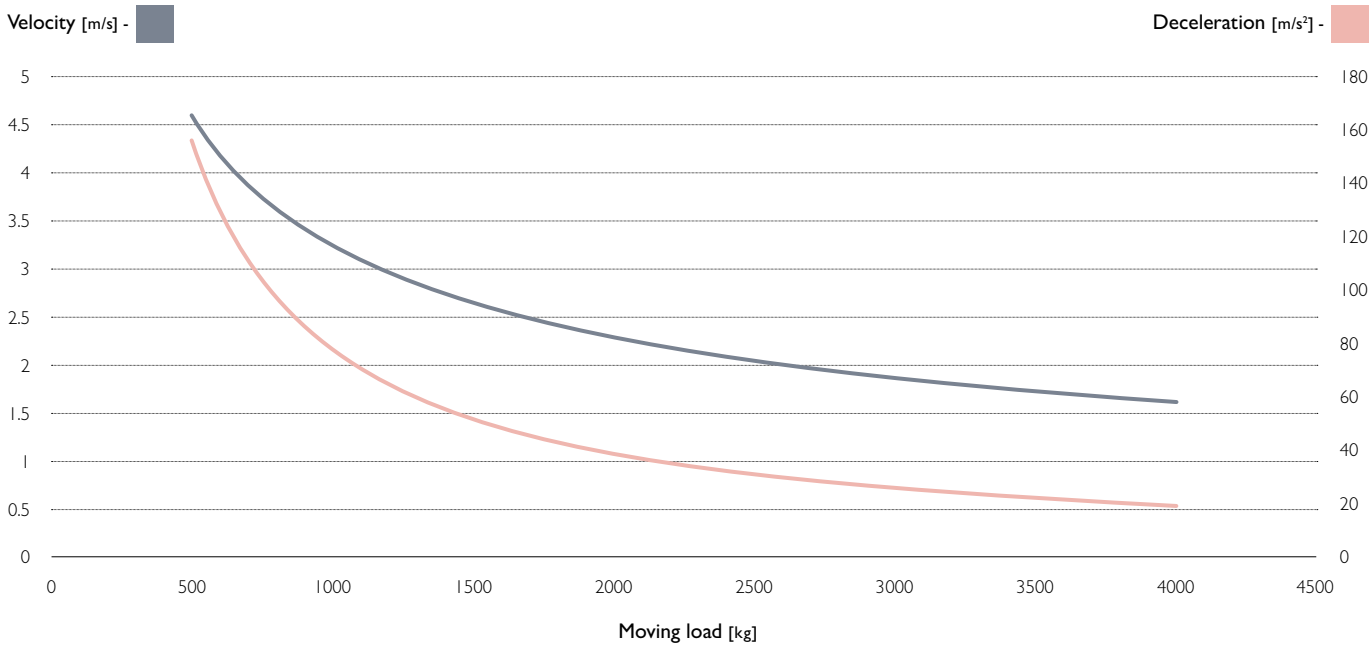

Area below the **velocity** curve is permissible.
The **deceleration** curve shows the deceleration occurring with a corresponding moving load.

Clamping element pneumatic

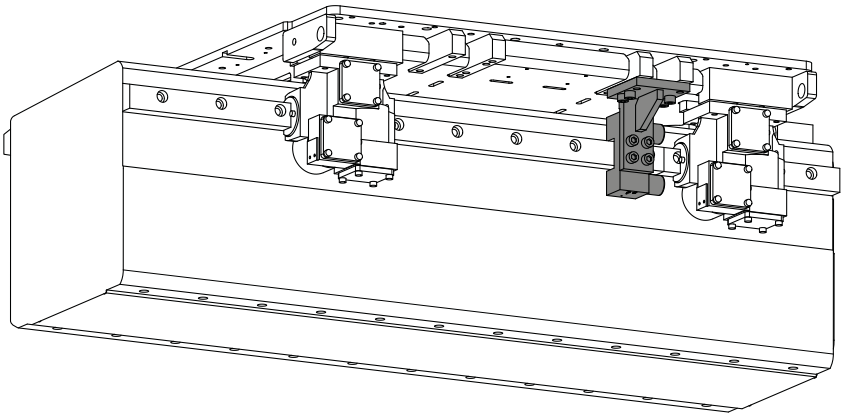

Geometrical data

Guideway rail	Type	Theoretical holding force [N] (µm 0.1)	Verified holding force [N]	Part No.	Operating pressure [bar]
S2937	MKS4500F (NC)	4100	3300	10196870	6
	MK4500F (NO)	3100	2500	10196874	6
S3547	MKS5500G (NC)	2800	2250	10196875	6
	MK5500G (NO)	2800	2250	10196877	6

Use the Güdel clamping element for maximum positioning accuracy.
It has been designed for highest holding forces at small installation dimensions.
The clamping force applied by the spring does not act on the guideway rollers.
It is released pneumatically.
Several clamping elements can be used to increase the holding force.

100%
100%
GÜDEL
GÜDEL H1
75%
75%
NSF
50%
Reg. – Nr. 136324
50%
Art.-Nr. 0206399
Charge:8F4583
filling date 07/2018
Inhalt / content 400 ml
25%
25%
Safety data sheet available on
www.gudel.com
Do not discharge into drains or rivers.
1.2

Lubrication

GÜDEL

The optimal lubrication for smooth processes

Güdel racks and pinions are of high precision and quality. Our modular system enables us to meet a wide variety of needs. Due to Güdel's vertically integrated product range, we know how our components work together smoothly. We offer the appropriate lubrication pinions, fastening axles and lubricators to match your systems. An optimal lubrication film on the rack and pinion is achieved by a carefully measured quantity of grease, distributed by the lubrication system and lubrication elements. The lubrication pinion additionally cleans the teeth so that dirt particles and contaminants are removed with the lubrication process.

Lubrication system

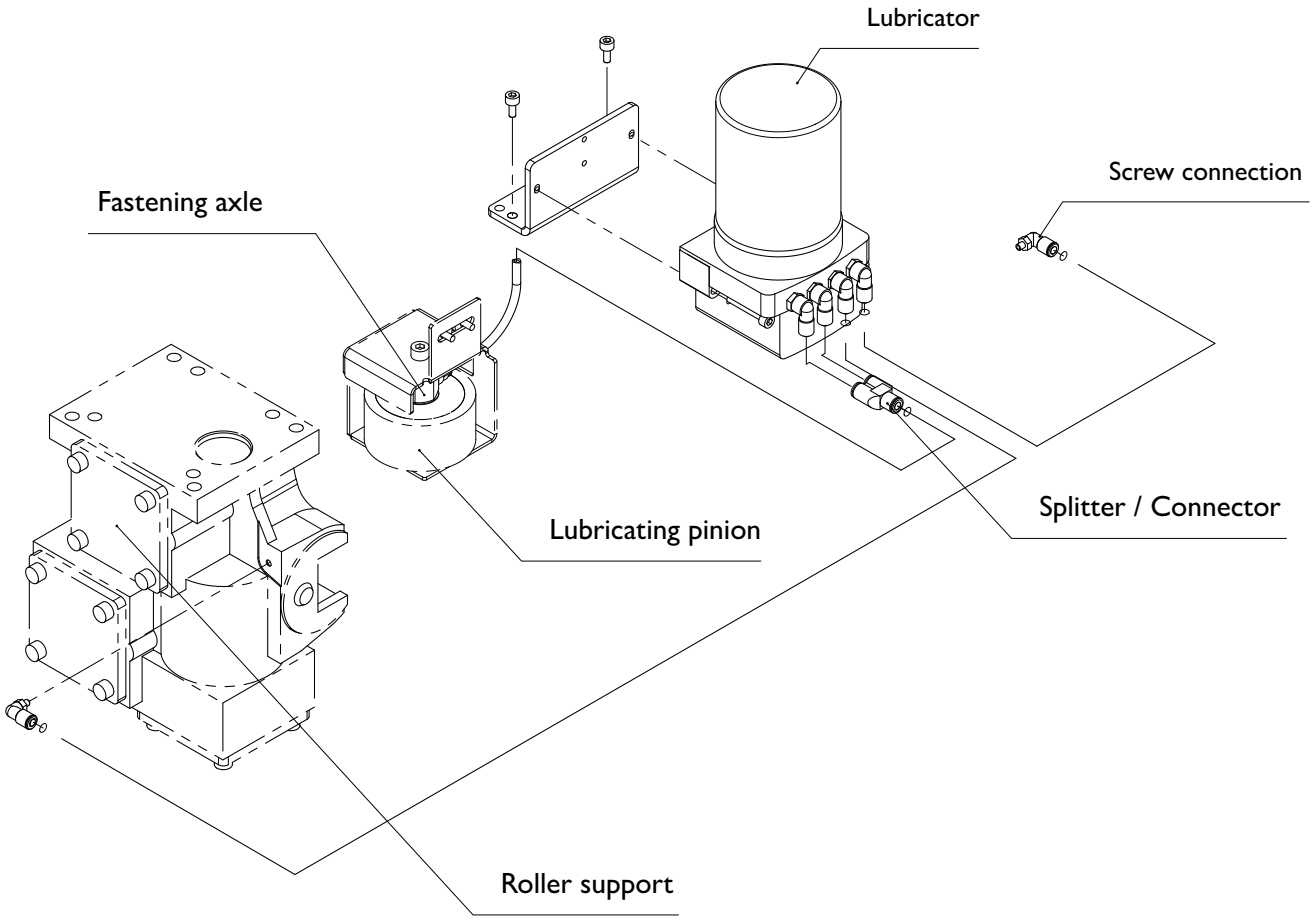

Detailed instructions can be found in our operating manual.

Lubricating pinion

To ensure that the rack-and-pinion drives have a long service life, they must be lubricated regularly.
The polyurethane foam lubrication pinion takes on the task and is available in the versions SL and SR - lubrication of the rack or lubrication of the pinion. The properties of the polyurethane foam allow the lubricant to be stored and gradually released, thus achieving an optimum lubricating film.

Lubrication quantity

Refer to the following diagram for the lubricant requirement of pinion and rack.
Half the quantity is required for lubrication of the roller and rail.

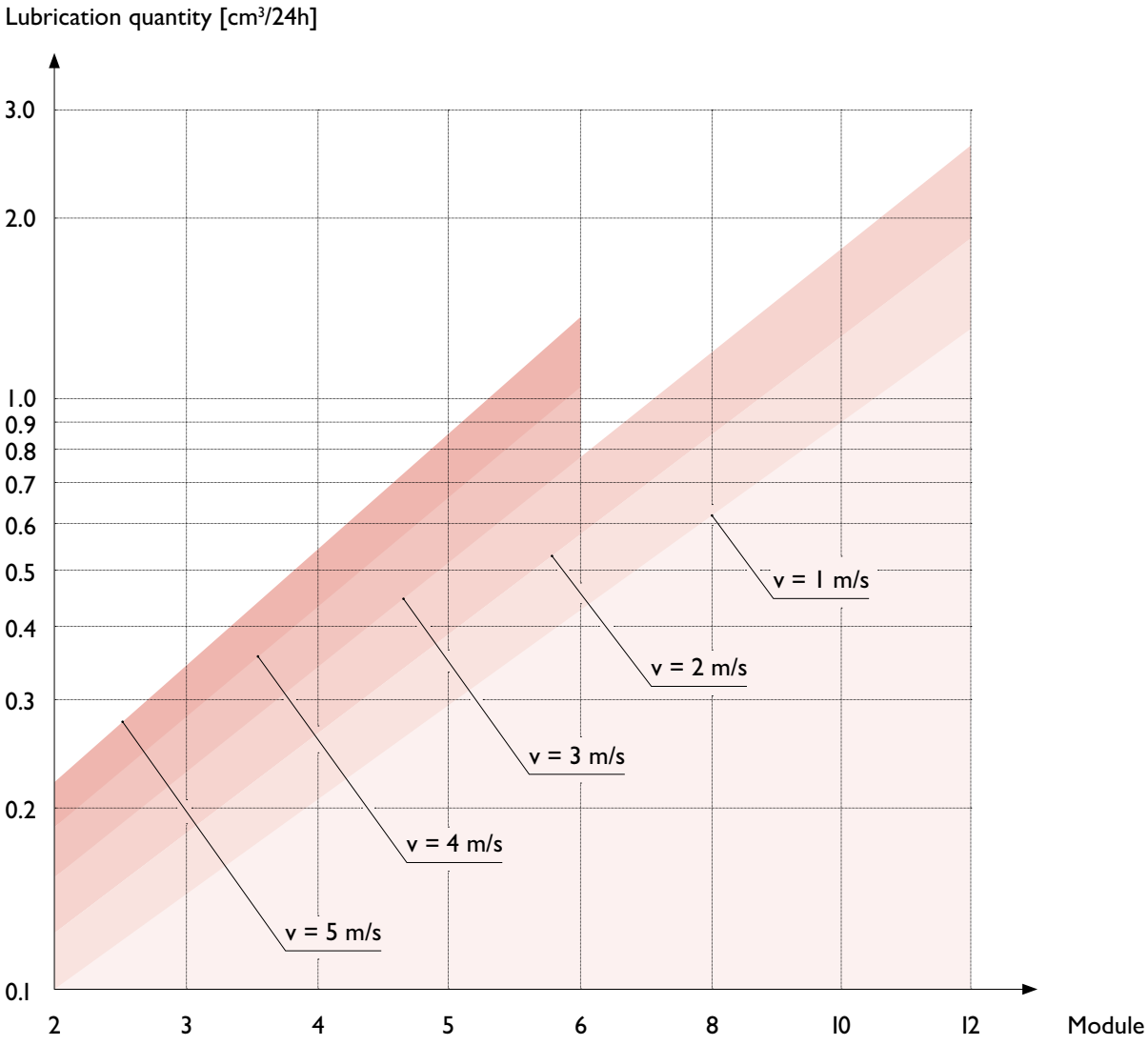

Lubricator

Dimensions (B x H x T)	[mm]	Max. 112 x 196 x 94
Weight	[g]	1120
Lubricant volume	[cm³]	400
Lubricant type		Oil or grease up to NLGI 3
Method of operation		Piston pump
Operating pressure	[bar]	Max. 70
Metering volume / stroke	[cm³]	0,15 (output / pulse signal)
Outlet		Rotating, right-angled hose connections 6 mm to 100 bar
Operating voltage	[VDC]	24
Current input	[mA]	I_{max} during operation 350 (regular < 200)
Fuse	[mA]	350 (characteristic: medium slow-blow or slow-blow)
Protection class		IP 65
Operating temperature	[°C]	-20 bis +70
Control		Integrated, microelectronic
Pressure monitoring		Integrated, electronic (system pressure measurement)
Fill level monitoring		Integrated; reed contact
Control connection		Connector; M12x1, 4-pole
Activation of progressive distributor		Suitable

Lubricator versions

Designation	404-DLS	402-Battery	402-24VDC
Outlets	4	2	2
Pump body	2	1	1
Lubricant	Güdel H1*	Güdel H1*	Güdel H1*
Part No.	0193906	10194590	0204578

Replacement cartridge

Designation	Cartrige Güdel H1
Lubricant volume	400 cm3
Lubricant type	Güdel H1*
Temperature range	10°C to 40°C
Part No.	0206399

* Güdel H1: high-performance lubricant with viscosity 4000 [mm2/s] at +40°C.
Food grade with H1 approval.
NSF registration number 146621.
In cartridges of 400 [ml].

Hoses, hose connectors and splitters

Designation	Splitter 2-fold	Splitter 3-fold	Connector	Hose Ø6/3mm	Screw connection straight	Screw connection angled
Thread / connection	Pluggable	Pluggable	Pluggable	–	M6x1/pluggable	M6x1/pluggable
Model / no. of outlets	2	3	2 zu 1	PA 12	–	90°
Hose diameter	Ø6/3	Ø6/3	Ø6/3	Ø6/3	Ø6/3	Ø6/3
Part No.	0193908	0204580	0193909	0193912	0193910	0193911

The splitters divide the lubrication to equal quantities.

2-fold splitter

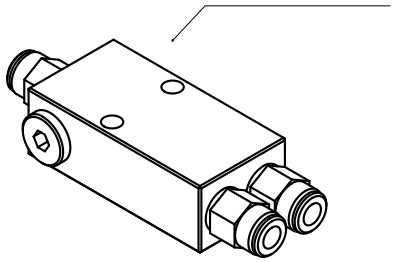

3-fold splitter

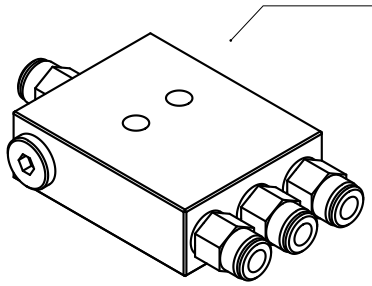

The connector combines two hoses into one lubrication point.

Connector

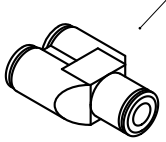

Lubricating pinion - Helical teeth, modular pitch

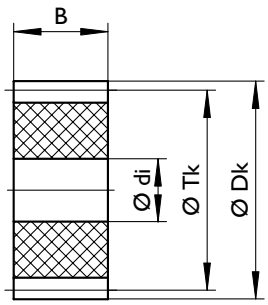

Geometrical data

Module	Number of teeth	Type	Use	B	D_k	d_i	T_k	Part No.
3	17	SL	Rack	30	60.1	12	54.11	0193925
		SR	Pinion					–
4	17	SL	Rack	40	80.1	12	72.15	0193926
		SR	Pinion					0212416

SL: Lubricating pinion left, SR: Lubricating pinion right

Fastening axle straight

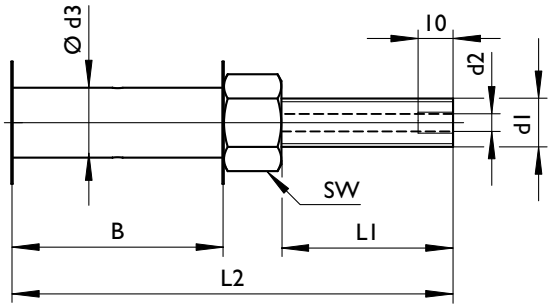

Geometrical data

Type	d3	B	L1	L2	d1	d2	SW	Part No.
A	12	30	30	71.2	M10	M6	17	10392666
A	12	40	30	81.2	M10	M6	17	10392667

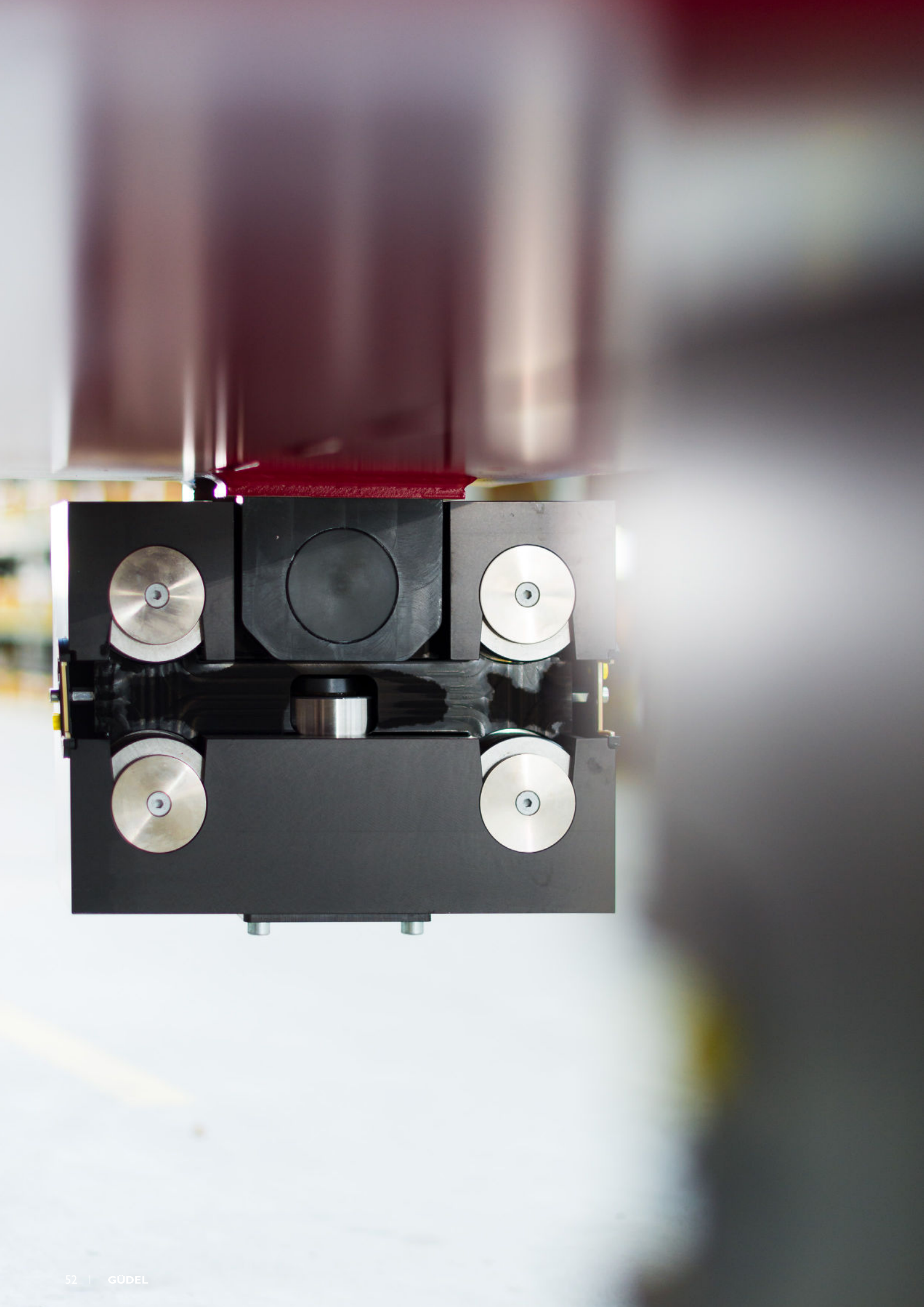

Technical information

GÜDEL

Dimension your roller support

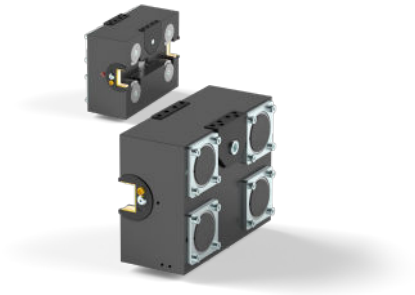

Load type

Single-stage load

Determine the maximum radial forces
F_1, F_2, F_3 [N]

Determine the dynamic equivalent loads
P_1, P_2, P_3 [N]

Multi-stage load

Determine the individual maximum radial forces per load stage
$F_{1\,(1,\,2,\ldots,\,z)}$ [N]
$F_{2\,(1,\,2,\ldots,\,z)}$ [N]
$F_{3\,(1,\,2,\ldots,\,z)}$ [N]

Perform calculation for each load direction (F_1, F_2, F_3) individually on the roller support

Determine the individual loads of the application
$P_{1\,(1,\,2,\ldots,\,z)}$ [N]
$P_{2\,(1,\,2,\ldots,\,z)}$ [N]
$P_{3\,(1,\,2,\ldots,\,z)}$ [N]

For force direction 1	For force direction 2	For force direction 3
$P_1 = F_1$	$P_2 = F_2$	$P_3 = F_3$
$P_{1\,(1)} = F_{1(1)}$	$P_{2\,(1)} = F_{2(1)}$	$P_{3\,(1)} = F_{3(1)}$
$P_{1\,(2)} = F_{1(2)}$	$P_{2\,(2)} = F_{2(2)}$	$P_{3\,(2)} = F_{3(2)}$
$P_{1\,(z)} = F_{1(z)}$	$P_{2\,(z)} = F_{2(z)}$	$P_{3\,(z)} = F_{3(z)}$

Determine the time slice of the individual load spectrum stages within the total operation time of the application
$q_{(1)}$, $q_{(2)}$,..., $q_{(z)}$ [%]

$q_{(1)} + q_{(2)} + \ldots + q_{(z)} = 100\,\%$

Determine the linear constant speed of the individual load spectrum stages
$v_{(1)}$, $v_{(2)}$,..., $v_{(z)}$ [mm/s]

Determine the linear mean velocity of the application
v_m [mm/s]

$$v_m = \frac{v_{(1)} \times q_{(1)} + v_{(2)} \times q_{(2)} + \ldots}{100}$$

Determine the effective mean equivalent load
P_{1eq} [N]
P_{2eq} [N]
P_{3eq} [N]

$$P_{1eq} = \sqrt[\frac{10}{3}]{\frac{q_{(1)} \times v_{(1)} \times P_{1(1)}^{\frac{10}{3}} + q_{(2)} \times v_{(2)} \times P_{1(2)}^{\frac{10}{3}} + \ldots}{100 \times v_m}}$$

Similarly for P_{2eq} and P_{3eq} with $P_{2\,(1,\,2,\ldots,\,z)}$ and $P_{3(1,\,2,\ldots,\,z)}$

Determine the operating factor
f [-]

Service factor f	
Quiet	1.0... 1.2
Moderate impacts	1.1... 1.5
High demands	1.25... 2.5

Determine the effective loads
P_{1w} [N]
P_{2w} [N]
P_{3w} [N]

Single-stage load	Multi-stage load
$P_{1w} = f \times P_1$	$P_{1w} = f \times P_{1eq}$
$P_{2w} = f \times P_2$	$P_{2w} = f \times P_{2eq}$
$P_{3w} = f \times P_3$	$P_{3w} = f \times P_{3eq}$

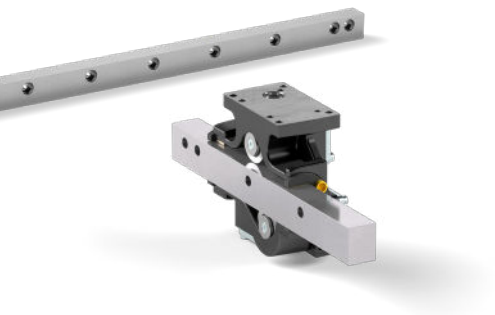

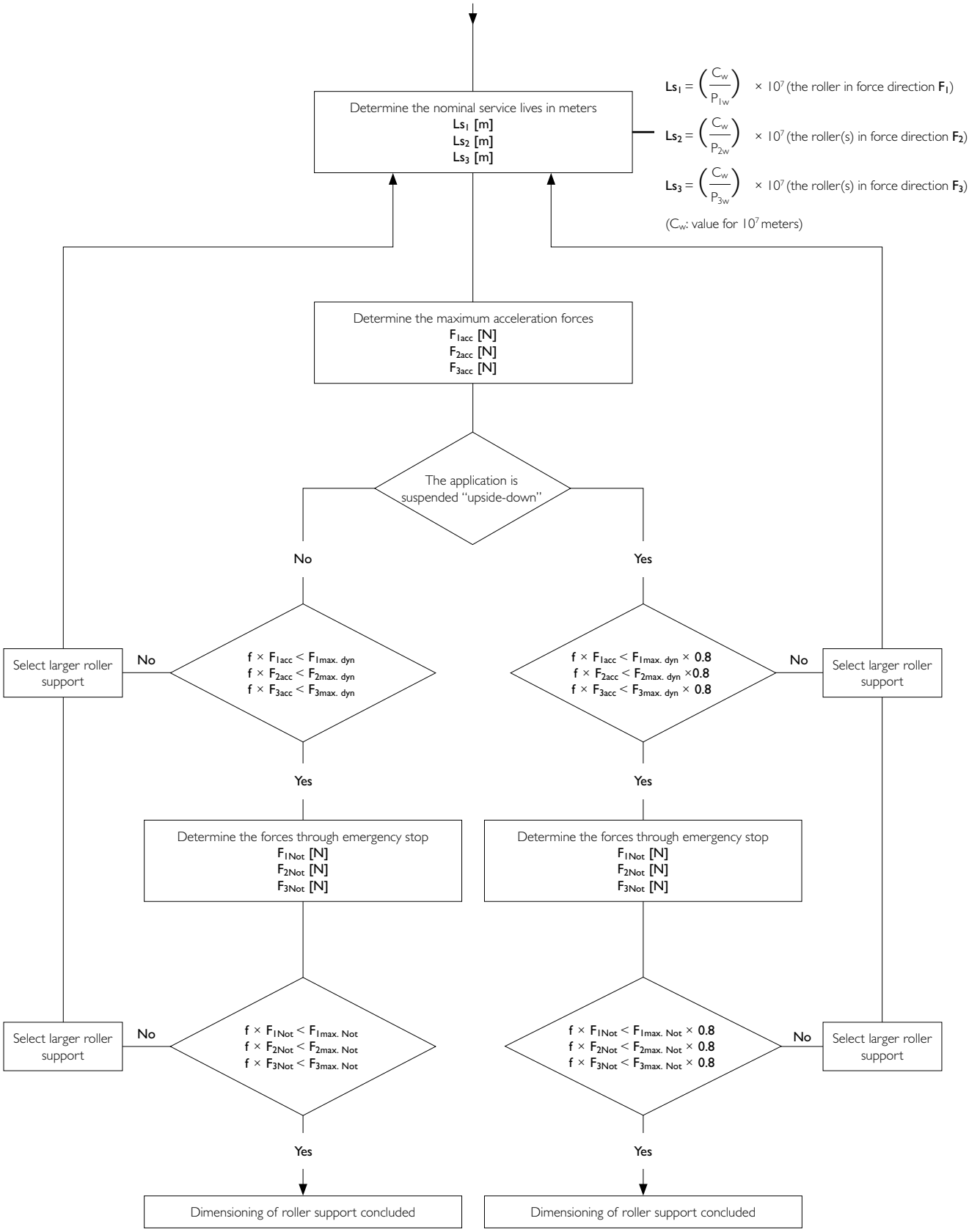
Determine the nominal service lives in meters
Ls1 [m]
Ls2 [m]
Ls3 [m]
Ls1 = (Cw / P1w) × 10^7 (the roller in force direction F1)
Ls2 = (Cw / P2w) × 10^7 (the roller(s) in force direction F2)
Ls3 = (Cw / P3w) × 10^7 (the roller(s) in force direction F3)
(Cw: value for 10^7 meters)
Determine the maximum acceleration forces
F1acc [N]
F2acc [N]
F3acc [N]
The application is suspended "upside-down"
No
Yes
f × F1acc < F1max. dyn
f × F2acc < F2max. dyn
f × F3acc < F3max. dyn
f × F1acc < F1max. dyn × 0.8
f × F2acc < F2max. dyn ×0.8
f × F3acc < F3max. dyn × 0.8
Select larger roller support
Determine the forces through emergency stop
F1Not [N]
F2Not [N]
F3Not [N]
f × F1Not < F1max. Not
f × F2Not < F2max. Not
f × F3Not < F3max. Not
f × F1Not < F1max. Not × 0.8
f × F2Not < F2max. Not × 0.8
f × F3Not < F3max. Not × 0.8
Dimensioning of roller support concluded

Calculation of rack and pinion

Determine max. application force F_{2b}

Rack and pinion

Determine operation mode factor f_l

Pulsating load (one direction) $f_l = 1.0$

Alternating load (bi-directional) $f_l = 1.55$

Determine lifetime factor f_c

Load cycles ≤ 1*10^6 $f_c = 1.0$

Virtually unlimited lifetime

	Z>20	Z<20
Rack Q6 f_c	1.35	1.75
Rack Q9 f_c	1.50	2.50
Rack Q7 f_c	2.50	2.50

Application-specific safety factor* f_s

* Based on experience 1 to 4
Recommendation: $f_s > 1.5$
Contact Güdel for additional information.

Determine max. acceleration force** $F_{2b}f$

** $F_{2b}f = F_{2b} \times f_l \times f_c \times f_s$

Select rack

$F_{2b}f < F_{2B}$

No

Select larger rack

Select the matching pinion for the selected rack

Your ideal drive train combined with our high precision planetary and high performance angle gearboxes

Güdel offers high precision planetary and high performance angle gearboxes suitable to the calculated rack and pinion requirements of your application. The flowchart for calculating your ideal drive train can be found in the relevant gearbox catalogue.

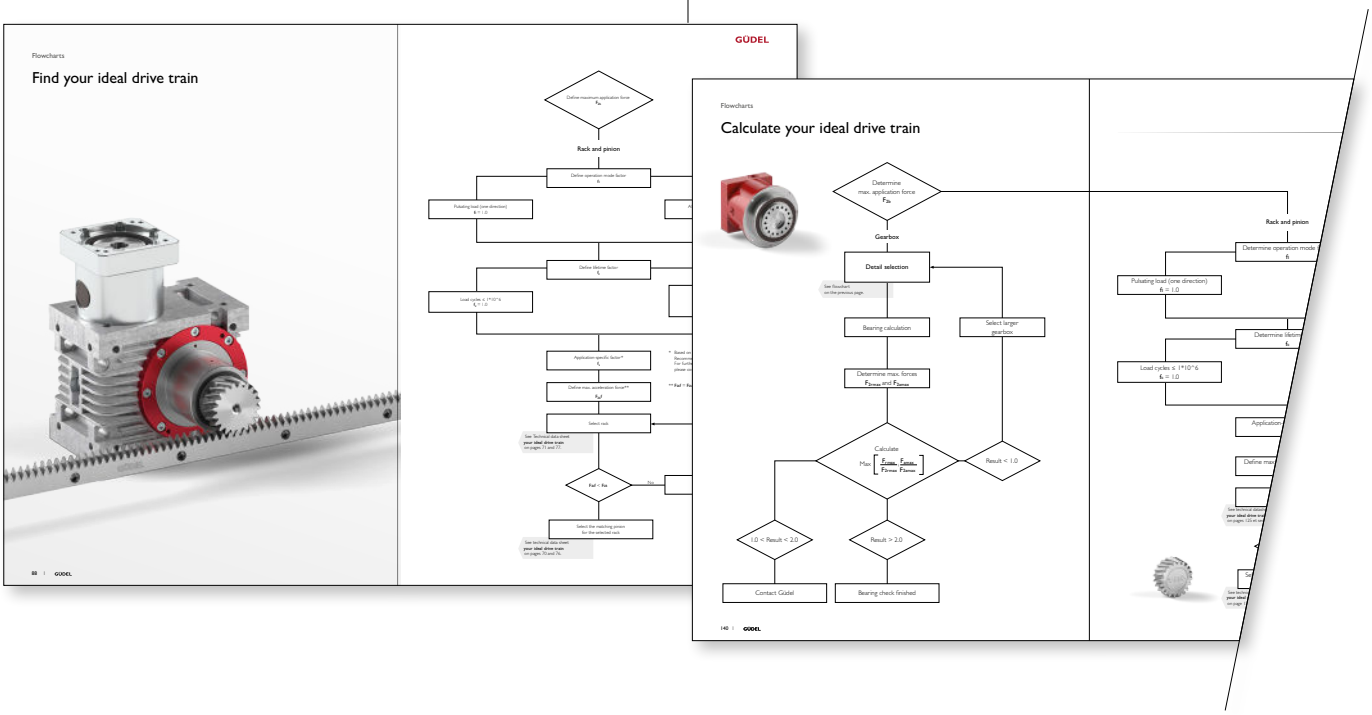

GÜDEL
GÜDEL
GÜDEL

Güdel worldwide

GÜDEL

Contacts

Europe

Switzerland
Güdel Group AG (Headquarters)
Gaswerkstrasse 26
4900 Langenthal
Phone +41 62 916 9191
info@ch.gudel.com

Güdel AG
Gaswerkstrasse 26
4900 Langenthal
Phone +41 62 916 91 91
info@ch.gudel.com

Austria
Güdel GmbH
Schöneringer Strasse 48
4073 Wilhering
Phone +43 7226 20690 0
info@at.gudel.com

Netherlands
Güdel AG
Eertmansweg 30
7595 PA Weerselo
Phone +31 541 66 22 50
info@nl.gudel.com

Czech Republic
Güdel a.s.
Holandská 10
63900 Brno
Phone +420 519 323 431
info@gudel.cz

France
Güdel SAS
Tour de l'Europe 213
3 Bd de l'Europe
68100 Mulhouse
Phone +33 1 69 89 80 16
info@fr.gudel.com

Güdel Sumer SAS
Le Roqual
Zone industrielle
Carsac-Aillac
24200 Sarlat-la-Canéda
Phone +33 5 53 30 30 80
gudel-sumer@fr.gudel.com

Germany
Güdel Germany GmbH
(German Headquarters)
Industriepark 107
74706 Osterburken
Phone +49 6291 6446 0
info@de.gudel.com

Güdel Germany GmbH (Altenstadt)
Carl-Benz-Strasse 5
63674 Altenstadt
Phone +49 6047 9639 0
info@de.gudel.com

Güdel Intralogistics GmbH
Gewerbegebiet Salzhub 11
83737 Irschenberg
Phone +49 8062 7075 0
intralogistics@de.gudel.com

Italy
Güdel S.r.l.
Strada per Cernusco, 7
20060 Bussero (MI)
Phone +39 02 9217021
info@it.gudel.com

Poland
Güdel Sp. z o.o.
ul. Legionów 26/28
43-300 Bielsko - Biała
Phone +48 33 819 01 25
info@pl.gudel.com

Russia
Güdel AG
Yubileynaya 40
Office 1902
445057 Togliatti
Phone +7 8482 775444
info@ru.gudel.com

Spain
Güdel AG
Avinguda de Catalunya 49B
1º 3ª
08290 Cerdanyola del Vallés,
Barcelona
Phone +34 644 347 058
info@es.gudel.com

United Kingdom
Güdel Lineartec (U.K.) Ltd.
Unit 5 Wickmans Drive
Banner Lane
CV4 9XA Coventry, West Midlands
Phone +44 24 7669 5444
info@uk.gudel.com

Americas

Brazil
Güdel Lineartec
Comércio de Automção Ltda.
Rua Américo Brasiliense
nº 2170, cj. 506
Chácara Santo Antonio
São Paulo, CEP 04715 - 005
Phone +41 62 916 91 91
info@ch.gudel.com

Mexico
Güdel TSC S.A. de C.V.
Gustavo M. Garcia 308
Col. Buenos Aires
Monterrey, N.L. 64800
Phone +52 81 8374-2500
info@mx.gudel.com

USA
Güdel Inc.
4881 Runway Blvd.
Ann Arbor, MI 48108
Phone +1 734 214 0000
info@us.gudel.com

Asia Pacific

China
Güdel International Trading Co. Ltd.
Block A, 8 Floor, C2 BLDG
No. 1599 New Jin Qiao Road
Pudong
Shanghai 201206
Phone +86 21 5055 0012
info@cn.gudel.com

India
Güdel India Pvt. Ltd.
Gat no. 458-459
Mauje Kasar Amboli
Pirangut, Tal.Mulshi
Pune 412 111
Phone +91 20 679 10200
info@in.gudel.com

South Korea
Güdel Lineartec Inc.
7-15 Incheon tower
daero 25beon gil.
Post no. 22013
Yeonsu gu Incheon
Phone +82 32 858 0541
info@kr.gudel.com

Taiwan, China
Güdel Lineartec Co. Ltd.
No. 99, An-Chai 8th St.
Hsin-Chu Industrial Park
30373 Hu-Ko, Hsin-Chu
Phone +88 635 97 8808
info@tw.gudel.com

Thailand
Güdel Lineartec Co. Ltd.
19/28 Private Ville Hua Mak Road
Hua Mak Bang Kapi
10240 Bangkok
Phone +66 2 374 0709
info@th.gudel.com

© Güdel AG
We have taken the greatest care in compiling this catalog with specifications and technical information. Please understand that we accept no liability for misprints, technical changes, or consequential damage in relation to the published information. The catalog is purely for information purposes, so the illustrations and information in no way represent guaranteed properties. The text, photos, drawings, and any other display formats in this catalog are intellectual property of Güdel AG. Please note that any duplication, editing, translation, saving, or any other subsequent use of the catalog or its components in print or electronically may only be carried out with the previous, express consent of Güdel AG. Güdel AG reserves the right to modify the provided information at any time in order to always be able to present you with the most up-to-date version of our catalog and products.