VALVE TECHNOLOGY

Original instructions

SD7 - AT200

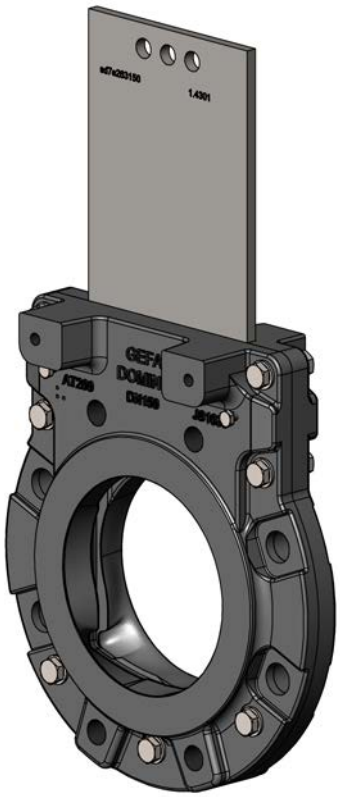

PROCESSTECHNIK GMBH

Germaniastraße 28 • D-44379 Dortmund
Tel.: +49 (0)231 / 61 00 9-0 • Fax: +49 (0)231 / 61 00 9-80
Internet: www.gefa.com • E-Mail: gefa@gefa.com

Version 6 • DocID 103745163

Table of contents

1 Imprint 4

2 Safety instruction 5

2.1 Used information and warning signs 5
2.2 Intended Use 6
2.3 User 6
2.4 Improper use 6
2.5 Due diligence of the operator 6
2.6 Product safety 7
2.7 Product-specific dangers 7
2.8 Outflowing media 7
2.9 Failure of actuator operating power 7
2.10 Mounting of actuators 8

3 Scope of supply 9

3.1 Exploded view drawing 9
3.2 Components 9

4 Transport and storage 10

5 Mounting and initial operation 11

5.1 Installation conditions 12
5.2 Installation position 13
5.3 Initial operation 15
5.4 Mounting instructions 18
5.5 Impermissible operation 19

6 Operation 20

7 Maintenance and repair 21

7.1 Maintenance 21

8 Decommissioning and disposal 23

8.1 Decommissioning 23
8.2 Dismantling the valve 24
8.3 Disposal 24

9 Technical data and materials 25

9.1 Data sheet DN50-300 with handwheel 25
9.2 Data sheet DN350-500 with handwheel 26
9.3 Data sheet DN50-200 with hand lever 27
9.4 Data sheet DN50-300 with square 28
9.5 Data sheet DN350-500 with square 29
9.6 Data sheet DN500-1200 with gear 30
9.7 Data sheet DN50-300 with pneumatic cylinder 31
9.8 Data sheet DN350-700 with pneumatic cylinder 32
9.9 Data sheet DN50-200 with spring-return pneumatic cylinder 33
9.10 Data sheet DN50-300 with electric actuator 34
9.11 Data sheet DN350-1200 with electric actuator 35
9.12 Data sheet DN50-300 with hydraulic cylinder 36
9.13 Data sheet DN350-1200 with hydraulic cylinder 37
9.14 Data sheet DN50-400 with deflection cone 38
9.15 Materials Gate valve AT 39

10 How to proceed in case of malfunctions 40

11 Annex 42
11.1 Mounting of operating elements 42

1 Imprint

Read the operating instructions thoroughly before installing your valve. Failure to follow these instructions or the warning and safety labels could result in serious injury or property damage. These operating instructions must be available to all users at all times. GEFA Processtechnik GmbH is not liable for unauthorized changes of the device or for improper use.

All rights reserved GEFA Processtechnik GmbH

GEFA Processtechnik GmbH
Germaniastraße 28
44379 Dortmund, Germany
Tel: +49(0)231-61009-0
Fax: +49(0)231-61009-80
E-Mail: gefa@gefa.com

2 Safety instruction

This chapter contains basic instructions for the safe handling of this valve.

Observe all instructions for transport, storage, installation, commissioning, maintenance and decommissioning as well as disposal. In explosive arenas, the relevant standards, the specifications of the manufacturer and the risk assessment must be observed

Failure to observe safety instructions may result in personal injury and / or property damage.

The safety instructions in this documentation are uniform and marked with an icon on the left side of the note. A signal word above the text indicates the hazard level. The color of the hazard word additionally signals the hazard level.

The warning notice also includes:

> Nature and origin of danger.
> Possible consequences of the danger.
> Measures to avoid the danger.

If more than one hazard level occurs, the safety notice for the highest level is used.

	Nature and origin of danger. Possible consequences of the danger. Measures to avoid the danger.

Signal words for warnings

The signal word identifies the severity of the hazard that occurs if it is not avoided.

DANGER	Means: Serious personal injury threatens immediately.
WARNING	Means: Serious personal injury may be imminent.
CAUTION	Means: Light / medium personal injury threatens immediately.
NOTICE	Means: property damage threatens directly or possibly.

2.1 Used information and warning signs

The warning sign represents a source of danger. Warning signs are located:

> At the device near the source of danger.
> In the operating instructions before the activity is described, which can be a hazard.

The following information and warning signs are used in this operating manual:

	**Safety Notice General**
	**Wear safety gloves**
	**Wear safety shoes**

Observe and obey all local safety regulations, safety precautions and operating instructions. These apply in addition to or in addition to the safety instructions stated and shown in this manual. If contradictory identifications occur, speak with the responsible authority. All PPE (personal protective equipment) must be provided by the user of the valve.

2.2 Intended Use

The valve is used exclusively for shutting off, throttling and regulating media flows under the Consideration of the data given on the valve and technical details given in this manual Data, diagrams, applications described and only in connection with the components, which are recommended by GEFA Processtechnik GmbH, approved and mentioned in this documentation.

The faultless and safe operation of the device requires proper transport, proper storage and installation as well as careful operation and maintenance. This documentation is part of the device and must be available at all times. Observe all safety regulations which are listed in this documentation.

The valve may only be operated in such a way that no fatigue stress occurs. Max. 500 pressure cycles at $\Delta p = PS$ or max. $500 / (\Delta p / PS)^3$ permissible equivalent pressure cycles (see DIN EN 13445-3 section 5.4.2). The valve may only be operated in this way within the scope of the DGRL.

The suitability of the product wetted parts used and their chemical resistance must be clarified before commissioning the system. The usual flow rates for this valve must not be exceeded. Changes or modifications to the device are not permitted. The improper use leads to the exclusion of any liability claims.

2.3 User

All work on the unit may only be performed by qualified personnel and together with this documentation. Qualified persons within the meaning of this documentation are those who are authorized to assemble, commission and mark devices, systems and connections in accordance with the standards of safety technology.

2.4 Improper use

Do not mount the valve if:

- Parts are obviously damaged.
- There is not enough free space to ensure easy operation of the hand levers, handwheels and manual emergency shifts.

Or the fitting as:

- Support member of the pipe guide is used.
- Riser is used.

This includes the actuators such as hand levers, gear operator, actuator, feedback and control systems.

2.5 Due diligence of the operator

It is the duty of care of the operator to plan and control all actions that ensure safety in the workplace.

In particular, the operator must ensure that:

- The valve is only used as intended.
- The valve is only operated in a perfect, fully functional condition.
- The safety regulations relevant to the installation site and generally applicable technical rules for the installation location must be observed.
- The permissible materials of the wetted parts are suitable for the media, pressures and temperatures used.

The operator must also ensure that the responsible personnel:

- Has the necessary qualifications to work with the valve.
- Has read and understood the operation instructions before working with the valve and follows the described instructions.
- Can clearly identify all safety signs required for the work.
- All necessary protective equipment is provided and must be worn.

2.6 Product safety

The valves of GEFA Processtechnik GmbH correspond to the state of the art and the prescribed safety rules, but nevertheless hazards can occur in connection with valves. The valve may only be operated in proper condition, in the intended area and under consideration of all associated documentation. Any change to the valve may only be made after approval by the manufacturer. The basic requirement for trouble-free operation is proper connection of the electrical, hydraulic and pneumatic lines.



⚠ WARNING

Improper use / excessive stress of the valve

The use of material incompatible media or operating outside the approved specification, exceeding the manufacturer's approved pressure and temperature limits, the use of the valve as a climbing aid, including all actuators (hand lever, gearbox, drive, feedback and control systems), and from the outside acting loads and shear forces due to additional stresses can lead to failure of the pressure-bearing parts and bursting of the valve.

2.7 Product-specific dangers



⚠ WARNING

Dangers relating to a valve

The flow medium, the control pressure, the temperature and moving parts can potentially pose a hazard. These potential hazards must be prevented by appropriate activities by the operator.

It is not permissible to reach into the valve at any time. In general, there is a risk of injury to moving parts.

2.8 Outflowing media



⚠ WARNING

Outflowing media

If harmful or environmentally hazardous media leak out (e.g. leaks or disassembly of the valve), they must be collected in such a way that there are no hazards to persons or the environment. Observe all applicable local regulations that apply to the disposal of the respective medium and the valve.

2.9 Failure of actuator operating power



⚠ WARNING

Failure of actuator operating power

In case of failure of actuator operating power, the valve could go into a state of insecurity for its intended use.

Choose your valve in such a way that if the actuator operating power fails, the valve can change into a safe operating state for its intended use.

2.10 Mounting of actuators

Observe the following notes for mounting of a valve actuator.



⚠ CAUTION

Ventilation of pneumatic components

a) During venting operations on pneumatic components, increased noise may occur.

⇨ Prevent this by suitable measures (silencer).



NOTICE

Mounting of actuators

Actuators must be installed in alignment with the valve stem. Tensions can lead to increased wear or leakage of the stem seal.

The weight of a built-up actuator must not load the stem of the valve on one side. Therefore actuators must be intercepted if necessary - without fixation.

Pneumatic or hydraulic actuators must be operated at the agreed design pressure. Pay attention to the maximum permissible operating pressure.

3 Scope of supply

3.1 Exploded view drawing

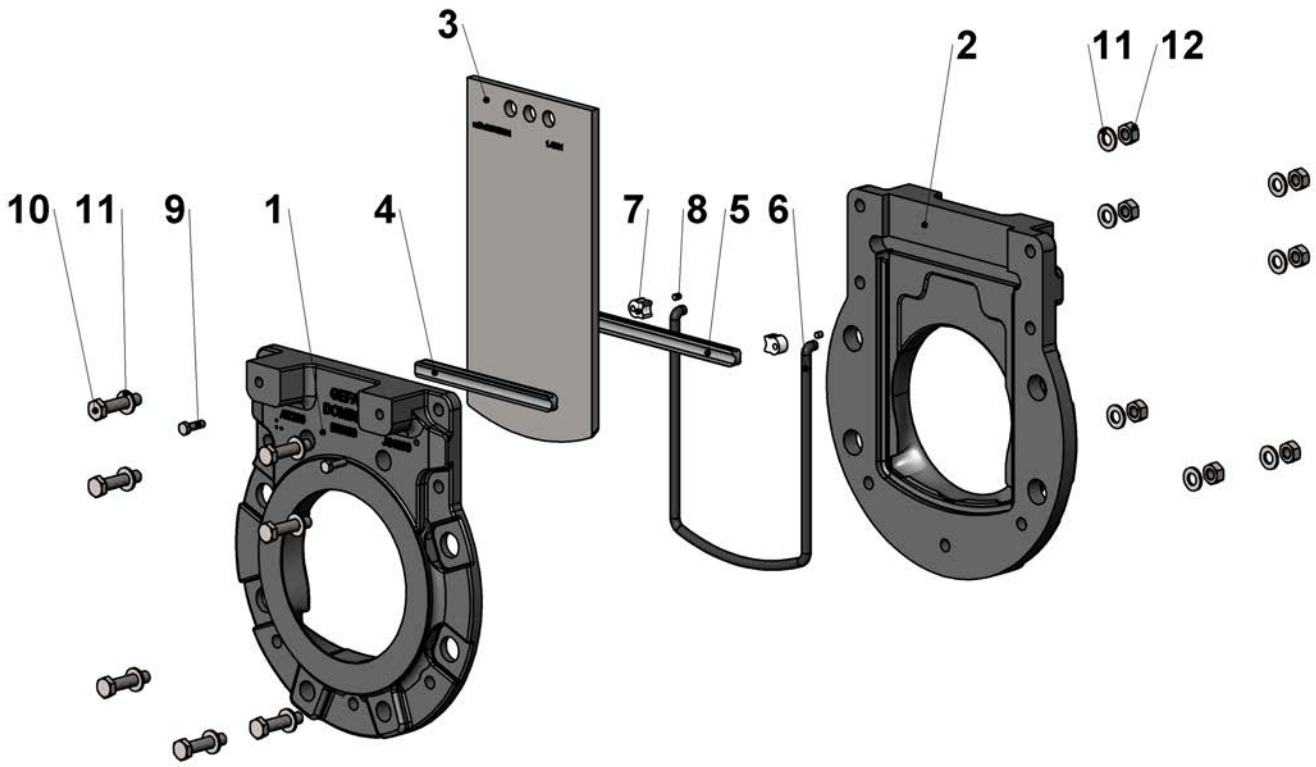

3.2 Components

Position	Description
1	Front body
2	Rear body
3	Gate valve plate
4	Compact cross seal
5	Compact cross seal
6	Round cord
7	Filling corner profile
8	Round kneading seal
9	Hexagon screw
10	Hexagon screw
11	Disc
12	Hexagon nut

4 Transport and storage



⚠ WARNING

Transport of the valve

Failure to comply with the transport instructions can result in significant personal injury(even death) and property damage.



NOTICE

Transport

The transport may only be carried out by qualified and authorized personnel with suitable protective equipment.

In order to guarantee a faultless function, pay attention to the following during transport and storage:

- The valve must be transported and stored dry and clean.
- During transport and intermediate storage the high performance butterfly valve should not be outside a temperature range of -15°C and +30°C.
- In humid rooms, a drying material or heating must be used to avoid condensation
- If the valves are painted (coated) on the outside, this coating must remain without damage, otherwise the faulty spots must be repaired immediately!
- The factory-adjusted basic setting (position of the disc at delivery) must not be changed.

The transport packaging protects the valve against soiling and damage, therefore it is important:

- do not remove the packaging until the valve is going to be installed.

To prevent damage and life-threatening injuries when transporting the valve:

- Impact and vibrations must be avoided.
- Only use suitable and approved load handling equipment and slings.
- When selecting the load suspension and slinging equipment, take the weight of the valve into account.
- The transportation routes must be blocked and marked, that no unauthorized person can enter the danger zone.
- Do not suspend large valve on the gearbox or flange! Protect the shut-off element and flange sealing surfaces against any damage!
- For valves that are delivered without actuation, the shut-off element is not secured against adjustment. It must be transported in such a way that it can not be opened from the closed position by external influences (eg vibration).

5 Mounting and initial operation

Before installing and initial operation of the valve, the customer is obliged to check the completeness and correctness of the scope of delivery. In particular, the suitability of the materials and the operating parameters such as nominal diameter, pressure rating, medium, operating temperatures and, if applicable, control characteristics should be verified with the intended operating conditions and the ambient conditions (piping system). If you have ordered additional parts or a customized valve, please check the details carefully.



⚠ WARNING

Damaged / incomplete valve

Damaged or incomplete valves no longer meet the safety requirements and must not be installed.



⚠ WARNING

Hazardous media

Work on parts in contact with hazardous media may only be carried out with appropriate protective equipment.



⚠ CAUTION

Earthing the valve

If the valve is supplied with anti-static device and used in potentially explosive zones, the body of the valve must be connected effectively at site with the potential compensation cable before the valve is put into operation.



NOTICE

Avoid vibration

Vibrations, water hammer and cavitation as well as abrasive media components lead to damage to the valve and impair the service life.



NOTICE

Approach end position „open”!

The end position is always approached from the open position. This is the only way to ensure that any clearance from the drive (eg gearbox) that is possibly present has no influence on the end position. If the exact end position is exceeded, bring the valve back into the open or partly open position. Then approach the end position again from the open position.

5.1 Installation conditions

In order to ensure trouble-free functioning of the valve, pay attention in the provided range of the fitting:

▪that the piping system must be routed, that damaging shear and bending stresses can not affect the valve body.

▪that there is enough free space available, that the operation of the hand lever, the hand wheel and the emergency and switching devices is easily possible.

> The valve must be installed between pipeline flanges according to DIN EN 1092-1, DIN 2501 or ANSI B16.5. It should be taken into account, that a valve which is designed for a particular flange standard cannot be normally used for other flanges.

> If pipeline flanges are to be used which are not in accordance with the specifications of the order, the manufacturer is to be consulted.

> The surfaces of the pipeline flanges between which the valve is installed have to be parallel to one another, the sealing surfaces must be clean and without damage. No cross marks may be visible.

> Flanges and pipes must not be completely welded when the valve is installed, as the valve can be damaged.

> The valve is installed with two suitable seals between two pipe flanges.

> Screws, nuts and seals are not included in the manufacturer scope of supply, but must be available during installation. All flange gaskets intended for the application can be used.

5.2 Installation position

Installation site

When selecting the installation site, it must be ensured that any functional checks, inspections or tests can be carried out on the valve at any time without risk.

The adjustment screw of the gate valve body must be freely accessible for the purpose of the existing resealing option.

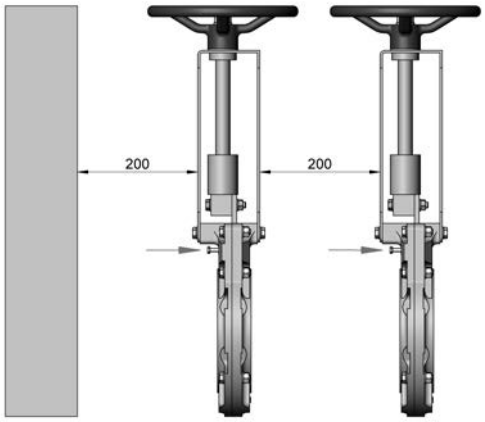

→ = Resealing possibility

⚠ CAUTION

If the installation site is located in an Ex zone, the relevant regulations and guidelines for the installation and operation of Ex systems must be observed.

Compliance with all safety requirements at the installation site must be checked. If the installation site is outdoors, the valve must be structurally protected against the effects of weather such as frost and snow by means of a cover.

⚠ CAUTION

Earthing the valve

If the valve is supplied with anti-static device and used in potentially explosive zones, the body of the valve must be connected effectively at site with the potential compensation cable before the valve is put into operation.

Installation position

The figure shows the preferred installation positions of the valve.

Other installation positions should be avoided if possible.

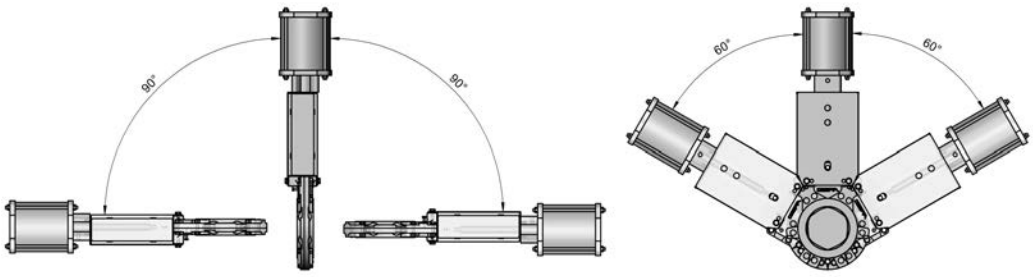

Heavy and widely projecting valves and generally valves from DN350 must be structurally supported if they cannot be installed vertically.

This is particularly true when heavy actuators generate high bending moments on structural components.

Structural support is also recommended whenever vibrations in the piping system cannot be ruled out.

Flow and pressure direction

> Flow and pressure directions are possible on both sides of the knife gate valve.

> Depending on the application and the valve equipment, there may be preferred pressure and flow directions which must be observed as follows.

Liquid, gaseous and pneumatically conveyed solid media	
Flow direction	Possible from both sides (A,B)
	When using a wear ring from the inlet side (B)
Pressure direction	Against plate slope preferred (A)

Powder and granules with gravity discharge (Vertical pipeline)	
Flow direction Pressure direction	The slope of gate valve plate is on the downstream side, also when using inlet cones (B)

Especially when operating gate valves in the upper third of the maximum operating pressure (between 60 and 100%), the preferred pressure direction must be observed.

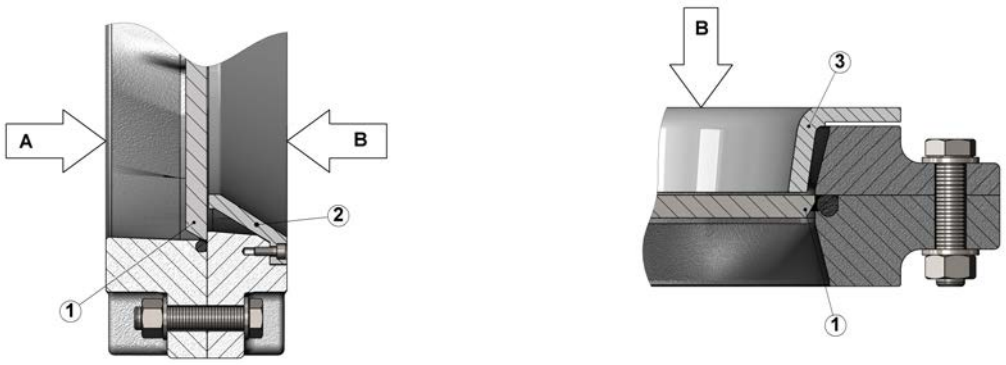

1	Knife gate valve
2	Wear ring (optional)
3	Deflection cone / retracted passage (optional)

When using valves of special design and/or under difficult operating conditions, it is advisable to consult the manufacturer.

5.3 Initial operation

Factory-provided the valve was tested for leaks with air or water. Remains of the test medium may still be present at the contact surfaces of the valve. Pay attention to any reactions with the operating medium. Before installing the valve, flush the pipeline and remove any general impurities, welding residues, etc. Remove the transport packaging shortly before fitting the valve to avoid damage during transport.

Before putting the valve into operation:

▪check that all necessary connections (e.g. compressed air connections) are connected and secure.

▪flush the pipeline with the valve completly open to remove any impurities (such as welding residues) that may have occurred during installation.

▪check the function of the valve. If there is any doubt about the function, replace the valve.

During a system pressure test the following pressures must not be exceeded:

> 1,5 x PS with shut-off element in open position

> 1.1 x ΔPmax (maximum allowable differential pressure) or 1.1 x PS (maximum allowable pressure) with the shut-off element closed, the lower value must be used.

NOTICE

Flushing process

The valve must not be switched during the flushing process.

In particular, if hydroscopic substances such as dusty or granular media are to be shut off, assembly-related wetness and moisture must be thoroughly removed before commissioning, as this can lead to caking of the medium.

The valves are sufficiently lubricated at the factory for damage-free transport and storage. Relubrication may be necessary before commissioning, depending on the operating conditions. The use of a hydrophobic, temperature resistant and durable grease is recommended. Recommendations can be obtained from lubricant manufacturers.

In the case of factory-automated valves, moving parts are protected with a suitable cover. Protection goals can also be achieved by suitable precautions on the system side. Unprotected valves must not be put into operation.

When transporting hot media in the pipelines, safety precautions must be taken to prevent people from coming into contact with the hot surfaces and injuring themselves.

⚠ CAUTION

Pneumatically operated gate valves

a) The maximum working pressure of 8 bar must not be exceeded even in the event of a fault. Appropriate safety measures must be provided.

b) Dry, filtered air corresponding to class 7:4:2(4) according to ISO 8573-1 is required for operation of the actuator.

⇨ Dirt particle size: max. 10 mg/m³; particle size max. 40 µm

⇨ Moisture content and water: ≤ +3°C

⇨ Total residual oil content for bio-oils: ≤ 1 mg/m³ (class 2), for mineral oils: ≤ 5 mg/m³ (class 4).

⇨ Pressure dew point below minimum ambient temperature

⇨ Control valves shall be mounted as close as possible to the cylinder. The air cleanliness classes for the control valves can be found in the separate instructions from the manufacturers.



⚠ DANGER

Pneumatically operated gate valves

Air lines, in particular plastic pipes, must be secured against unintentional interruption or tearing off.

To ensure the tightness of the gate valve in the closed position, the piston must be kept under pressure.

The cross-section of the compressed air line must be adapted to the air volume.

All air lines already installed as well as pneumatic control valves must be checked, blown through and, if necessary, cleaned before commissioning.

As a rule, pneumatic control valves installed by us are not equipped with accessories such as throttles or silencers. The customer's regulations must therefore be observed.

Abrupt closing of pneumatically operated gate valves increases the risk of pressure surges and must therefore be avoided for safety reasons.



⚠ CAUTION

Control pressure / use of control media

For the pressurization of hydraulic and pneumatic cylinders, the specification of the control pressure is to be regarded as the maximum permissible upper limit. The maximum permissible control pressure is shown in the order confirmation. No other medium may be used instead of the specified oils or air.



⚠ DANGER

Oil-hydraulically operated gate valves

All control lines laid on site must be thoroughly cleaned before commissioning.

Abrupt closing of oil-hydraulically operated gate valves increases the risk of pressure surges and must therefore be avoided for safety reasons.

The maximum intended control pressure must be observed at all times, as excessively high control pressures can damage the valve.



⚠ CAUTION

Electrically operated gate valves

Relevant standards, regulations and ordinances must be observed before and during installation.

If the installation site is located in an Ex zone, the relevant regulations and guidelines for the installation and operation of Ex systems must be observed.

It must be checked whether the device meets all safety requirements at the installation site.

After installation, correct grounding must be verified.

It is recommended that our specially trained service technician be called in to ensure smooth installation and commissioning.

All on-site electrical installations must be carried out in accordance with the manufacturer's specified connection diagram.

Special operating instructions of the respective actuator manufacturer must also be observed.

The electric Knife gate valve are delivered preset. Despite careful factory settings, vibrations during transport, temperature influences in the system, etc. can cause the limit switches to be misaligned, or if the load on the analog position feedback is too high, the corresponding switches or potentiometers/electric position transmitters may need to be readjusted. In the event of excessive deviation, this can be readjusted on site by qualified commissioning personnel in accordance with these operating instructions in conjunction with the drive manufacturer's operating instructions, taking into account the relevant safety rules.

Before the electric actuator is put into operation for the first time, the valve must be moved to the center position by means of manual override.

The direction of rotation must be observed when connecting the power supply.

a) Travel and torque switches are ineffective if the direction of rotation is incorrect.

b) The switch-off must be carried out according to our specifications/schematics, i.e:

→ In the closing direction, switch-off is always carried out via the travel limit switch; in exceptional cases, this is also carried out via torque switches (e.g. for highly abrasive media).

→ In the opening direction, switch-off only takes place via the travel limit switch, while the existing torque switch serves as an overload protection.

5.4 Mounting instructions

Prior to the mounting of the valve:

- > Flush the pipeline to remove all traces of soiling, welding residues, etc.
- > Remove the transport packaging and check whether the flange connections are without damage and clean.
- > Check whether the flange clearance is in accordance with the face-to-face dimension of the valve.
- > Before mounting the valve, the flanges are to be sufficiently spread using a suitable tool.
- > The valve must **be** completely closed.
- > In order to intercept the valve between the flanges during the mounting process, we recommend (depending on the mounting position) to insert the lower flange screws without tightening them.
- > Insert the valve and the seals between the flanges.
- > Insert the flange screws.
- > Remove the spreader and hand-tighten the screws.
- > Check whether the valve, the seals and the counter-flanges are in true alignment.
- > Tighten the flange screws crosswise using the stipulated torque. The tightening torque depends on the seals chosen.
- > If no specifications are given, the following standard values can be used:

Flange screw	M16	M20	M24	M27	M30	M33	M36	M39	M42	M45
Torque in Nm	85	165	285	425	570	780	980	1250	1550	1950

For threaded or threaded blind holes, flange screws must be installed according to the following figure:

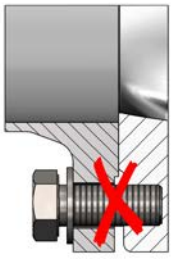

Figure 1

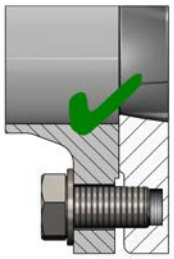

Figure 2

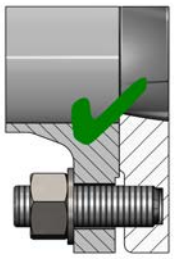

Figure 3

Figure 1: Incorrect assembly

Screws must not touch the bottom of the blind hole.

Figure 2: Correct assembly

Figure 3: Correct assembly

The threaded bolt must be screwed in before the nut can be tightened.

Knife gate valves in AT200 design are provided with through holes in the flange drilling pattern.

Through holes are to be mounted according to the following figure:

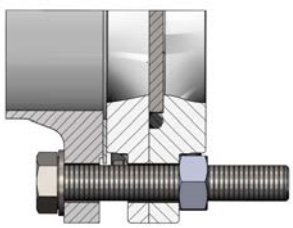

Installation as end gate valve

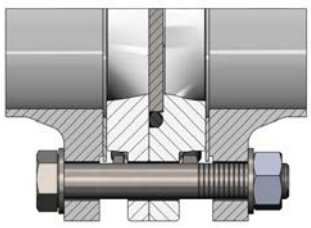

Installation between 2 flanges

Valves of the AT series can be used as wafer type knife gate valves or end gate valves.



⚠ DANGER

Installation as end fitting

Within the scope of PED 2014/68/EU, the valve must not be used as the last shut-off of a pressurised pipeline before the atmosphere.

Outside the scope of PED 2014/68/EU, the manufacturer must be consulted if the valve is to be used as the last shut-off of a pressurised pipeline before the atmosphere.

In the case of a valve that is used as the last shut-off before the atmosphere, the free connection must be secured with a blank flange so that no leakage to the outside can occur.

If a pipeline flange is removed, it must be ensured that no damage can be caused by escaping medium even if there is a leak in the sealing system.

5.5 Impermissible operation

In order to operate the valve as efficiently as possible and to avoid malfunctions:

- > Valves must not be used to support the pipeline nor as a step-up. This includes the differ-ent kinds of operation like hand levers, gear operators, actuators, feedback and control sys-tems.
- > Do not exceed the pressure and temperature range specified on the valve or specified in the technical data (PS / TS).
- > Never operate the valve without actuating devices and/or locking of the shut-off-element.
- > Avoid all foreign particles on the sealing surfaces.
- > Do not operate the valve in the cavitation area.
- > The throttling and control range in an intermediate position with an opening of 0 to 20% is not permissible in the long run, as the flow rate will be excessive high and the valve will be damaged.

6 Operation



⚠ CAUTION

Pipelines are under pressure

a) Before removing the valve make sure that the pipe section is depressurised and evacuated.

⇨ In case of toxic, caustic and other outgasing media the pipe section must also be ventilated.



⚠ DANGER

There is an acute danger to life when opening a pressurized valve!

Opening of screw connenctions, limit switches, manual overrides or auxiliary equipment when the valve is under pressure may result in eruption of the fluid and damage to the valve.



NOTICE

Opening a (pressurized) valve

Since the operator of the valve is responsible for a safety rating, it is important to observe and comply with all local and company safety regulations. In addition, in order to ensure safe working on a valve, at least all safety precautions listed below must be taken:

a) Make sure that the pipe section into which the valve has been integrated is depressurised and drained.

b) Let the valve and the flow medium cool down. If dangerous substances have flowed through the relevant pipe section, it must be additionally rinsed and aerated.

c) Remove attached actuators before removing the valve or secure them against unauthorized use and accidental operation.



⚠ WARNING

Hazardous media

Work on parts in contact with hazardous media may only be carried out with appropriate protective equipment.



NOTICE

Inspection

In the case of dangerous fluids, the tightness must be checked regularly, especially against the atmosphere. If there are signs of leakage, these must be remedied immediately by resealing.



NOTICE

Usability of the valve

Valves that regularly remain in one position must be operated at regular intervals to ensure their mobility.

The valve may only be operated by trained persons who know the operating instructions, understand them and can work in accordance with.

7 Maintenance and repair



⚠ WARNING

Hazardous media

Work on parts in contact with hazardous media may only be carried out with appropriate protective equipment.



⚠ CAUTION

Pipelines are under pressure

a) Before removing the valve make sure that the pipe section is depressurised and evacuated.

⇨ In case of toxic, caustic and other outgasing media the pipe section must also be ventilated.



NOTICE

Qualified persons

Work on the valve may only be carried out by qualified and authorised persons.

7.1 Maintenance



⚠ DANGER

There is an acute danger to life when opening a pressurized valve!

Opening of screw connenctions, limit switches, manual overrides or auxiliary equipment when the valve is under pressure may result in eruption of the fluid and damage to the valve.

The valves of GEFA Processtechnik GmbH are as far as possible maintenance-free. However, for operational safety reasons, all valves should nevertheless be checked regularly, for example by assessing the external condition and their accessories. Valves should generally be operated regularly in order not to impair the proper operation of all moving parts due to excessive downtimes. Maintenance intervals are to be determined by the operator according to the conditions of use.

Resealing

If the valve is stored for a longer period of time and in case of larger temperature fluctuations, the sealing material of the narrow side seal can shrink or air pockets in the sealing material can become free and thus lead to a slight leakage at the plate narrow side. If a leak is detected at the cross seal during the pressure test or after resealing (in accordance with the installation instructions for the block profile cross seal) or after a longer period of inactivity, and if this leak persists even after the valve has been operated several times, the operator can reseal the valve in its installed state with a few simple steps. During this work, however, the gate valve should not be under full operating pressure, if possible. These easily remedied leaks are not covered by the warranty.

Minor leaks

Minor leaks can be eliminated by screwing in the sealing hole screws (A). If this does not result in any significant improvement, unscrew the plug hole screws (A) and refill the sealing material (B) with the sealing tool (C) until the gate valve is tight. For gate valves sealed through the cross seal, make sure that the sealing tool is pushed through the hole provided for this purpose in the seal and sealing material is compressed between the seals. The sealing hole screws (A) must finally be screwed back in by approx. 3 thread turns.

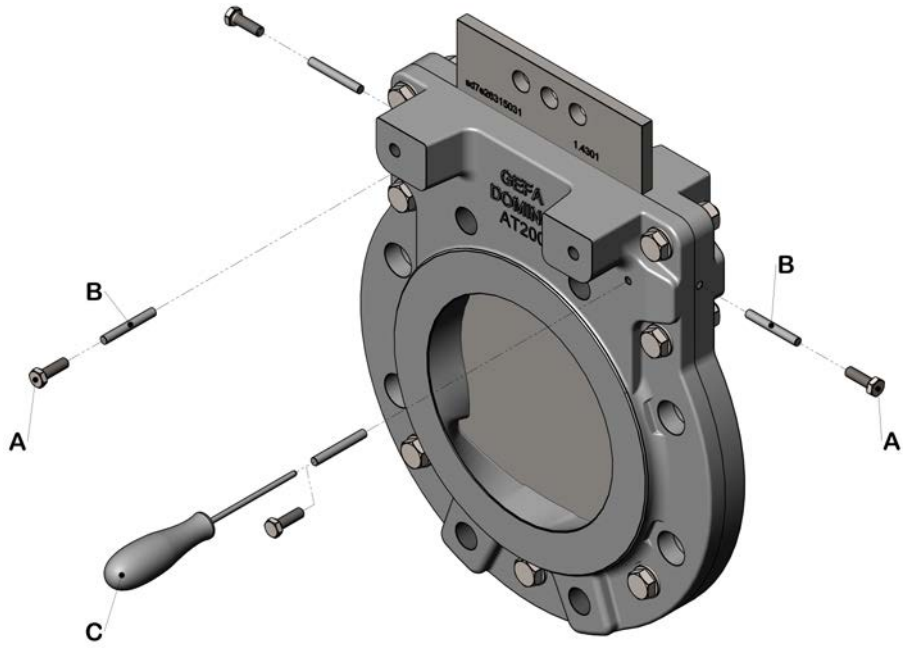

Replacing the seal

- In case of leakage in the gate valve, the seal is usually damaged or worn.
- To replace the seal, remove the gate valve from the pipeline.
- The replacement of the gate valve seal can be carried out by trained specialists according to the instructions. Repair at the manufacturer's plant can also be carried out.
- Only original spare parts may be used.

Lubrication of the gate valves with handwheel actuation

The spindle must always be well greased and free from contamination. A central lubrication point for the spindle thread is not provided in the standard design. Lubrication points on the handwheel bearing must be regreased at regular intervals depending on the operating and service conditions.

Gate valve with pneumatic or hydraulic cylinder

The piston rod should be free of any contamination. Pneumatic cylinders with damping use a self-lubricating rod seal as standard. In the event of leaks on the cylinders, all seals should generally be replaced.

Gate valve with electric actuator

The spindle must always be well greased and free from contamination. A central lubrication point for the spindle thread is not provided in the standard design. Lubrication points on the output drive of the actuator must be observed. The respective operating instructions of the actuator manufacturers are binding.

Cleaning

Depending on the application, the gate valve plate or guidance may also need to be cleaned.

In case of infrequent operation, especially of the automatically operating valves, a test run should be carried out at least every 3 months to ensure constant readiness for use and to scrape off any caking.

8 Decommissioning and disposal



⚠ CAUTION

Pipelines are under pressure

a) Before removing the valve make sure that the pipe section is depressurised and evacuated.

⇨ In case of toxic, caustic and other outgasing media the pipe section must also be ventilated.



⚠ WARNING

Hazardous media

Work on parts in contact with hazardous media may only be carried out with appropriate protective equipment.

8.1 Decommissioning

To enable safe maintenance or removal of the valve, at least all safety precautions listed here must be taken:

> Make sure that the pipe section in which the valve is located is depressurized and drained.

> If toxic, corrosive or other outgassing substances have flowed through the pipe section concerned, it must be additionally ventilated.

> Before removing the valve, dismantle the mounted actuators or secure them against external switching and inadvertent operation.

Since the operator of the valve is responsible for a safety classification, it is essential to observe and comply with all local and company standard safety precautions.

8.2 Dismantling the valve



⚠ WARNING

One-sided dismantling of a pipeline

Before a pipeline can be dismantled from one side of the valve, it must be ensured that the valve is not moved or operated in an uncontrolled manner in any situation. Escaping medium due to unintentional opening of the gate valve can have dangerous consequences for people and the environment. Likewise, wear can lead to massive injuries up to the severing of body parts or damage to parts.



⚠ WARNING

Opening of pneumatic valves / cylinders

The opening of pneumatic actuators or pneumatic cylinders, which are equipped with a closing or opening spring, is associated with increased risk. It is essential to follow the maintenance and repair instructions. Maintenance and repair instructions can be found on www.gefa.com or request them directly from us.



NOTICE

Removing of the valve

Since the operator of the valve is responsible for a safety classification, it is important to observe and comply with all local and company-standard safety precautions. In addition, in order to ensure safe working on a valve, at least all safety precautions listed below must be taken:

a) Before carrying out maintenance and repair work, make sure that all parts of the valve that may come into contact with the unit have cooled down to room temperature.

b) Check if the pipeline is depressurised and exhausted.

c) Check if pneumatic and hydraulic operating controls are depressurised.

d) Check the piping system and the pneumatic or hydraulic operating controls for residual energy (e.g. pressure pad).

e) Automatic or remotely operated valves are to be decoupled from the automatic mode or the remote control for the duration of the maintenance and repair work.

f) Work on parts in contact with hazardous media may only be carried out with suitable protective equipment.

g) Only original spare parts may be used.

To ensure safe removal of the valve, it is essential that you adhere to all safety precautions listed in this documentation.

The valve is removed by loosening the flange screws and sufficient spreading of the mating flanges.

8.3 Disposal

All valve parts must be disposed of in accordance with the disposal regulations / environmental protection regulations. Pay attention to residual adhesion and outgassing of the flow media.

9 Technical data and materials

9.1 Data sheet DN50-300 with handwheel

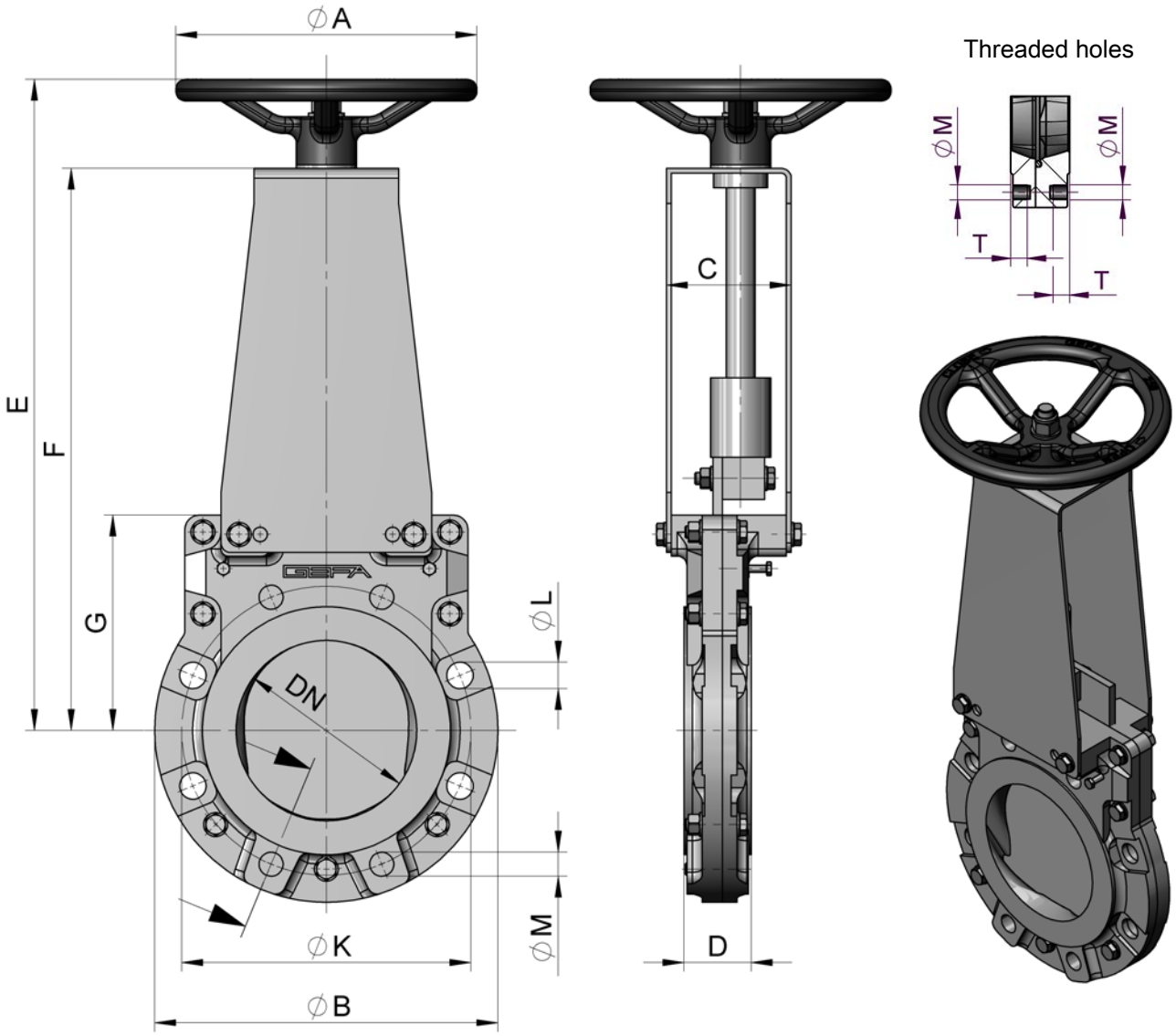

DN	NPS	ØA	ØB	C	D	E	F	G	ØK	ØL	ØM	T	kg
50	2“	150	165	91	43	320	252	110	125	-	4xM16	15	8
65	2 1/2“	150	185	91	46	325	257	115	145	-	4xM16	18	9.5
80	3“	150	200	91	46	345	278	139	160	4xØ18	4xM16	14	11.5
100	4“	200	220	96	52	418	349	152	180	4xØ18	4xM16	16	14.9
125	5“	200	250	96	56	426	357	160	210	4xØ18	4xM16	18	17.9
150	6“	250	285	104	56	541	467	179	240	4xØ22	4xM20	17	27.6
200	8“	250	340	104	60	571	497	209	295	4xØ22	4xM20	18	36.6
250	10“	300	395	141	68	751	660	257	350	6xØ22	6xM20	21	60.4
300	12“	400	445	141	78	796	700	297	400	6xØ22	6xM20	22	83.4

Maximum permissible pressure: 10 bar

Subject to changes

9.2 Data sheet DN350-500 with handwheel

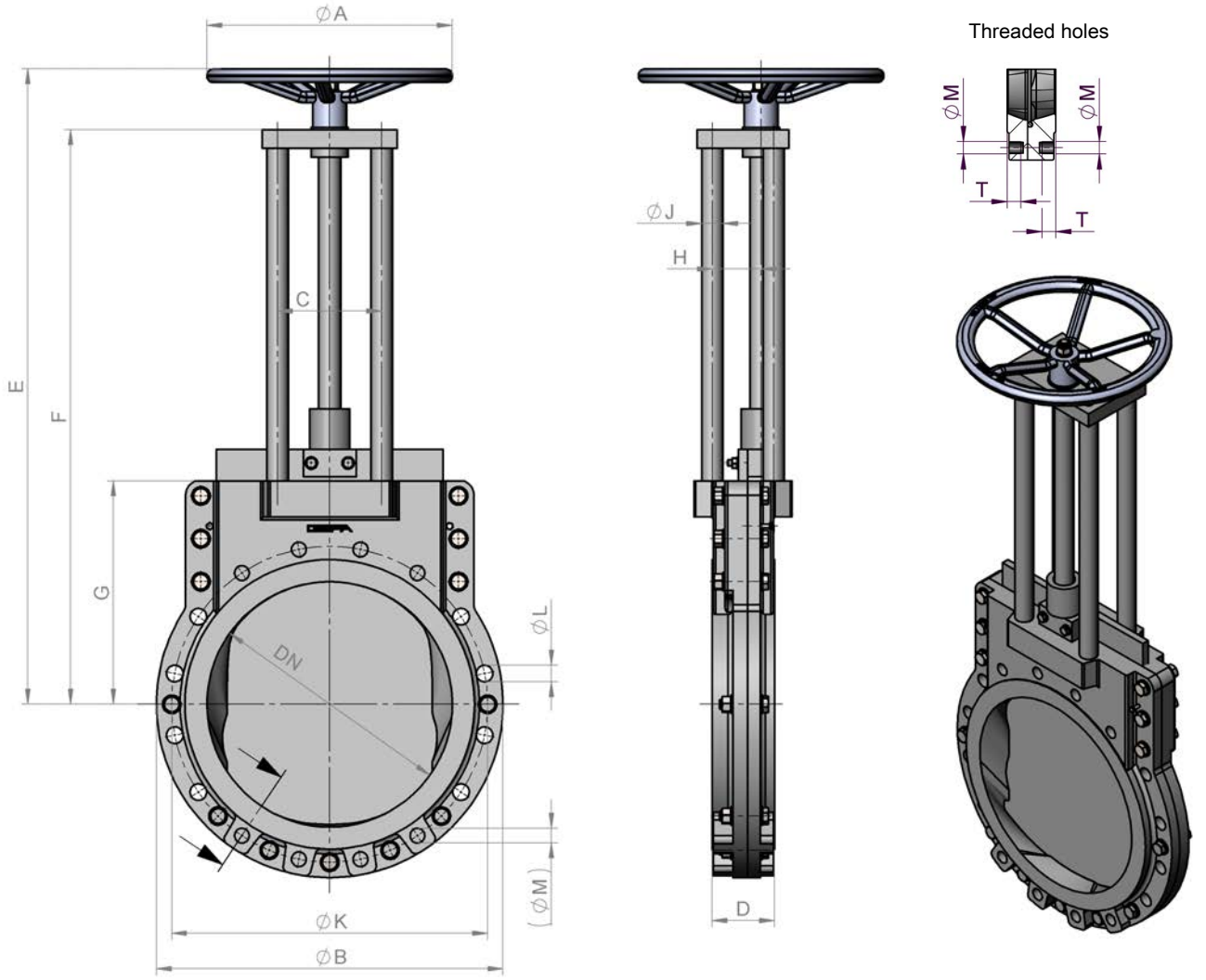

DN	NPS	P_S	ØA	ØB	C	D	E	F	G	H	ØJ	ØK	ØL	ØM	T	kg
350	14“	6	400	505	170	78	1000	901	328	80	35	460	8xØ22	8xM20	18	139
400	16”	6	400	565	170	102	1036	937	364	80	35	515	8xØ27	8xM24	26	174
450	18”	4	500	615	170	114	1204	1082	388	83	35	565	10xØ27	10xM24	26	217
500	20"	4	500	670	170	127	1235	1113	419	83	35	620	10xØ27	10xM24	26	257

P_S [bar] = maximum permissible pressure

Subject to changes

9.3 Data sheet DN50-200 with hand lever

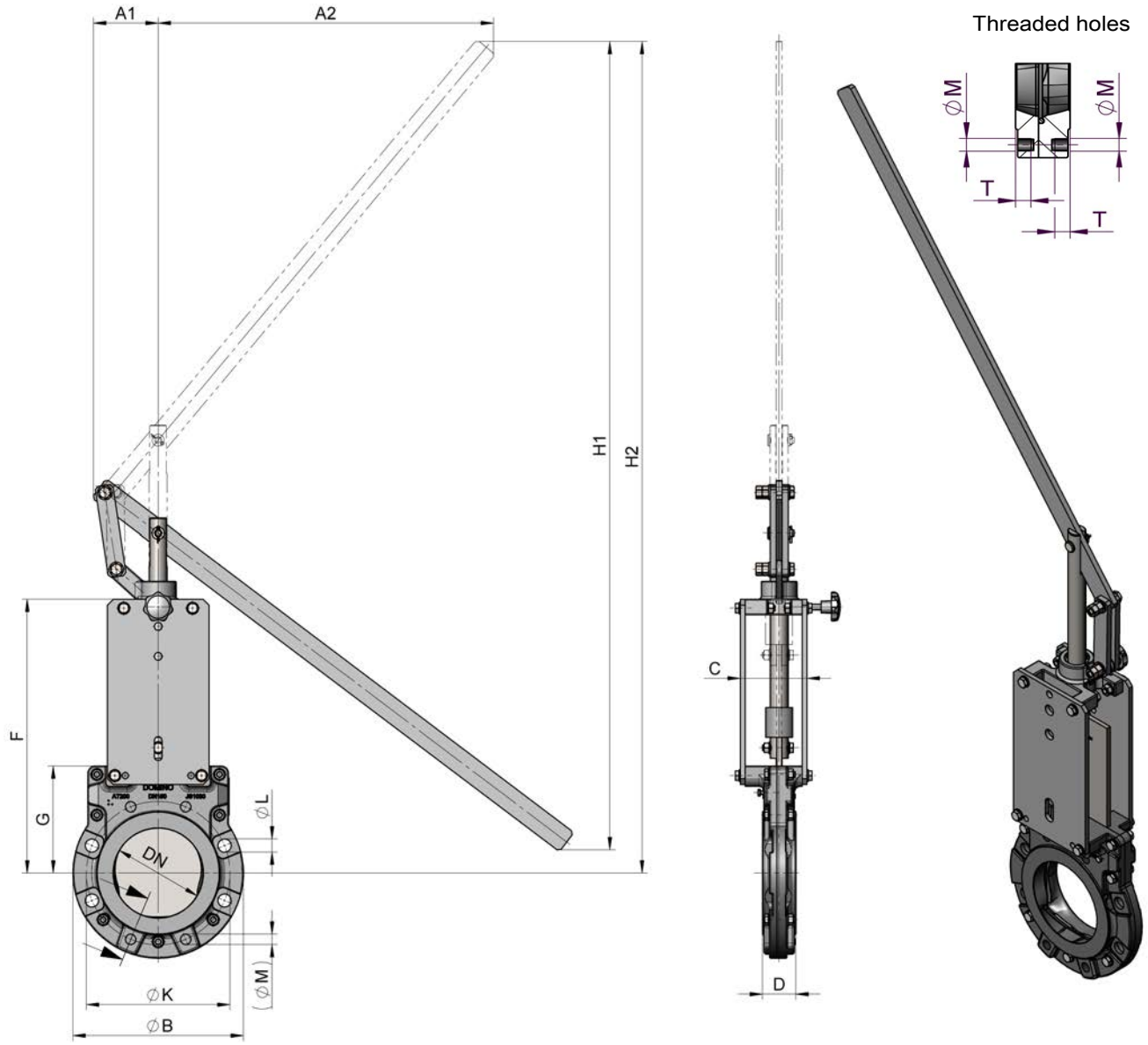

DN	NPS	A1	A2	ØB	C	D	F	G	H1	H2	ØK	ØL	ØM	T	kg
50	2“	115	425	165	91	43	252	110	285	485	125	-	4xM16	15	7.5
65	2 1/2“	115	425	185	91	46	257	115	360	560	145	-	4xM16	18	9
80	3“	115	425	200	91	46	278	139	425	655	160	4xØ18	4xM16	14	11
100	4“	120	480	220	96	52	349	152	590	810	180	4xØ18	4xM16	16	14
125	5“	120	480	250	96	56	357	160	715	944	210	4xØ18	4xM16	18	17
150	6“	110	695	285	104	56	467	179	1300	1375	240	4xØ22	4xM20	17	26
200	8“	135	850	340	104	60	497	209	1670	1660	295	4xØ22	4xM20	18	35

Maximum permissible pressure: 10 bar

Maximum permissible differential pressure during actuation: 2 bar

Subject to changes

9.4 Data sheet DN50-300 with square

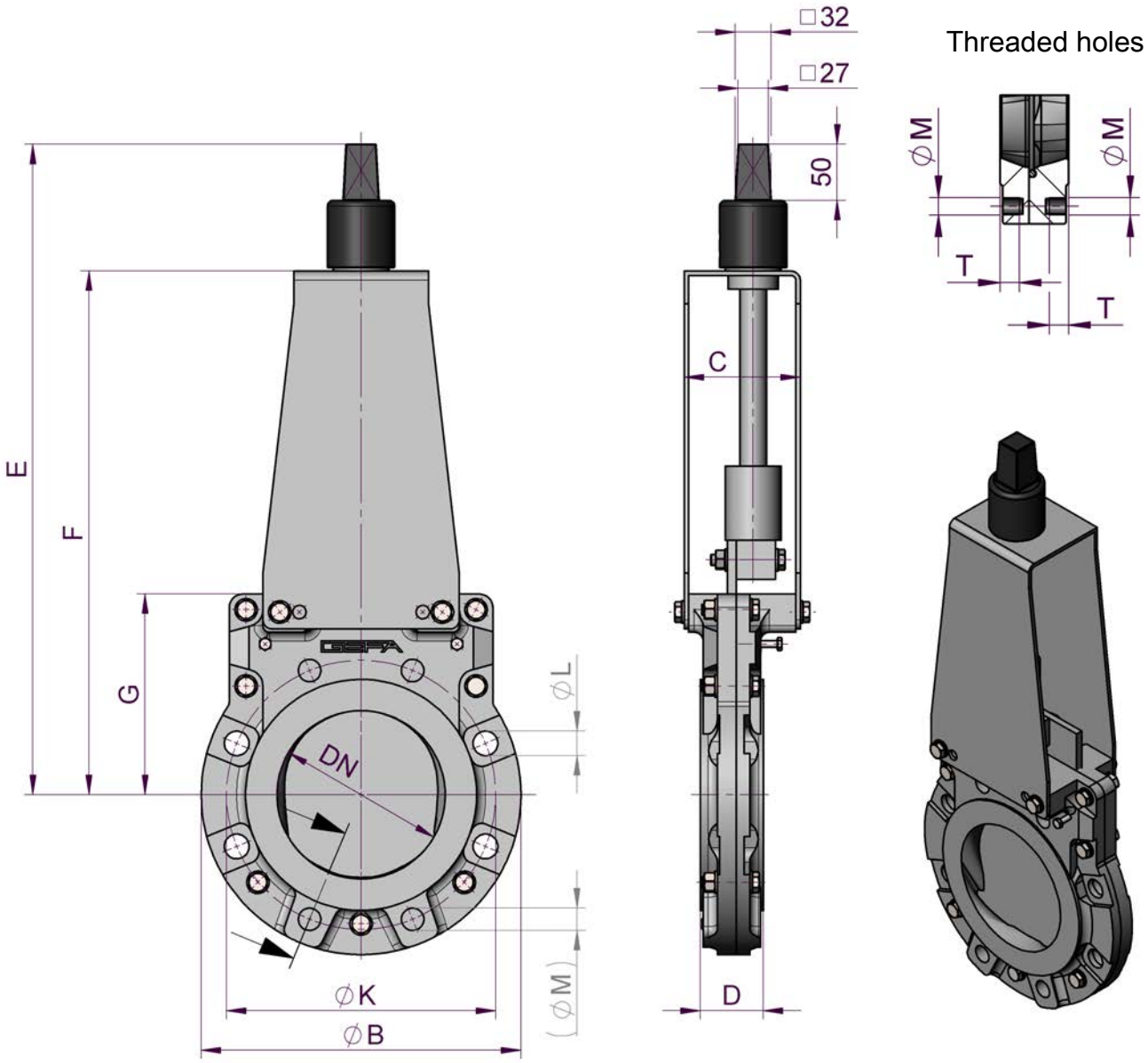

DN	NPS	ØB	C	D	E	F	G	ØK	ØL	ØM	T	kg
50	2“	165	91	43	365	252	110	125	-	4xM16	15	8.4
65	2 1/2“	185	91	46	370	257	115	145	-	4xM16	18	9.9
80	3“	200	91	46	391	278	139	160	4xØ18	4xM16	14	11.9
100	4“	220	96	52	462	349	152	180	4xØ18	4xM16	16	14.5
125	5“	250	96	56	470	357	160	210	4xØ18	4xM16	18	17.5
150	6“	285	104	56	580	467	179	240	4xØ22	4xM20	17	25.7
200	8“	340	104	60	610	497	209	295	4xØ22	4xM20	18	34.7
250	10“	395	141	68	774	660	257	350	6xØ22	6xM20	21	57
300	12“	445	141	78	814	700	297	400	6xØ22	6xM20	22	76.7

Maximum permissible pressure: 10 bar

Subject to changes

9.5 Data sheet DN350-500 with square

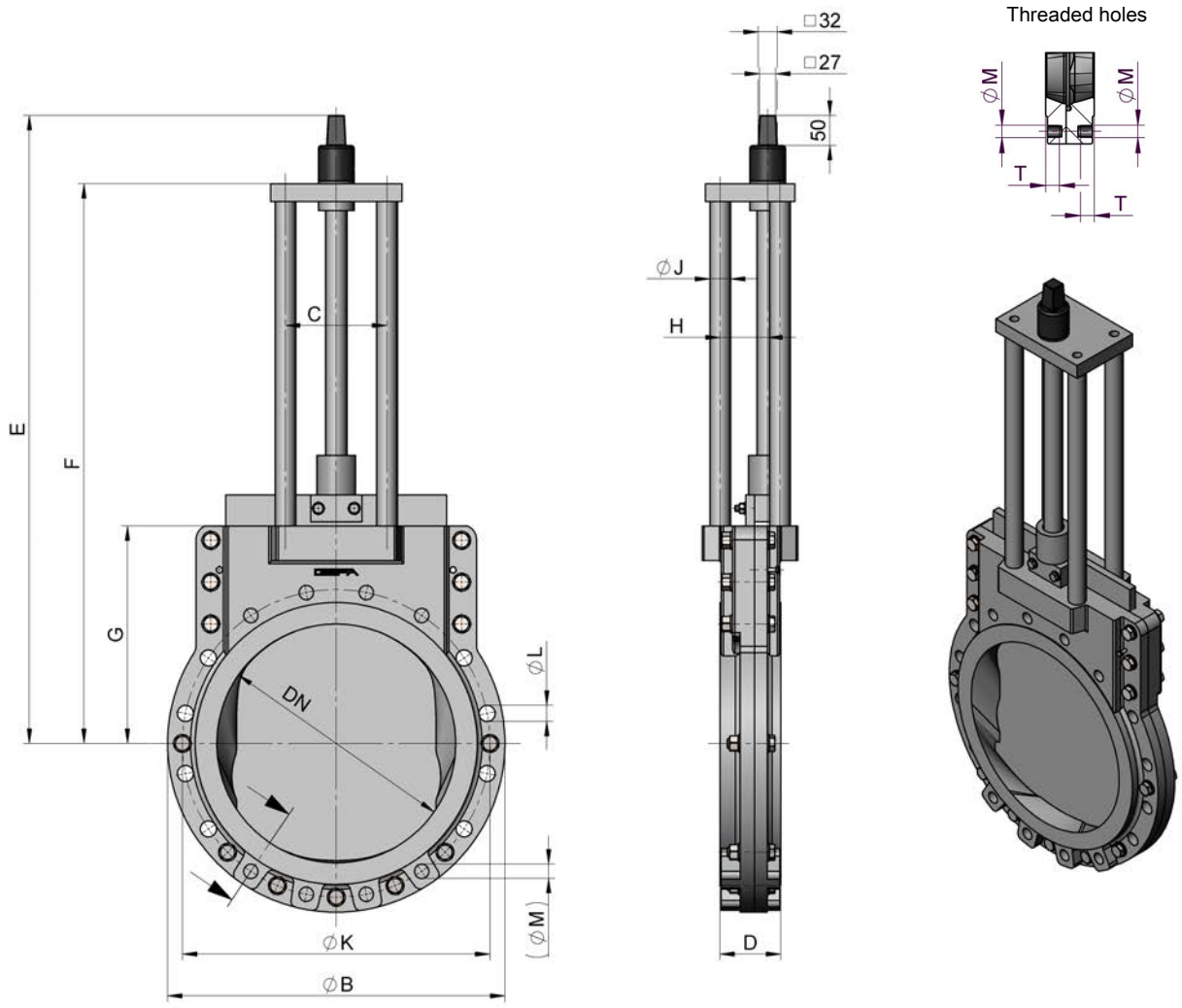

DN	NPS	P_S	ØB	C	D	E	F	G	H	ØJ	ØK	ØL	ØM	T	kg
350	14“	6	505	170	78	1015	901	328	80	35	460	8xØ22	8xM20	18	135
400	16”	6	565	170	102	1051	937	364	80	35	515	8xØ27	8xM24	26	170
450	18”	4	615	170	114	1196	1082	388	83	35	565	10xØ27	10xM24	26	210
500	20"	4	670	170	127	1227	1113	419	83	35	620	10xØ27	10xM24	26	250

P_S [bar] = maximum permissible pressure

Subject to changes

9.6 Data sheet DN500-1200 with gear

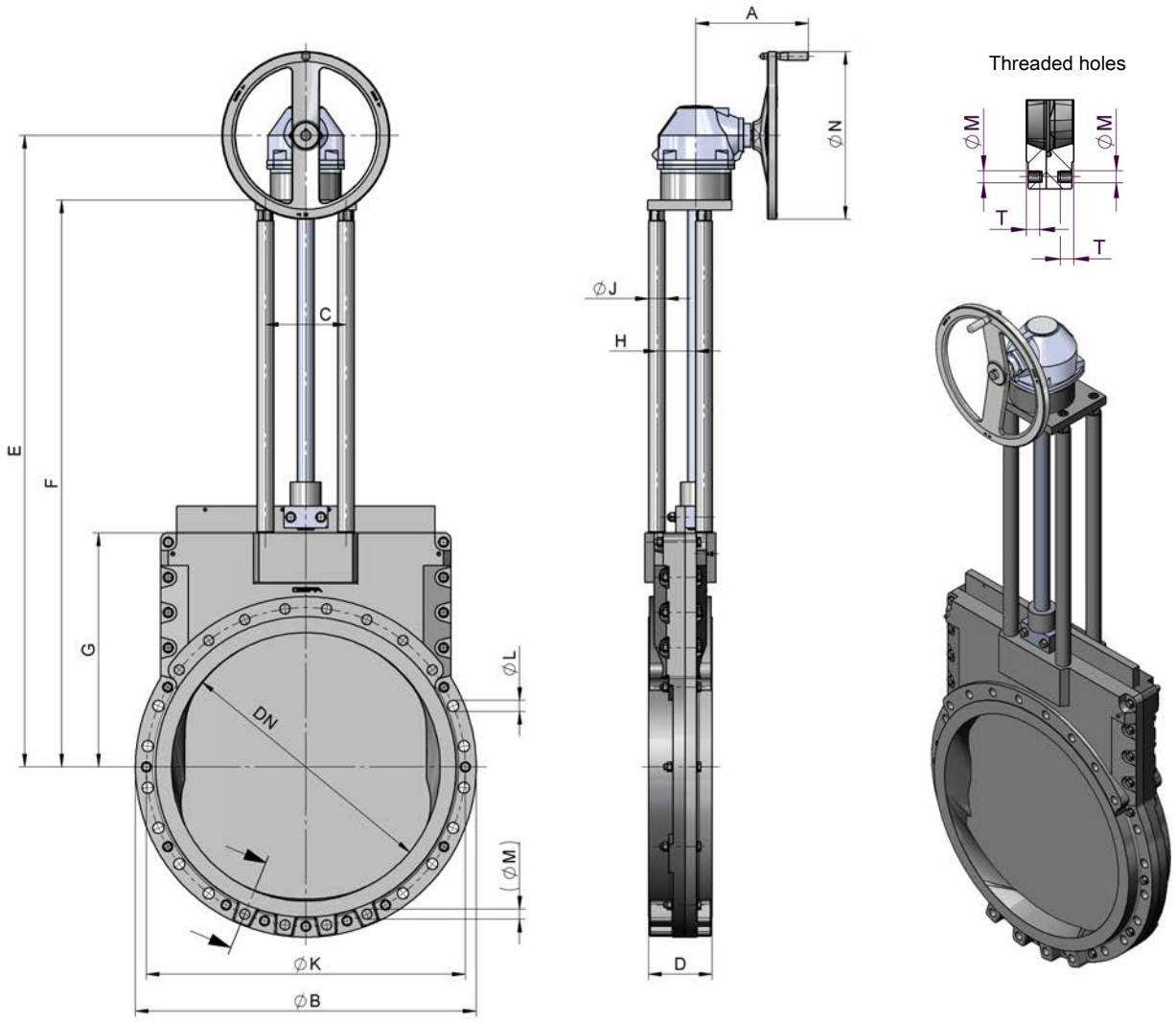

DN	NPS	Gear	P_s	A	ØB	C	D	E	F	G	H	J	ØK	ØL	ØM	ØN	T	kg
500	20“	GK 14.2	4	290	670	170	127	1278	1113	419	83	35	620	10xØ27	10xM24	400	26	276
600	24“	GK 14.2	4	290	780	190	154	1438	1273	508	85	35	725	10xØ30	10xM27	400	35	400
700	28“	GK 14.6	4	290	895	220	165	1667	1502	612	110	35	840	12xØ30	12xM27	400	39	674
800	32“	GK 14.6	4	290	1015	240	190	1852	1687	697	116	50	950	12xØ33	12xM30	400	49	934
900	36“	GK 14.6	3	290	1115	240	203	2113	1948	847	124	50	1050	14xØ33	14xM30	400	43	1284
1000	40“	GK 14.6	2.5	290	1230	240	216	2270	2105	897	124	50	1160	14xØ36	14xM33	400	45	1534
1200	48“	GK 16.2	2	335	1455	300	254	2663	2470	1037	139	50	1380	16xØ39	16xM36	500	55	2232

Dimensions referred to AUMA standard actuator. Changed dimensions with different actuator type.

P_S [bar] = maximum permissible pressure

Subject to changes

9.7 Data sheet DN50-300 with pneumatic cylinder

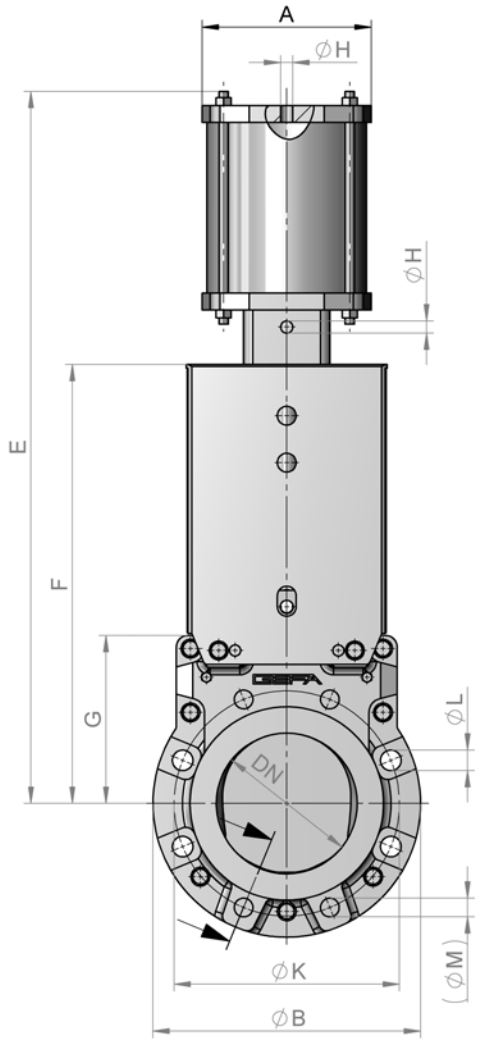

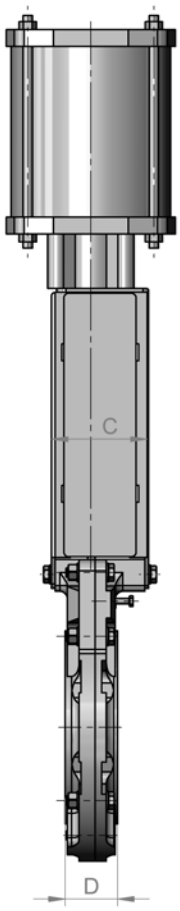

Threaded holes

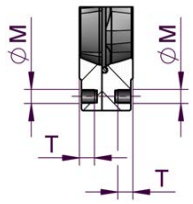

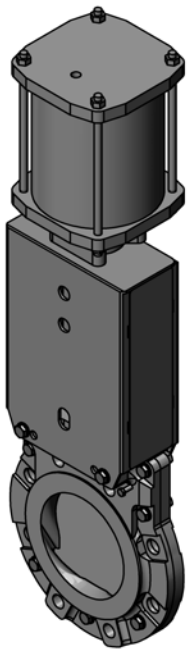

DN	NPS	P_D	Cyl.- Ø	A	ØB	C	D	E	F	G	ØH	ØK	ØL	ØM	T	kg
50	2“	10	100	Ø140	165	91	43	417	252	110	R1/4“	125	-	4xM16	15	10
65	2 1/2“	8	100	Ø140	185	91	46	439	257	115	R1/4“	145	-	4xM16	18	12
80	3“	5	100	Ø140	200	91	46	476	278	139	R1/4“	160	4xØ18	4xM16	14	14
100	4“	5	100	Ø140	220	96	52	561	349	152	R1/4“	180	4xØ18	4xM16	16	20
125	5“	4	100	Ø140	250	96	56	594	357	160	R1/4“	210	4xØ18	4xM16	18	23
150	6“	6	160	□180	285	104	56	753	467	179	R1/4“	240	4xØ22	4xM20	17	36
200	8“	6	200	□220	340	104	60	857	497	209	R1/4“	295	4xØ22	4xM20	18	50
250	10“	7	250	□270	395	141	68	1100	660	257	R1/4“	350	6xØ22	6xM20	21	88
300	12“	5	250	□270	445	141	78	1190	700	297	R1/4“	400	6xØ22	6xM20	22	110

P_D [bar] = Maximum permissible differential pressure during actuation

Control pressure for pneumatic cylinder:6 bar

Maximum permissible pressure: 10 bar

Subject to changes

9.8 Data sheet DN350-700 with pneumatic cylinder

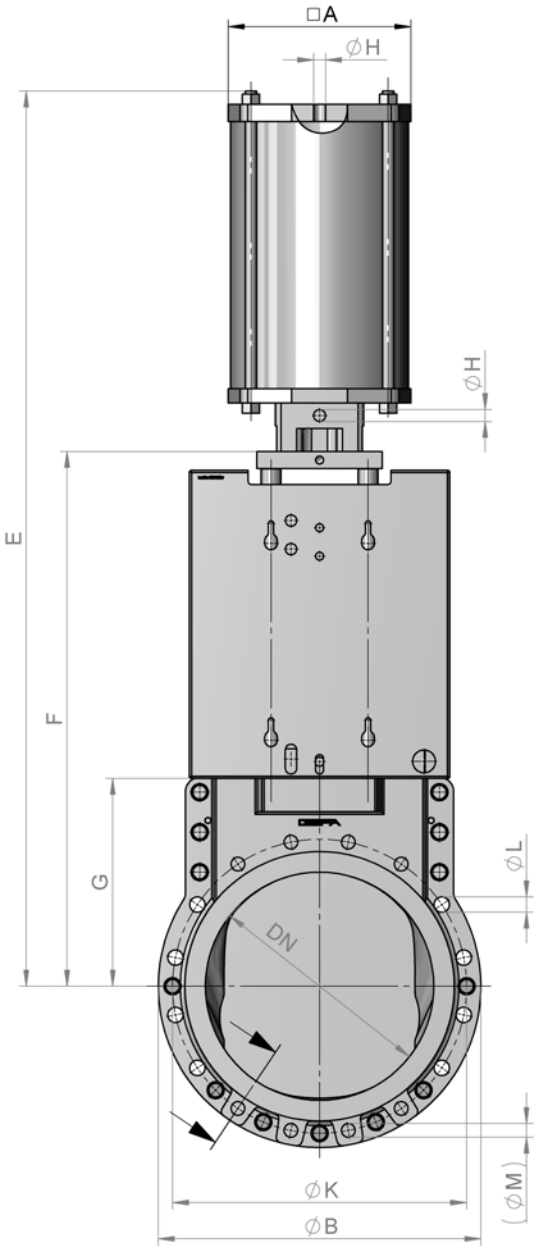

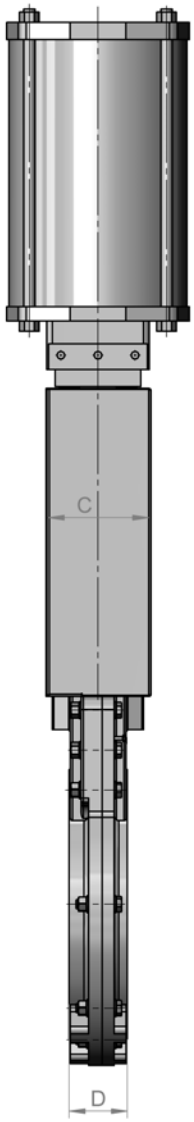

Threaded holes

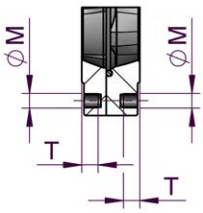

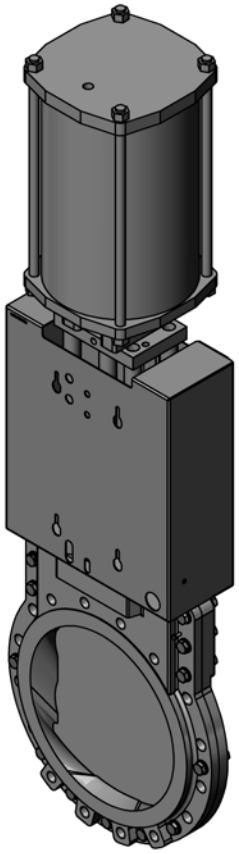

DN	NPS	P_D	P_S	Cyl.- Ø	□A	ØB	C	D	E	F	G	ØH	ØK	ØL	ØM	T	kg
350	14“	5	6	250	270	505	184	78	1448	901	328	R1/4“	460	8xØ22	8xM20	18	148
400	16”	4	6	250	270	565	184	102	1534	937	364	R1/4“	515	8xØ27	8xM24	26	190
450	18”	3	4	300	320	615	184	114	1745	1082	388	R1/2“	565	10xØ27	10xM24	26	245
500	20"	2.5	4	300	320	670	184	127	1842	1113	419	R1/2“	620	10xØ27	10xM24	26	290
600	24“	1	4	300	320	780	184	154	2093	1273	508	R1/2“	725	10xØ30	10xM27	35	425
700	28“	1	4	300	320	895	214	165	2412	1502	612	R1/2“	840	12xØ30	12xM27	39	695

P_D [bar] = Maximum permissible differential pressure during actuation

Control pressure for pneumatic cylinder:6 bar

P_S [bar] = maximum permissible pressure

Subject to changes

9.9 Data sheet DN50-200 with spring-return pneumatic cylinder

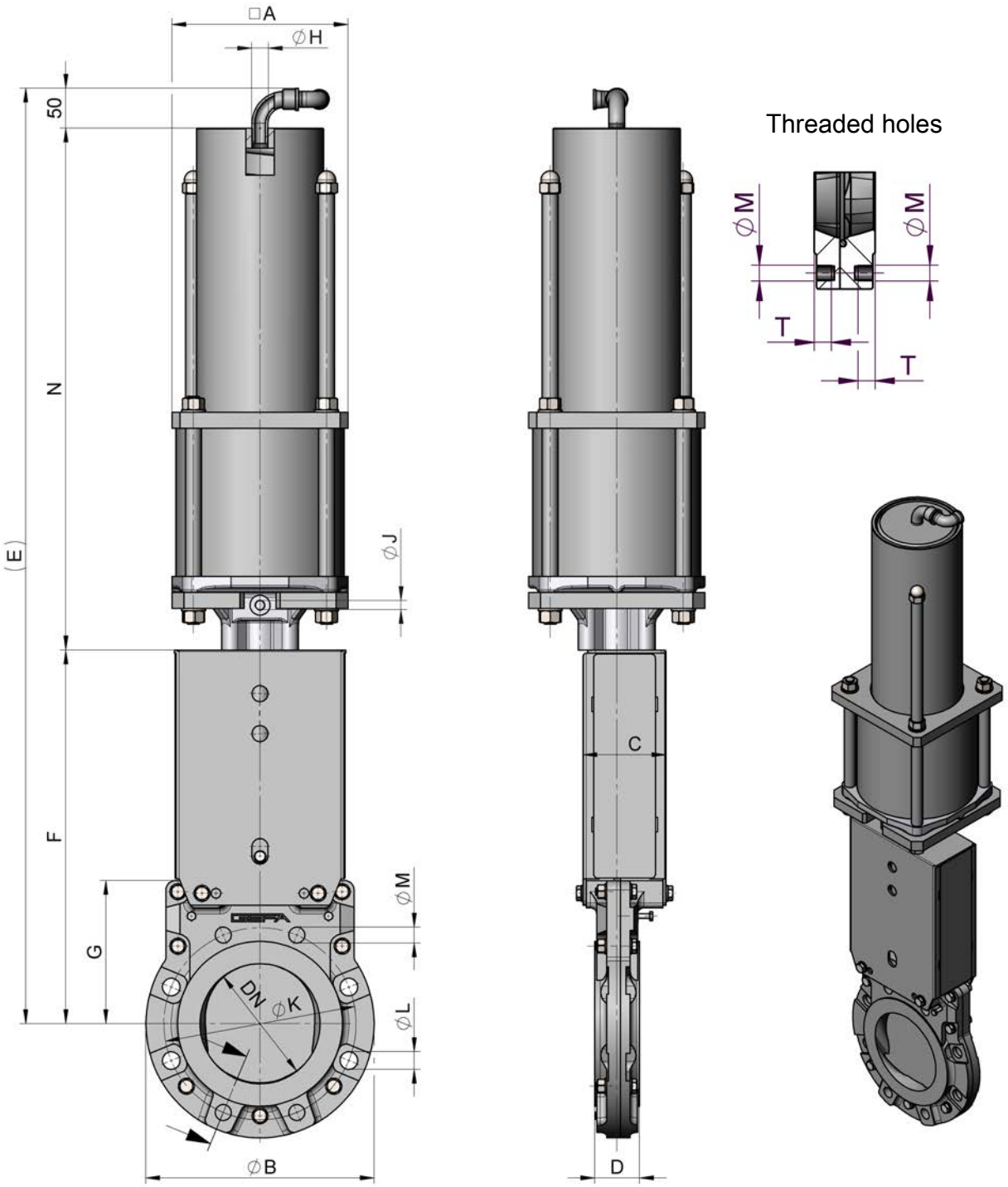

DN	NPS	P_D	Cyl.- Ø	□A	B	C	D	E	F	G	ØH	ØJ	ØK	ØL	ØM	N	T	kg
50	2“	3	160	180	165	91	43	824	252	110	G1/2“	G1/4“	125	-	4xM16	522	15	33
80	3“	3	160	180	200	91	46	878	278	139	G1/2“	G1/4“	160	4xØ18	4xM16	550	14	37
100	4“	3	160	180	220	96	52	971	349	152	G1/2“	G1/4“	180	4xØ18	4xM16	572	16	44
125	5“	2	160	180	250	96	56	1004	357	160	G1/2“	G1/4“	210	4xØ18	4xM16	597	18	47
150	6“	3	200	220	285	104	56	1169	467	179	G1/2“	G1/4“	240	4xØ22	4xM20	652	18	72
200	8“	2	200	220	340	104	60	1246	497	209	G1/2“	G1/4“	295	4xØ22	4xM20	699	18	84

P_D [bar] = Maximum permissible differential pressure during actuation

Control pressure for pneumatic cylinder:6 bar

Maximum permissible pressure: 10 bar

Subject to changes

9.10 Data sheet DN50-300 with electric actuator

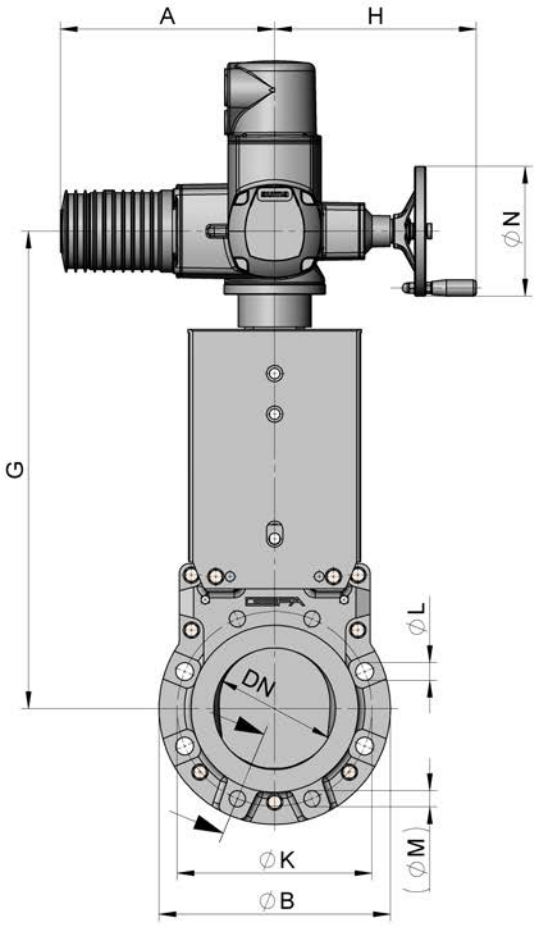

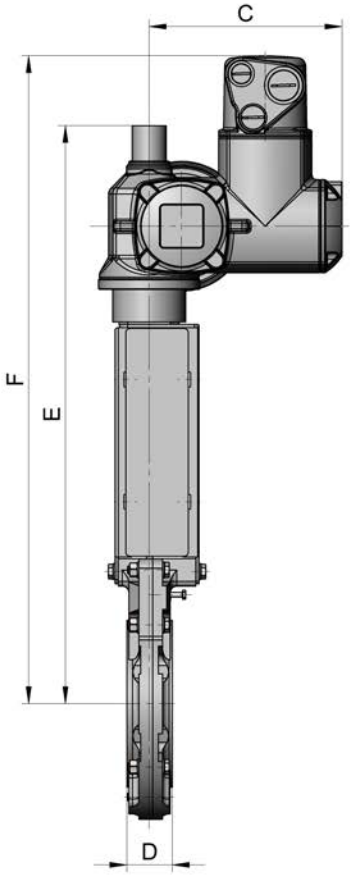

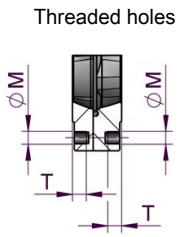

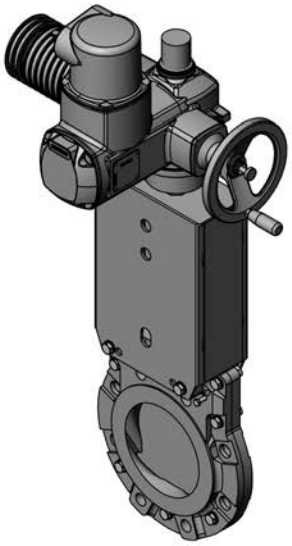

DN	NPS	Actu-ator	P_D	A	ØB	C	D	E	F	G	H	ØK	ØL	ØM	T	ØN	kg
50	2“	SA 07.6	10	265	165	238	43	452	580	370	249	125	-	4xM16	15	160	30
65	2 1/2“	SA 07.6	10	265	185	238	46	457	585	375	249	145	-	4xM16	18	160	32
80	3“	SA 07.6	10	265	200	238	46	478	606	396	249	160	4xØ18	4xM16	14	160	34
100	4“	SA 07.6	10	265	220	238	52	549	677	467	249	180	4xØ18	4xM16	16	160	38
125	5“	SA 07.6	10	265	250	238	56	558	685	475	249	210	4xØ18	4xM16	18	160	41
150	6“	SA 07.6	6	265	285	238	56	667	795	585	249	240	4xØ22	4xM20	17	160	51
200	8“	SA 07.6	6	265	340	238	60	797	825	615	249	295	4xØ22	4xM20	18	160	60
250	10“	SA 07.6	2.5	265	395	238	68	1010	988	778	249	350	6xØ22	6xM20	21	160	87
250	10“	SA 10.2	6	283	395	248	68	980	1000	790	254	350	6xØ22	6xM20	21	200	90
300	12“	SA 07.6	2.5	265	445	238	78	1100	1028	818	249	400	6xØ22	6xM20	22	160	108
300	12“	SA 10.2	6	283	445	248	78	1070	1040	830	254	400	6xØ22	6xM20	22	200	111

Dimensions referred to AUMA standard actuator. Changed dimensions with different actuator type.

P_D [bar] = Maximum permissible differential pressure during actuation

Maximum permissible pressure: 10 bar

Subject to changes

9.11 Data sheet DN350-1200 with electric actuator

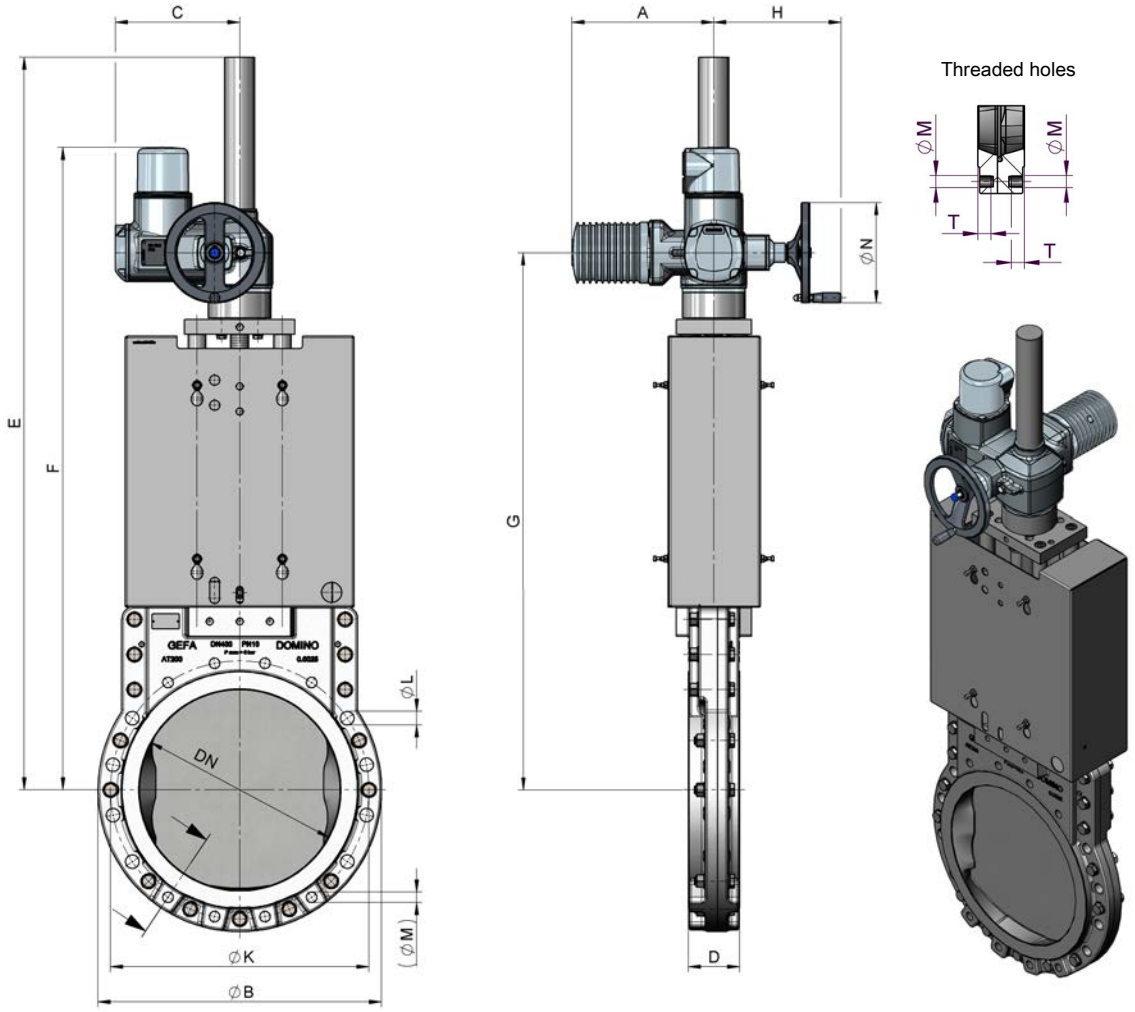

DN	NPS	Actu-ator	P_S	A	ØB	C	D	E	F	G	H	ØK	ØL	ØM	T	ØN	kg
350	14“	SA 10.2	6	283	505	248	78	1374	1244	1034	254	460	8xØ22	8xM20	18	200	165
400	16“	SA 10.2	6	283	565	248	102	1460	1280	1070	254	515	8xØ27	8xM24	26	200	200
450	18“	SA 10.2	4	283	615	248	114	1655	1425	1215	254	565	10xØ27	10xM24	26	200	240
500	20“	SA 14.2	4	389	670	286	127	1724	1494	1268	336	620	10xØ27	10xM24	26	315	310
600	24“	SA 14.2	4	389	780	286	154	1984	1654	1428	336	725	10xØ30	10xM27	35	315	440
700	28“	SA 14.6	4	389	895	286	165	2313	1883	1657	339	840	12xØ30	12xM27	39	400	700
800	32“	SA 14.6	4	389	1015	286	190	2598	2068	1842	339	950	12xØ33	12xM30	49	400	960
900	36“	SA 14.6	3	389	1115	286	203	2959	2329	2103	339	1050	14xØ33	14xM30	43	400	1314
1000	40“	SA 14.6	2.5	398	1230	286	216	3216	2486	2260	339	1160	14xØ36	14xM33	45	400	1564
1200	48“	SA 16.2	2	430	1455	303	254	3785	2890	2660	365	1380	16xØ39	16xM36	55	500	2300

Dimensions referred to AUMA standard actuator. Changed dimensions with different actuator type.

P_S [bar] = maximum permissible pressure

Subject to changes

9.12 Data sheet DN50-300 with hydraulic cylinder

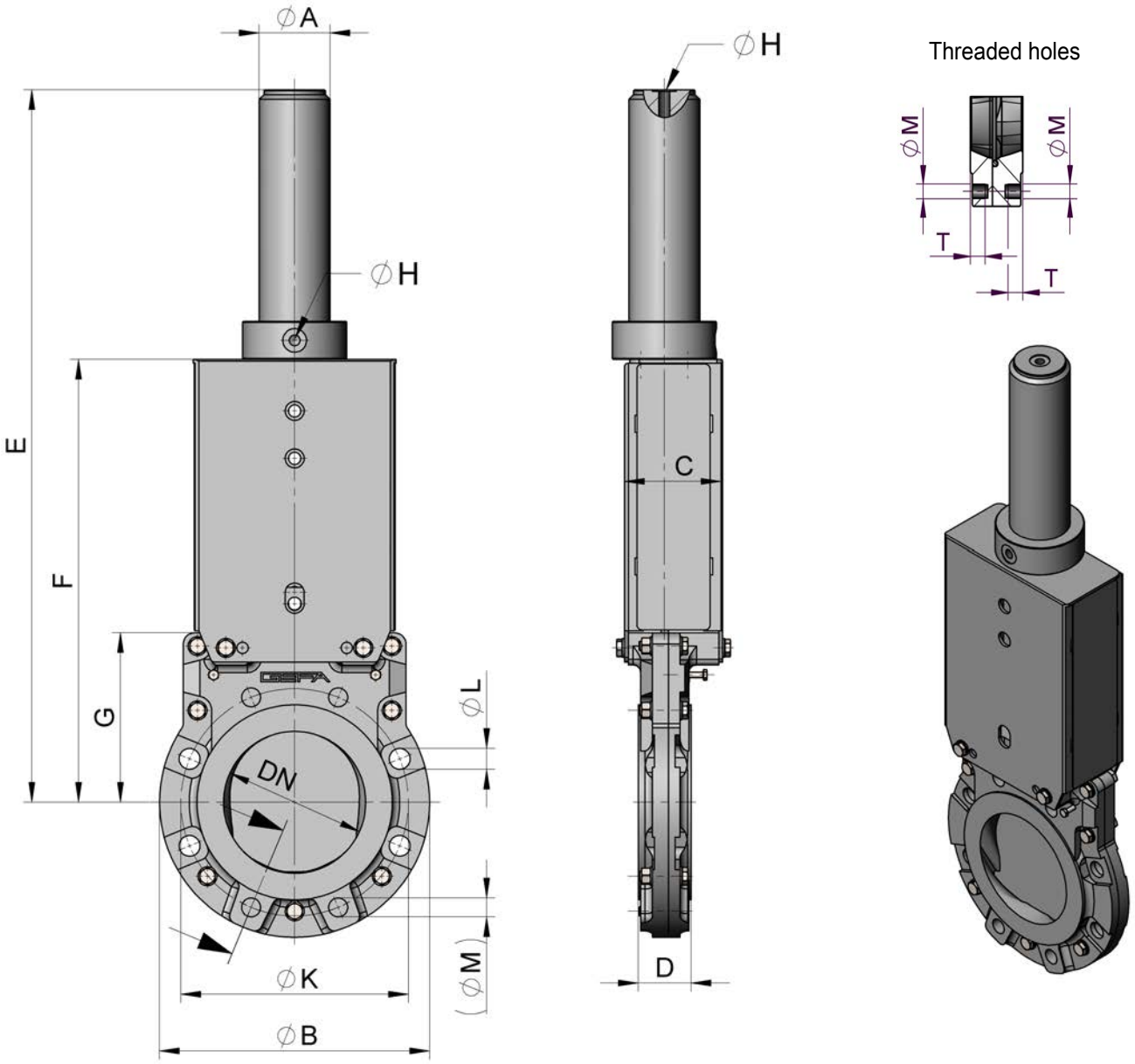

DN	NPS	Zyl.Ø	ØA	ØB	C	D	E	F	G	ØH	ØK	ØL	ØM	T	kg
50	2“	32	42	165	91	43	415	252	110	G1/4“	125	-	4xM16	15	14
65	2 1/2“	32	42	185	91	46	450	257	115	G1/4“	145	-	4xM16	18	17
80	3“	32	42	200	91	46	501	278	139	G1/4“	160	4xØ18	4xM16	14	19
100	4“	32	42	220	96	52	563	349	152	G1/4“	180	4xØ18	4xM16	16	23
125	5“	32	42	250	96	56	647	357	160	G1/4“	210	4xØ18	4xM16	18	31
150	6“	50	60	285	104	56	750	467	179	G1/4“	240	4xØ22	4xM20	17	42
200	8“	50	60	340	104	60	870	497	209	G1/4“	295	4xØ22	4xM20	18	53
250	10“	63	75	395	141	68	1033	660	257	G1/4“	350	6xØ22	6xM20	21	77
300	12“	63	75	445	141	78	1157	700	297	G1/4“	400	6xØ22	6xM20	22	109

Control pressure for hydraulic cylinder: 120 bar

Maximum permissible pressure: 10 bar

Subject to changes

9.13 Data sheet DN350-1200 with hydraulic cylinder

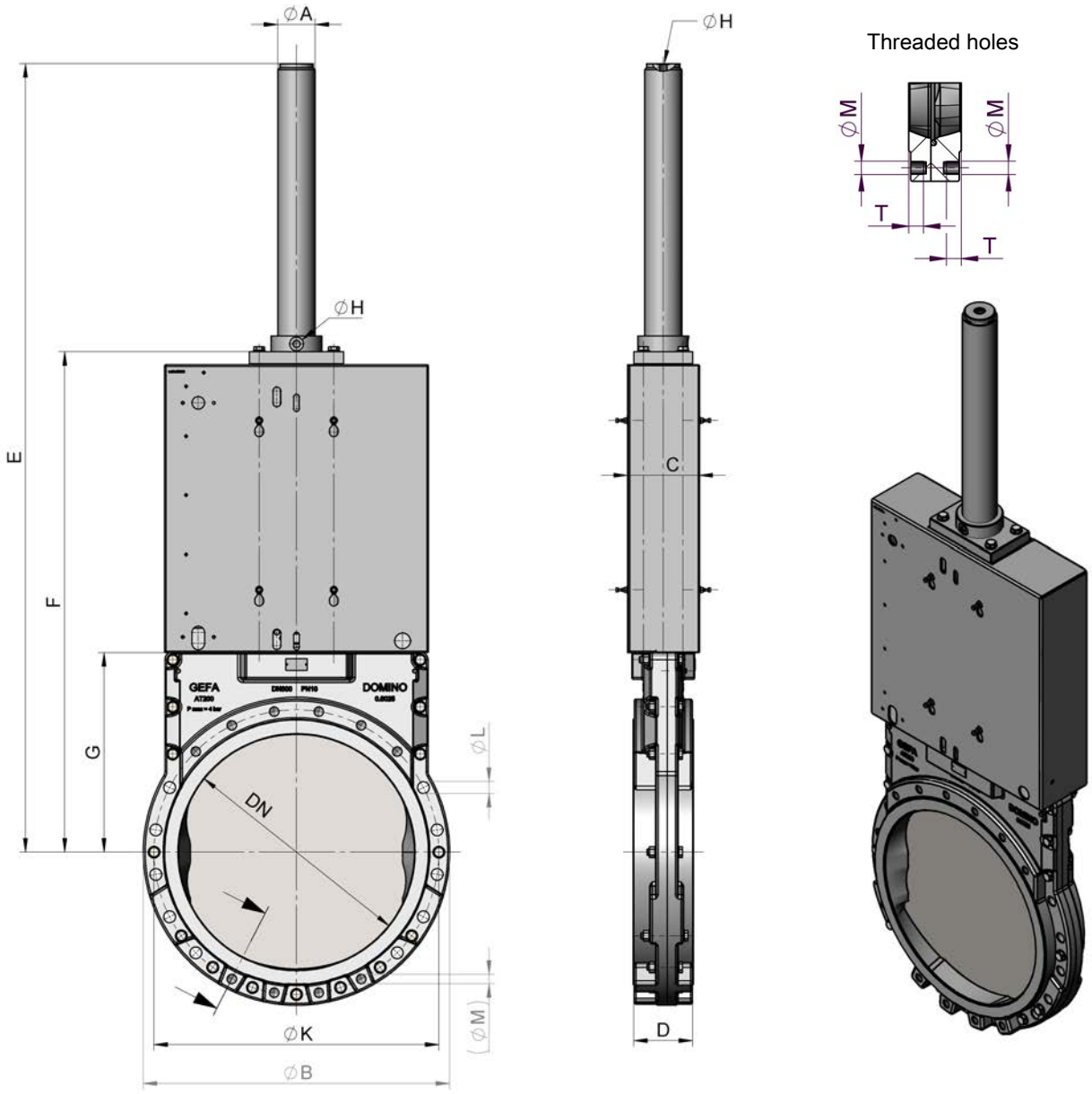

DN	NPS	P_S	Zyl.Ø.	ØA	ØB	C	D	E	F	G	ØH	ØK	ØL	ØM	T	kg
350	14“	6,0	63	75	505	184	78	1405	901	328	G1/4“	460	8xØ22	8xM20	18	154
400	16“	6,0	80	95	565	184	102	1497	937	364	G1/4“	515	8xØ27	8xM24	26	195
450	18“	4,0	80	95	615	184	114	1691	1082	388	G1/4“	565	10xØ27	10xM24	26	235
500	20“	4,0	80	95	670	184	127	1772	1113	419	G1/4“	620	10xØ27	10xM24	26	281
600	24“	4,0	100	120	780	184	154	2065	1273	508	G1/4“	725	10xØ30	10xM27	35	461
700	28“	4,0	100	120	895	214	165	2394	1502	612	G1/4“	840	12xØ30	12xM27	39	735
800	32“	4,0	125	155	1015	239	190	2679	1687	697	G1/4“	950	12xØ33	12xM30	49	743
900	36“	3,0	125	155	1115	237	203	3035	1948	847	G1/4“	1050	14xØ33	14xM30	43	1529
1000	40“	2,5	125	155	1230	239	216	3292	2105	897	G1/4“	1160	14xØ36	14xM33	45	1807
1200	48“	2,0	125	155	1455	259	254	3862	2470	1037	G1/4“	1380	16xØ39	14xM36	55	2554

Control pressure for hydraulic cylinder: 120 bar

P_S [bar] = maximum permissible pressure

Subject to changes

9.14 Data sheet DN50-400 with deflection cone

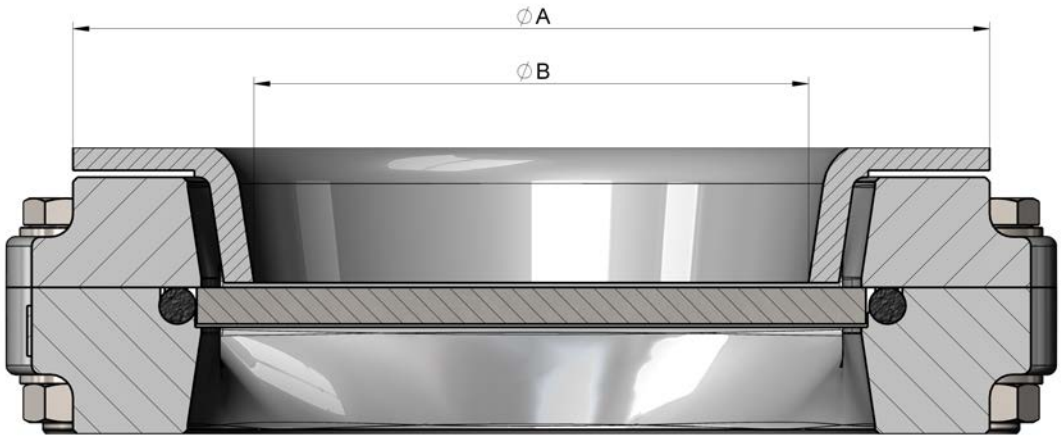

DN	ØA	ØB
100	140	67
150	200	121
200	250	164
400	460	289

Subject to changes

9.15 Materials Gate valve AT

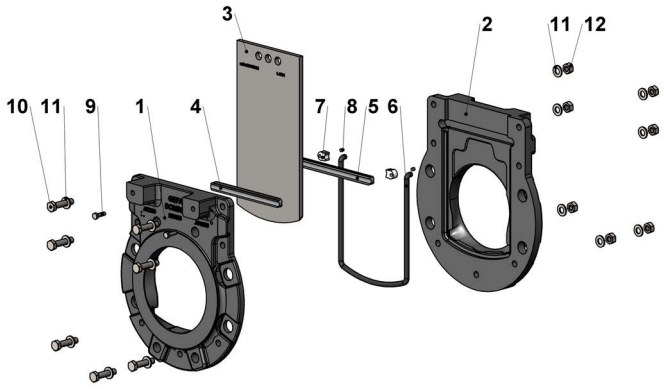

Part no.	Designation	Material SD. 2263 B
1	Front body	Grey cast iron EN-GJL-250 EKB coated
2	Rear body	Grey cast iron EN-GJL-250 EKB coated
3*	Gate valve plate	1.4301
4*	Compact cross seal	NBR
5*	Compact cross seal	NBR
6*	Round cord	NBR
7*	Filling corner profile	NBR
8*	Round kneading seal	Kempadit
9	Hexagon screw	A2-70
10	Hexagon screw	A2-70
11	Disc	A2
12	Hexagon nut	A2

*= Wear parts

Standard materials

Part no.	Designation	Material ID				
1+2	Body	22	23	44	66=1.4408	
3	Gate valve plate	63	66=1.4571	35		
4	Round cord	B	E	T	V	K
5+6	Compact cross seal	B	E	T	V	

Explanation material index

22	23	35	44	63	EKB
EN-GJL-250 EKB coated	EN-GJS-400-15 EKB coated	1.4571 chemically nickel-plated	1.0619 EKB coated	1.4301	Epoxy powder

B	E	T	V	K
NBR	EPDM	PTFE	FPM (Viton)	Ceramic fiber

Other materials optionally available

Subject to changes

10 How to proceed in case of malfunctions



⚠ DANGER

When eliminating malfunctions, all safety-relevant information in these operating instructions must be observed.

Type of fault	Possible cause	Measure
Leakage at plate exit from body	Cross seal leaking	Reseal the cross seal according to instructions
	Cross seal defective	Replace cross seal according to instructions
Leakage in the bore of the valve	Gate valve plate not completely closed; parts jammed between gate valve plate and body	**Manually operated gate valves:** Slightly open gate valve and repeat closing procedure Remove jammed parts
		Pneumatically and oil-hydraulically operated gate valves: Slightly open gate valve and repeat closing procedure Check and, if necessary, readjust the connection or the stroke Remove jammed parts
	Jammed parts between spindle nut and body resp. connection and body	**Electrically operated gate valves:** Slightly open gate valve and repeat closing procedure Check and, if necessary, readjust the travel-dependent limit switches (adjustment work according to the manufacturer's instructions) Remove jammed parts
	Seal in bore defective	Remove gate valve, replace seals according to instructions
Leakage between body halves	Gate valve strained during assembly	Loosen flange screw and install according to instructions
	Sealing compound between body halves destroyed	Remove gate valve and reseal according to instructions
Gate valve plate cannot be moved	Drive elements defective.	**Manually operated gate valves:** Check, clean the spindle or the TR nut, if necessary replace the defective parts, lubricate.
		Pneumatically and oil-hydraulically operated gate valves: Check the control pressure Check whether there is current for control valve Check if control valve is defective Check whether the actuating cylinder (seal) is defective Clean, lubricate, if necessary replace the defective parts according to the manufacturer's instructions.
		Electrically operated gate valves: Check if current is present Check if the motor is defective Check whether the limit switch is defective or misaligned Check whether the gear or the spindle nut is defective Clean, lubricate, if necessary replace the defective parts according to the manufacturer's instructions.
	Gate valve clogged; gate valve plate dirty	Remove gate valve, clean, possibly disassemble completely
	Gate valve plate clamped (only for AT100)	Check the flange screws used in the upper area (panel outlet) for length. Replace the flange screws if necessary.
Closing or opening process stalls.	Insufficient control pressure.	Pneumatically and oil-hydraulically operated gate valves: Check control pressure, increase control pressure if necessary
	Control valve contaminated.	Remove and clean the control valve, install dirt trap if necessary.
	Piston seal defective	Remove and clean piston seal, replace cylinder seals and regrease
	Gate valve clogged	Check line connections, tighten, replace if necessary
Pressure loss in the control medium	Line connections defective	Check line connections, tighten, replace if necessary
	Cylinder seal defective	Check and replace cylinder seal, regrease Check piston rod, clean, regrease

For further questions please contact the service:

Tel. +49 (0) 231/ 61009-0.

If the error can not be corrected, the product must be returned to the manufacturer. In this case, the valve must be completely cleaned to prevent any injuries or health hazards due to residues of the flow media.

When returning the product to the manufacturer, enclose the safety data sheet of the media. Furthermore, if necessary, it must be stated which safety measures have to be observed when handling the returned product.

11 Annex

11.1 Mounting of operating elements



⚠ DANGER

There is an acute danger to life when opening a pressurized valve!

Opening of screw connenctions, limit switches, manual overrides or auxiliary equipment when the valve is under pressure may result in eruption of the fluid and damage to the valve.



⚠ WARNING

Observe safety instructions

Before any work on the valve, the general safety information must be read and observed.



NOTICE

Subsequent construction

In the event of subsequent assembly of operating elements and actuators, which is not carried out by our personnel, we do not assume any warranty for the correct function of the valve.



NOTICE

Qualified persons

Work on the valve may only be carried out by qualified and authorised persons.



NOTICE

Opening a (pressurized) valve

Since the operator of the valve is responsible for a safety rating, it is important to observe and comply with all local and company safety regulations. In addition, in order to ensure safe working on a valve, at least all safety precautions listed below must be taken:

a) Make sure that the pipe section into which the valve has been integrated is depressurised and drained.

b) Let the valve and the flow medium cool down. If dangerous substances have flowed through the relevant pipe section, it must be additionally rinsed and aerated.

c) Remove attached actuators before removing the valve or secure them against unauthorized use and accidental operation.

The highest tightness is only achieved when the gate valve plate is exactly closed. If operating elements (hand levers, gear, actuators, etc.) are installed, the end position must be set precisely.

Adjustment of the electric actuator:

Move the gate valve in the “CLOSE” direction until a slight increase in the running torque of the actuator can be seen. Turn the actuator handwheel in the “OPEN” direction to compensate for the overrun of the actuator. Adjust the “CLOSED” limit switch in this position.

Then move the gate valve in the “OPEN” direction until the gate valve is fully open. In this position, adjust the “OPEN” limit switch. It is essential to additionally observe the instructions of the actuator manufacturer!

Adjustment of the pneumatic / hydraulic cylinder:

Cylinders are adjusted in the “CLOSE” direction with a preload set by the factory for each nominal size.

Excessive preload may result in a defect of the valve.

Cylinders are limited and designed by their internal stroke in the “OPEN” direction.