Table of contents

GOLDAMMER
REGELUNGSTECHNIK GMBH

Schöllersheiderstr. 15
D-40822 Mettmann
Postfach 10 02 17
D-40802 Mettmann

TELEFON 02104/12093
TELEFAX 02104/12028
www.goldammer-regelungstechnik.com
info@goldammer-regelungstechnik.com

Level regulator for tank insert

series IN

- different tank connections available
- with fixed or adjustable level contacts
- optional with temperature monitoring
- optional explosion-proof version
- till 150°C-version available

NR 1/2" - 3/4" - G1" - M20 - M24

Level regulator for tank insert

serial No.	Date
IN-GB- 100	04/18

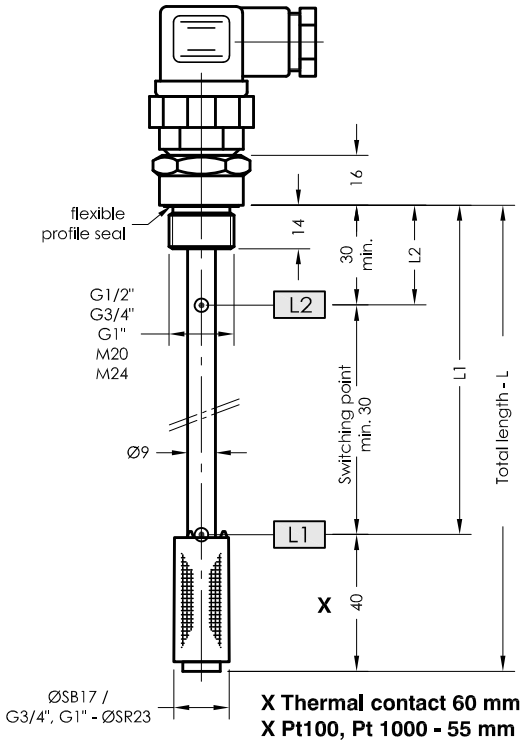

Order code

Specimen order

NR 1/2" - L250 - 01 - L1/190/S - T70Ö - M12 - 24V

Tank connection
1/2"
3/4"
G1"
M20
M24

Total length -L of switching tube (mm)
L = 250
L = 370
L = 500

Level contact type
01 = fixed, plain

Switching point L1-L3/ mm from sealing edge
Ö = break
S = make
Function with increasing level

Pt100
Pt1000
Thermal contact
T10Ö
T40Ö
T50Ö
T60Ö (S)
T70Ö (S)
T80Ö (S)
T90Ö
(Ö preferred)
(Indicate T1... - T2... for two thermal contacts)

Plug socket connector
3+PE
DIN 43651
2xM12
M12

Operating voltage
VDC 10-36 = 24V
VAC 10-230 = 230V

Connector variants

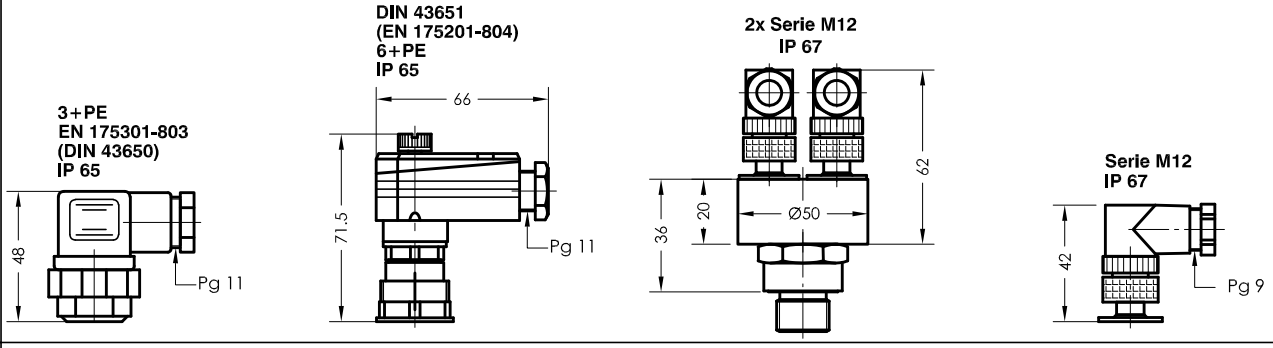

Technical data

Description

The level regulator type NR 1/2", 3/4", G1", M20, M24 for tank insert is a solenoid switch operating without contact with the function of monitoring and regulating liquid levels and temperatures.
The switching tube contains bistable protective gas contacts, fixed in position. For fixed contacts, the contact intervals and their function must be given.
The permanent magnet built into the float switches the contacts when the level changes. The switching difference (hysteresis) is 4 mm. For temperature monitoring and regulation, thermal elements such as thermal contacts can be additionally incorporated.
The level regulator is maintenance - free when nondeposit media are used.
For inductive loads, a protective circuit must be provided (free-wheeling diode/RC element).

The device must only be installed by specialists.

Max. viscosity 150mm²/S

Technical data

Switching tube	Brass, max.L = 800mm
Connection	Brass G1/2" SW27
	Brass G3/4" SW32, G1" SW 41
	Brass M20 x 1,5
	Brass M24 x 1,5
Nominal pressure	1 bar max.
Temperature of medium	80°C max.
Float	Plastic, type SB17 / SR23
	Ceramic, type ELSB17 (seal: viton)
Level contacts	Make/break contacts
Operating voltage	230V max.
Switching current	Datasheet IN - GB - 003
Switching potential	Datasheet IN - GB - 003
Thermal elements	Pt100,Pt 1000, thermal contact
Number of functions	max. 4 can be incorporated
Mounting position	vertical ± 30°
*Thermal contacts	Sheet TR-GB-507

GOLDAMMER
REGELUNGSTECHNIK GMBH
SCHÖLLERSHEIDER STR. 15 PHONE (49) 2104/12093
P.O.BOX 10 02 17 FAX (49) 2104/12028
D-40802 METTMANN www.Goldammer-Regelungstechnik.com

NR 1/2" - 3/4" - M20 - M24

Level regulator for tank insert with 2 thermal contacts

serial No.	Date
IN-GB- 100-1	11/17

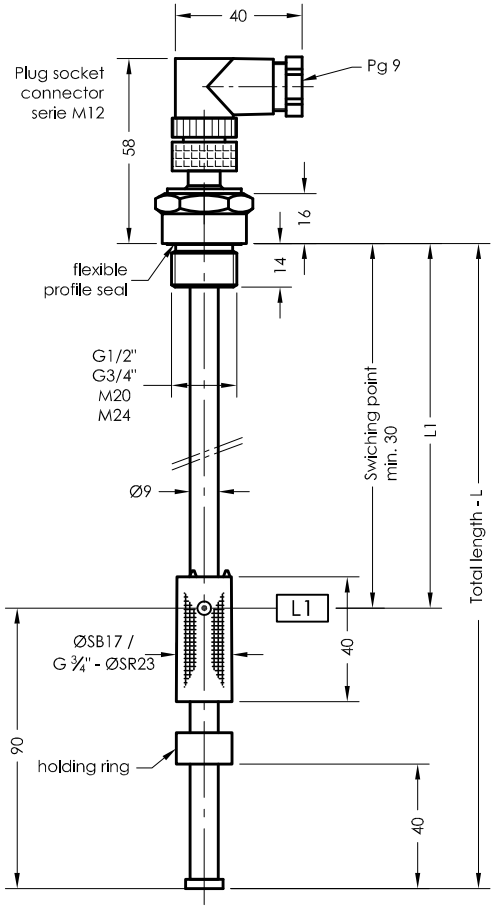

Pin assignment

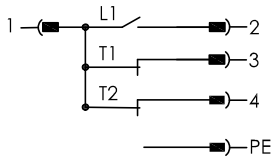

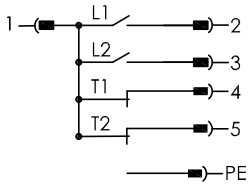

Function tank empty

Pin assignment

Order code

Specimen order

NR 1/2"-L180-01-L1/90/S-T1/40/Ö-T2/70/Ö-M12-24V

Tank connection:
1/2"
3/4"
M20
M24

Total length -L of switching tube (mm)

Level contact type
01 = fixed, plain

Switching point L1-L3/ mm from sealing edge
Ö = break
S = make
Function with increasing level

Pt100
Thermal contact
T10Ö
T40Ö
T50Ö
T60Ö (S)
T70Ö (S)
T80Ö (S)
T90Ö
(Ö preferred)
(Indicate T1... - T2... for two thermal contacts)

Plug socket connector
M12
DIN 43651

Operating voltage
VDC 10-36 = 24V
VAC 10-230 = 230

Connector variants

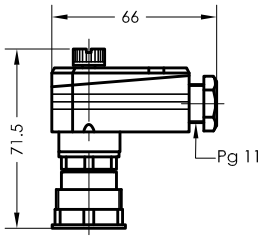

DIN 43651
(EN 175201-804)
6+PE
IP 65

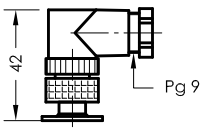

Serie M12
IP 67

Technical data

Description

The level regulator type NR 1/2", 3/4", M20, M24 for tank insert is a solenoid switch operating without contact with the function of monitoring and regulating liquid levels and temperatures.
The switching tube contains bistable protective gas contacts, fixed in position. For fixed contacts, the contact intervals and their function must be given.
The permanent magnet built into the float switches the contacts when the level changes. The switching difference (hysteresis) is 4 mm. For temperature monitoring and regulation, thermal elements such as thermal contacts can be additionally incorporated.
The level regulator is maintenance - free when nondeposit media are used.
For inductive loads, a protective circuit must be provided (free-wheeling diode/RC element).

The device must only be installed by specialists.

Max. viscosity 150mm²/S

Technical data

Switching tube	Brass, max.L = 800mm
Connection	Brass G1/2" SW27
	Brass G3/4" SW32
	Brass M20 x 1,5
	Brass M24 x 1,5
Nominal pressure	1 bar max.
Temperature of medium	80°C max.
Float	Plastic, type SB17
Level contacts	Make/break contacts
Operating voltage	230V max.
Switching current	Datasheet IN - GB - 003
Switching potential	Datasheet IN - GB - 003
Thermal elements	Pt100, thermal contact
Number of functions	max. 4 can be incorporated
Mounting position	vertical ± 30°
*Thermal contacts	Sheet TR-GB-507

GOLDAMMER
REGELUNGSTECHNIK GMBH

SCHÖLLERSHEIDER STR. 15 PHONE (49) 2104/12093
P.O.BOX 10 02 17 FAX (49) 2104/12028
D-40802 METTMANN www.Goldammer-Regelungstechnik.com

NR 1/2" - L ....

Level regulator for catch basin

serial No.	Date
IN-GB- 100-2	11/17

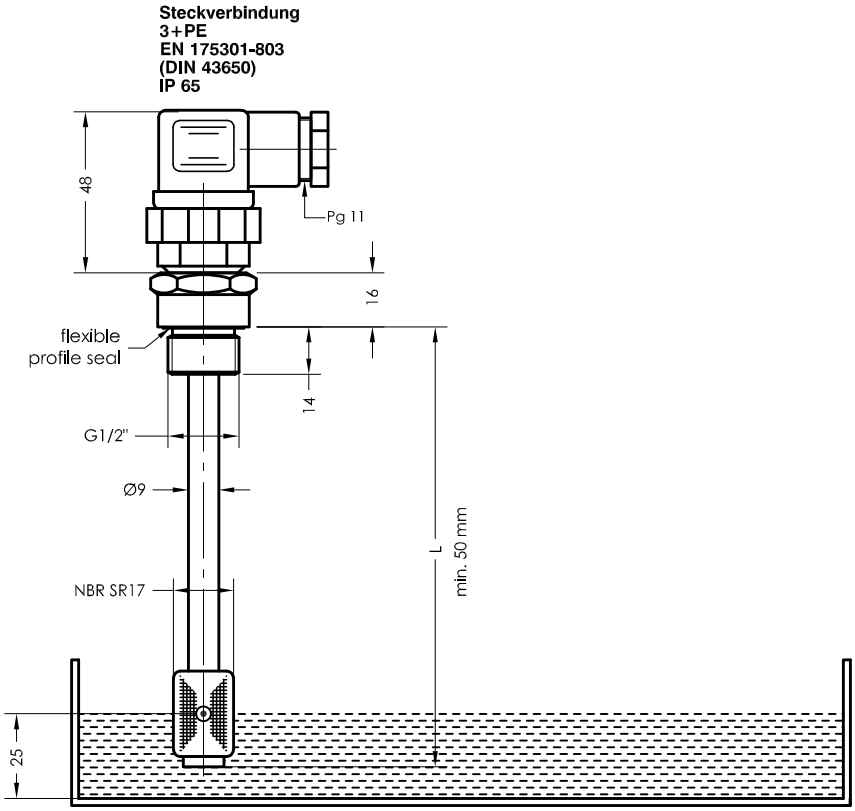

Pin assignment

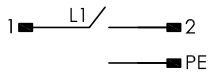

function catch basin empty

S = Make

Pin assignment

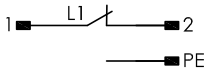

function catch basin empty

Ö = Break

Order code

Specimen order

NR 1/2" - L - 01M - Ö - 3+PE - 24V

- **1/2"** — Tank connection
- **L** — Total length -L Swiching tube (mm)
- **01M** — Level contact type 01M = fixed, plain
- **Ö** — Switching point: Ö = break, S = make; Function with increasing level
- **3+PE - 24V** — Operating voltage VDC 10-36 = 24V, VAC 10-230 = 230V

Technical data

Description

The level regulator type NR 1/2" - L... is a solenoid switch operating without contact with the function of monitoring fluid levels in catch basins. The switching tube contains bistable protective gas contacts, fixed in position.
The permanent magnet built into the float opens or closes the contact when the level rises.
The level height is 20-25mm.

The level regulator is maintenance - free when nondeposit media are used.

For inductive loads, a protective circuit must be provided (free-wheeling diode/RC element).

The device must only be installed by specialists.

Max. viscosity 150mm²/S

Technical data

Switching tube	Brass
Connection	Brass G1/2" SW27
Nominal pressure	1 bar max.
Temperature of medium	80°C max.
Float	NBR SB17
Level contacts	increasing break contacts
Operating voltage	230V max.
Switching current	Datasheet IN - GB - 003
Switching potential	Datasheet IN - GB - 003
Mounting position	vertical ± 30°

GOLDAMMER
REGELUNGSTECHNIK GMBH
SCHÖLLERSHEIDER STR. 15 PHONE (49) 2104/12093
P.O.BOX 10 02 17 FAX (49) 2104/12028
D-40802 METTMANN www.Goldammer-Regelungstechnik.com

NR 1/2" - 3/4" - G1" - M20 - Flange I, II

Level regulator for tank insert

serial No.	Date
IN-GB- 100a	07/18

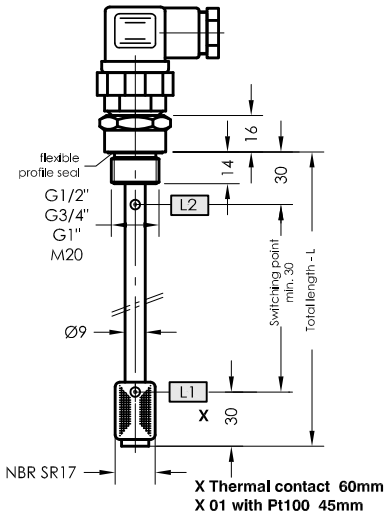

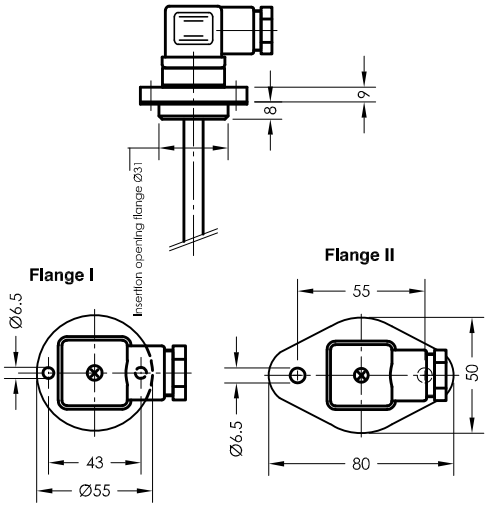

Order code

Specimen order

NR 1/2" - L250 -01M - L1/190/S - T70Ö - M12 - 24V

Tank connection:
1/2"
3/4"
G1"
M20
Flange I
Flange II
Total length -L

Level contact type
01M = fixed-plain
02M = fixed-changeover

Switching point L1 - L2 mm from sealing edge
Ö = break
S = make
W = Changeover
Function with increasing level

Pt100 Thermal contact
T10Ö
T40Ö
T50Ö
T60Ö (S) (Ö
T70Ö (S) preferred)
T80Ö (S)
T90Ö

Plug socket connector 3+PE, M12

Operating voltage
VDC 10-36 = 24V
VAC 10-230 = 230V

Connector variants

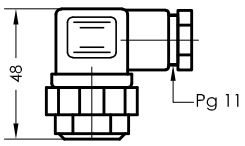

3+PE
EN 175301-803
(DIN 43650)
IP 65

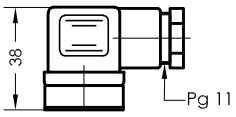

3+PE
EN 175301-803
(DIN 43650)
IP 65

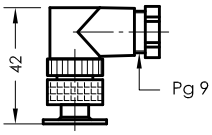

Serie M12
IP 67

Technical data

Description

The level regulator type NR 1/2", 3/4", G1", M20, Flange I/II for tank insert is a solenoid switch operating without contact with the function of monitoring and regulating liquid levels and temperatures. The switching tube contains bistable protective gas contacts, fixed in position. For fixed contacts, the contact intervals and their function must be given.
The permanent magnet built into the float switches the contact when the level changes. The switching difference (hysteresis) is 4 mm. For temperature monitoring and regulation, thermal elements such as thermal contacts can be additionally incorporated.
The level regulator is maintenance - free when nondeposit media are used.
For inductive loads, a protective circuit must be provided (free-wheeling diode/RC element).

The device must only be installed by specialists.

Max. viscosity 150mm²/S

Technical data

Switching tube	Brass, max.L = 800mm
Connection	Brass G1/2" SW27,Brass G3/4" SW32 G1" SW 41, Brass M20 x 1,5 Flange I - Material AL with flat seel Flange II - Material PA with flat seel
Nominal pressure	1 bar max.
Temperature of medium	80°C max.
Float	NBR SB17
Level contacts	Make / break contacts/changeover
Plug socket connector	DIN 43650 3+PE IP65 or serie M12 IP67
Operating voltage	230V max.
Switching current	Datasheet IN - GB - 003
Switching potential	Datasheet IN - GB - 003
Thermal elements	Pt100/ 1000
Number of functions	3 max. can be incorp.
Mounting position	vertical ± 30°
*Thermal contacts	Sheet TR-GB-507

GOLDAMMER
REGELUNGSTECHNIK GMBH
SCHÖLLERSHEIDER STR. 15 PHONE (49) 2104/12093
P.O.BOX 10 02 17 FAX (49) 2104/12028
D-40802 METTMANN www.Goldammer-Regelungstechnik.com

NR 25 ...

Level regulator for tank insert

serial No. Date
IN-GB- 100 b 11/17

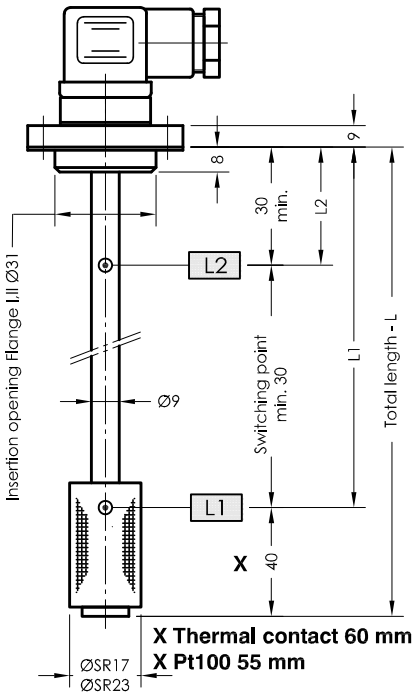

Order code

Specimen order
NR 25 - I - L250-01-L1/190/S-T70Ö-M12-24V

Flange I
Flange II

Total length -L of switching tube (mm)
standard length
L=250
L=370
L=500

Level contact type
01 = fixed-plain
02M SR17 = fixed-changerover

Switching point L1-L3/ mm from sealing edge
Ö = break
S = make
W = Changeover
Function with increasing level

Pt100
Thermal contact
T10Ö
T40Ö
T50Ö
T60Ö (S)
T70Ö (S) (Ö preferred)
T80Ö (S)
T90Ö

Plug socket connector
3+PE
M12 - Flange

Operating voltage
VDC 10-36 = 24V
VAC 10-230 = 230V

Flange I

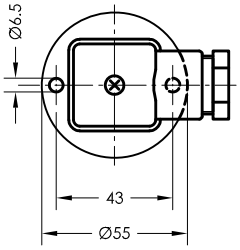

Flange II

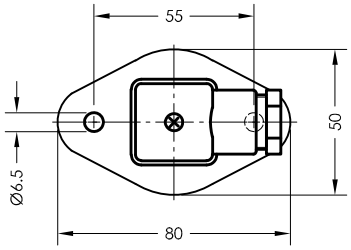

Connector variants

3+PE
EN 175301-803
(DIN 43650)
IP 65

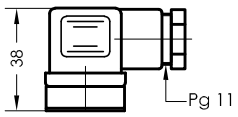

Serie M12
IP 67

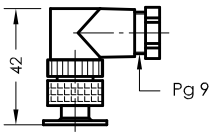

Technical data

Description

The level regulator type NR 25 ... for tank insert is a solenoid switch operating without contact with the function of monitoring and regulating liquid levels and temperatures.
The switching tube contains bistable protective gas contacts, fixed in position. For fixed contacts, the contact intervals and their function must be given.
The permanent magnet built into the float switches the contacts when the level changes. The switching difference (hysteresis) is 4 mm. For temperature monitoring and regulation, thermal elements such as thermal contacts can be additionally incorporated.
The level regulator is maintenance - free when nondeposit media are used.
For inductive loads, a protective circuit must be provided (free-wheeling diode/RC element).

The device must only be installed by specialists.

Max. viscosity 150mm²/S

Technical data

Switching tube	Brass, max.L = 800mm
Connection flange	Aliminium / Polyamide, with flat seal
Nominal pressure	1 bar max.
Temperature of medium	80°C max.
Float	Plastic - type SR17 / SR23
Level contacts	Make/break contacts/changerover
Operating voltage	230V AC max.
Switching potential	Datasheet IN - GB - 003
Thermal elements	Pt100, thermal contact
Number of functions	max. 3 can be incorporated
Mounting position	vertical ± 30°
*Thermal contact	Sheet TR-GB-507

GOLDAMMER
REGELUNGSTECHNIK GMBH
SCHÖLLERSHEIDER STR. 15 PHONE (49) 2104/12093
P.O.BOX 10 02 17 FAX (49) 2104/12028
D-40802 METTMANN www.Goldammer-Regelungstechnik.com

NR M18

Level regulator for tank insert

serial No.	Date
IN-GB- 100c	04/18

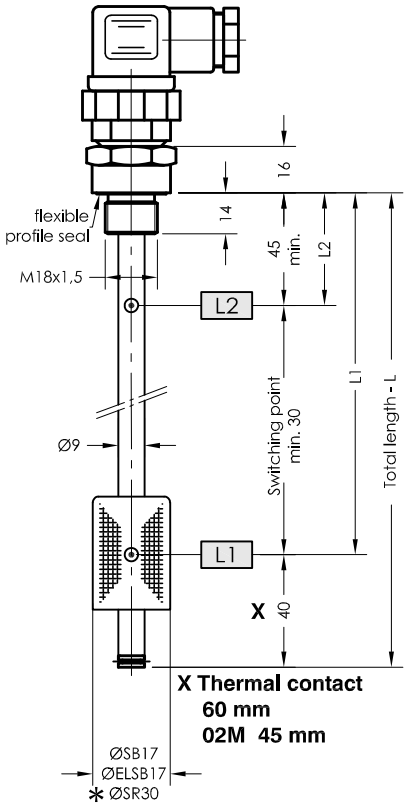

Order code

Specimen order

NR M18-SB17-L250-01-L1/190/S-T70Ö-DIN 43651-24V

Tank connection
M18x1,5

Float type
SB17
ELSB17
SR30 (02M) *

Total length -L of switching tube (mm)
Standard length
L=250
L=370
L=500

Level contact type
01 = fixed, plain
02M = Monostably-fixed, changeover

Switching point L1-L2 mm from sealing edge
Ö = break
S = make
W = changeover
Function with increasing level

Thermal contact
T10Ö
T40Ö
T50Ö
T60Ö (S)
T70Ö (S)
T80Ö (S)
T90Ö
(Ö preferred)
(Indicate T1... - T2... for two thermal contacts)

Operating voltage
VDC 10-36 = 24V
VAC 10-230 = 230V

Plug socket connector
3+PE
DIN 43651
M12

Connector variants

3+PE
EN 175301-803
(DIN 43650)
IP 65

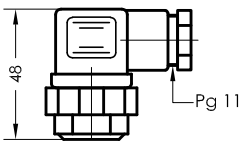

DIN 43651
(EN 175201-804)
6+PE
IP 65

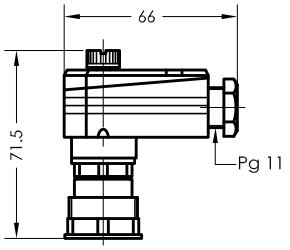

Serie M12
IP 67

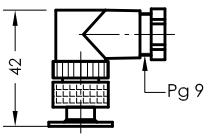

Technical data

Description

The level regulator type NR M18 for tank insert is a solenoid switch operating without contact with the function of monitoring and regulating liquid levels and temperatures.
The switching tube contains bistable protective gas contacts, fixed in position. For fixed contacts, the contact intervals and their function must be given.
The permanent magnet built into the float switches the contacts when the level changes. The switching difference (hysteresis) is 4 mm. For temperature monitoring and regulation, thermal elements such as thermal contacts can be additionally incorporated.
The level regulator is maintenance - free when nondeposit media are used.
For inductive loads, a protective circuit must be provided (free-wheeling diode/RC element).
The device must only be installed by specialists.

Max. viscosity 150mm²/S
Important! The float assembly must take place in the tank.
When mounting the float the magnet must shown to the top.

Technical data

Switching tube	Brass, max.L = 800mm
Connection	M18x1,5 SW24
Nominal pressure	1 bar max.
Temperature of medium	80°C max.
Float	Plastic type SB17, SR30 ceramic ELSB17
Level contacts	break, make, changeover
Operating voltage	230V AC max.
Switching current	Datasheet IN - GB - 003
Switching potential	Datasheet IN - GB - 003
Number of functions	max. 2 can be incorporated contact type 01: max. 1 can be incorporated contact type 02M:
Mounting position	vertical ± 30°
*Thermal contacts	Sheet TR-GB-507

GOLDAMMER
REGELUNGSTECHNIK GMBH
SCHÖLLERSHEIDER STR. 15 PHONE (49) 2104/12093
P.O.BOX 10 02 17 FAX (49) 2104/12028
D-40802 METTMANN www.Goldammer-Regelungstechnik.com

NR 1/2" - 3/4" - M20 - M24 - Desina

Level regulator for tank insert

serial No.	Date
IN-GB- 100d	11/17

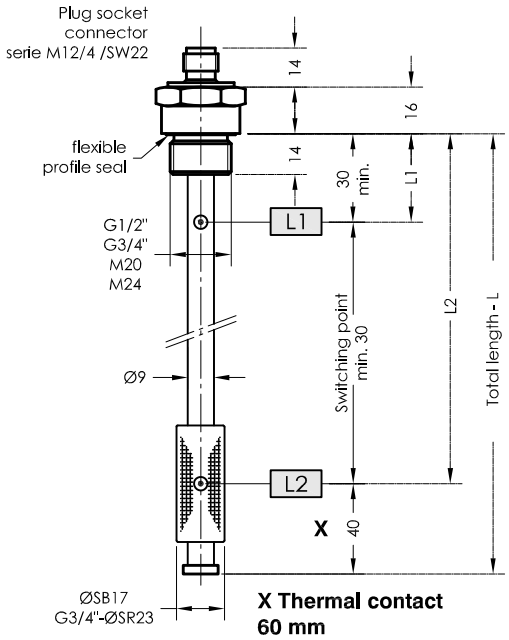

DESINA standard

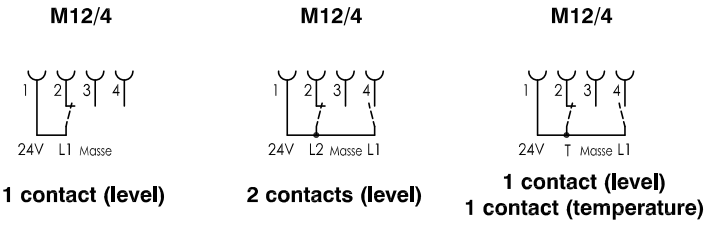

Function: With falling level

Specimen order

NR 1/2"-L250-01-L1/190/S-T70Ö-M12-Desina

Order code

Tank connection:
1/2"
3/4"
M20
M24

Total length -L of switching tube (mm)
Standard length
L=250
L=370
L=500

Level contact type
01 = fixed, plain

Thermal contact
T10Ö
T40Ö
T50Ö
T60Ö (S)
T70Ö (S)
T80Ö (S)
T90Ö
(Ö preferred)
(Indicate T1... - T2... for two thermal contacts)

Switching point L1-L2/mm from sealing edge
Ö = break
S = make
Function: With falling level

Technical data

Description

The level regulator type NR 1/2", 3/4", M20, M24 for tank insert is a solenoid switch operating without contact with the function of monitoring and regulating liquid levels and temperatures.
The switching tube contains bistable protective gas contacts, fixed in position. For fixed contacts, the contact intervals and their function must be given.
The permanent magnet built into the float switches the contacts when the level changes. The switching difference (hysteresis) is 4 mm. For temperature monitoring and regulation, thermal elements such as thermal contacts can be additionally incorporated.
The level regulator is maintenance - free when nondeposit media are used.
For inductive loads, a protective circuit must be provided (free-wheeling diode/RC element).

The device must only be installed by specialists.

Max. viscosity 150mm²/S

Technical data

Switching tube	Brass, max.L = 800mm
Connection	Brass G1/2" SW27
	Brass G3/4" SW32
	Brass M20 x 1,5
	Brass M24 x 1,5
Nominal pressure	1 bar max.
Temperature of medium	80°C max.
Float	Plastic, type SB17 / SR23
	Ceramic, type ELSB17 (seal: viton)
Level contacts	Make/break contacts
Plug socket connector	serie M12 IP67
Operating voltage	24V DC max.
Switching current	Datasheet IN - GB - 003
Switching potential	Datasheet IN - GB - 003
Number of functions	max. 2 can be incorporated
Mounting position	vertical ± 30°
*Thermal contacts	Sheet TR-GB-507

GOLDAMMER
REGELUNGSTECHNIK GMBH
SCHÖLLERSHEIDER STR. 15 PHONE (49) 2104/12093
P.O.BOX 10 02 17 FAX (49) 2104/12028
D-40802 METTMANN www.Goldammer-Regelungstechnik.com

NR 30

Level regulator for tank insert

serial No.	Date
IN-GB- 101	01/19

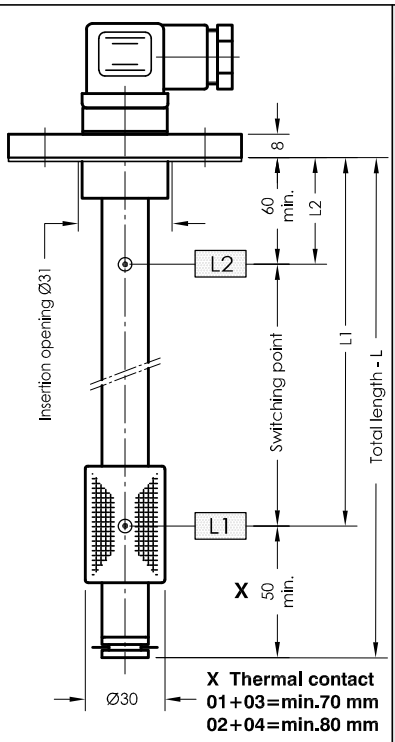

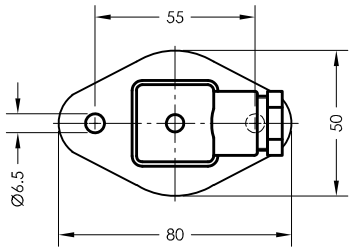

Order code

Specimen order

NR 30-SR30-L370-03-L1/300/S-T70Ö-MS-M12-24V

Float type
SR30

Total length-L
switching tube (mm)
Standard length
L=250 L=500
L=370 L=800

Level contact type
OK= cordless contact (max. 500mm)
01 = fixed, plain
02 = fixed, changeover
03 = adjustable, plain
04 = adjustable changeover (max. 2 functions)

Switching point L1-L3/ mm from sealing edge
Ö = break
S = make
W= changeover
Function with increasing level

Execution
MS = Brass
VA = Switching tube

Operating voltage
VDC 10-36 = 24V
VAC 10-230 = 230V

Plug socket connector
3+PE
DIN 43651
M12
3 pol. + PE
6 pol. + PE

Pt100
Thermal contact
T10Ö
T40Ö
T50Ö
T60Ö (S)
T70Ö (S) (Ö preferred)
T80Ö (S)
T90Ö
(Indicate T1... - T2... for two thermal contacts)

Connector variants

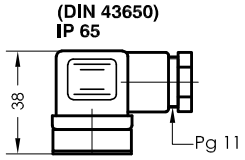

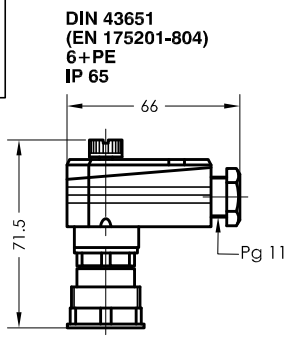

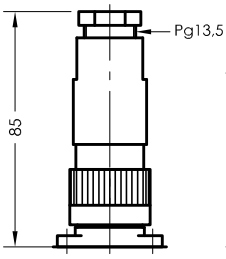

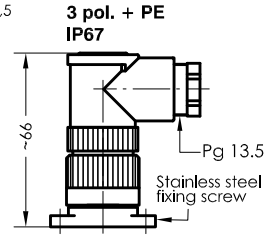

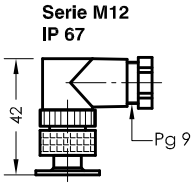

Technical data

Description

The level regulator type NR 30 for tank insert is a solenoid switch operating without contact with the function of monitoring and regulating liquid levels and temperatures.
The switching tube contains bistable protective gas contacts. They may be fixed or alternatively mounted as an adjustable contact cartridge on a perforated strip. For fixed contacts, the contact intervals and their functions must be given. Plain contact cartridges can be subsequently adjusted for height. The function of make or break can then be altered by turning the cartridge through 180° degrees.
The permanent magnet built into the float switches the contacts when the level changes. The switching difference (hysteresis) is 4 mm. For temperature monitoring and regulation, thermal elements such as Pt100 and thermal contacts can be additionally incorporated.
The level controller is maintenance - free when nondeposit media are used.
For inductive loads, a protective circuit must be provided (free-wheeling diode/RC element).
The device must only be installed by specialists.
Max. viscosity 150mm²/S

Technical data

Switching tube	Brass, max.L = 800mm
Connection flange	Polyamide with flat seal
Nominal pressure	1 bar max.
Temperature of medium	100°C max.
Float	Hard-PU, type SR 30 Ceramic, type ELSR30
Level contacts	bistable make/break/changeover optional fixed or adjustable
Switching potential	Datasheet IN - GB - 003(004)
Thermal elements	Pt100, thermal contact
Number of functions	max. 3 can be incorporated
Mounting position	vertical ± 30°
*Thermal contact	Sheet TR-GB-507

GOLDAMMER
REGELUNGSTECHNIK GMBH
SCHÖLLERSHEIDER STR. 15 PHONE (49) 2104/12093
P.O.BOX 10 02 17 FAX (49) 2104/12028
D-40802 METTMANN www.Goldammer-Regelungstechnik.com

NR 50 / 70 / 85

Level regulator for tank insert

serial No.	Date
IN-GB- 102	09/19

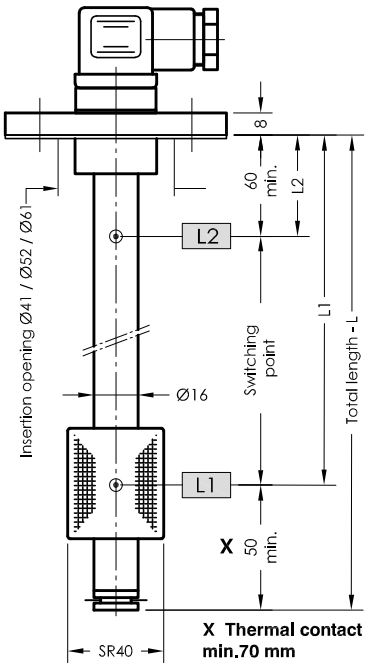

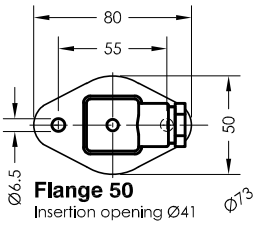

Flange 50
Insertion opening Ø41

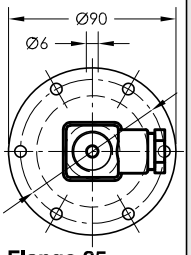

Flange 85
according to DIN24557 part 2
Insertion opening Ø61

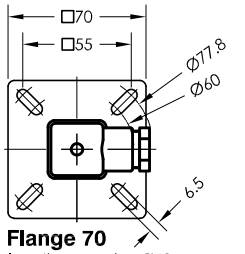

Flange 70
Insertion opening Ø52

Order code

Specimen order

NR 50 -SR40-L370-OK-L1/300/S-T70Ö-MS-M12

Connection
50
70
85

Float type
SR 40

Total length-L switching tube (mm)
Standard lenght
L=250
L=370
L=500

Level contact type
OK = Cableless contacts (max. 500mm)
01 = fixed, plain02 = fixed, changeover
02 = fixed, changeover
03 = adjustable, plain
04 = adjustable, changeover (max. 2 functions)

Pt100
Thermal contact
T10Ö
T40Ö
T50Ö
T60Ö (S)
T70Ö (S)
T80Ö (S)
T90Ö
(Ö preferred)

Switching point L1-L2/ mm from sealing edge
Ö = break
S = make
Function with increasing level

Execution
MS = Brass

Plug socket connector
3+PE 6 pol.+PE
DIN 43651
M12

Connector variants

3+PE
EN 175301-803
(DIN 43650)
IP 65

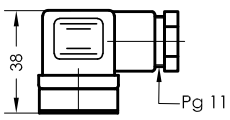

DIN 43651
(EN 175201-804)
6+PE
IP 65

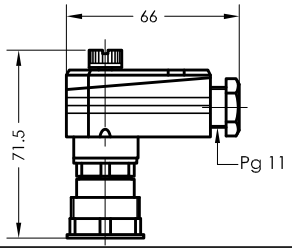

6 pol. + PE
IP 67

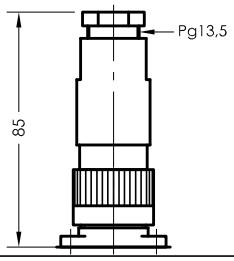

3 pol. + PE
IP67

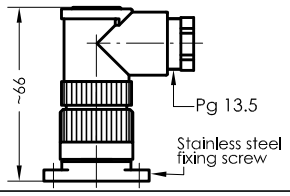

Serie M12
IP 67

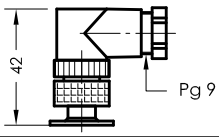

Technical data

Description

The level regulator type NR 50 / 70 / 85 for tank insert is a solenoid switch operating without contact with the function of monitoring and regulating liquid levels and temperatures.
The switching tube contains bistable protective gas contacts. They may be fixed or alternatively mounted as an adjustable contact cartridge on a perforated strip. For fixed contacts, the contact intervals and their functions must be given. Plain contact cartridges can be subsequently adjusted for height. The function of make or break can then be altered by turning the cartridge through 180° degrees. The permanent magnet built into the float switches the contacts when the level changes. The switching difference (hysteresis) is 4 mm. For temperature monitoring and regulation, thermal elements such as Pt100 and thermal contacts can be additionally incorporated.
The level controller is maintenance - free when nondeposit media are used. For inductive loads, a protective circuit must be provided (free-wheeling diode/RC element).
The device must only be installed by specialists.

Max. viscosity 320mm²/S

Technical data

Switch tube	Brass max.L = 1000mm
Mounting flange	Polyamide with flat seal / Stainless steel
Nominal pressure	1 bar max.
Temperature of medium	100°C max.
Float	Rigid PU, type SR 40
Level contacts	bistable make/break
Switching potential	Datasheet IN - GB - 003(004)
Thermoelements	Pt100, thermal contact
Number of functions	max. 4 adjustable
Mounting position	vertical ± 30°
*Thermal contact	Sheet TR-GB-507

GOLDAMMER
REGELUNGSTECHNIK GMBH
SCHÖLLERSHEIDER STR. 15 PHONE (49) 2104/12093
P.O.BOX 10 02 17 FAX (49) 2104/12028
D-40802 METTMANN www.Goldammer-Regelungstechnik.com

NR 30 / 50 / 70 / 85 - V

Level regulator for tank insert

serial No.	Date
IN-GB- 104	11/17

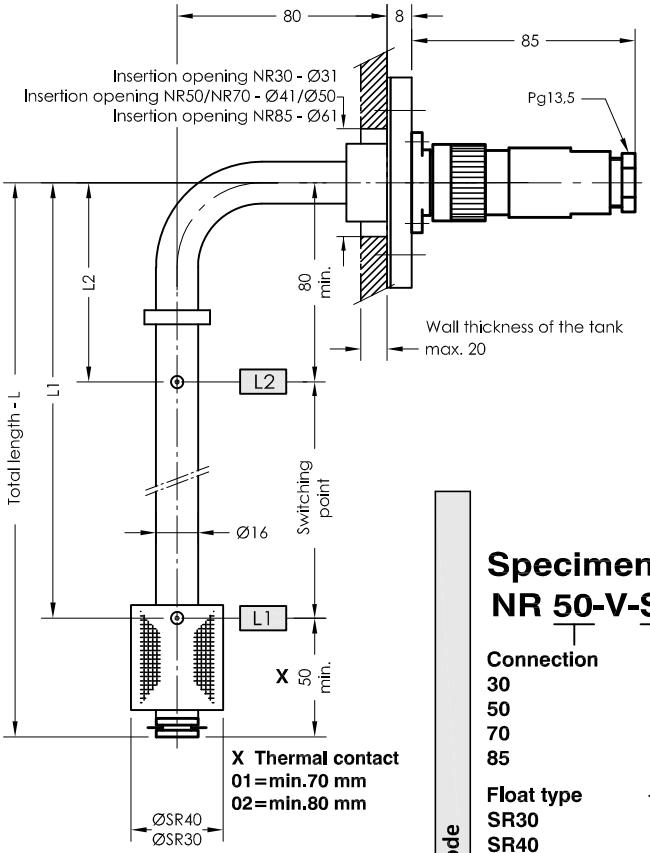

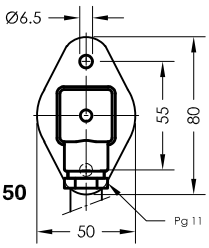

Flange 50

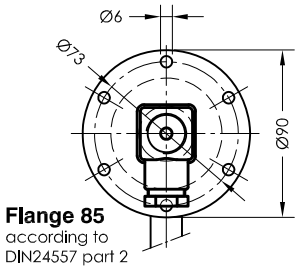

Flange 85
according to DIN24557 part 2

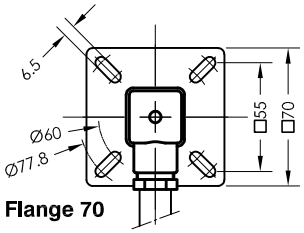

Flange 70

Specimen order

NR 50-V-SR40-L270-01-L1/200/S-T70Ö-M12-24V

Order code

Connection
30
50
70
85

Float type
SR30
SR40

Total length-L switching tube (mm)

Level contact type
01 = fixed, plain
02 = fixed, changeover

Switching point L1-L3/ mm from sealing edge
Ö = break
S = make
W= changeover
Function with increasing level

Pt100 Thermal contact
T10Ö
T40Ö
T50Ö
T60Ö (S)
T70Ö (S)
T80Ö (S)
T90Ö
(Ö preferred)
(Indicate T1... - T2... for two thermal contacts)

Plug socket connector
3+PE
DIN 43651
M12
3 pol. + PE
6 pol. + PE

Operating voltage
VDC 10-36 = 24V
VAC 10-230 = 230V

Connector variants

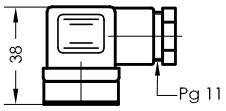

3+PE
EN 175301-803
(DIN 43650)
IP 65

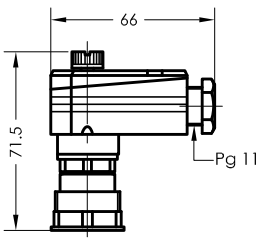

DIN 43651
(EN 175201-804)
6+PE
IP 65

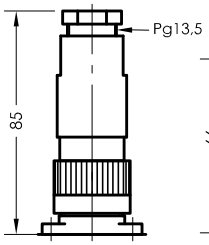

6 pol. + PE
IP 67

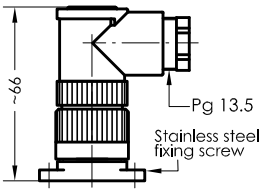

3 pol. + PE
IP67

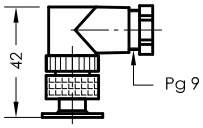

Serie M12
IP 67

Technical data

Description

The level regulator type NR 30 / 50 / 70 / 85 - V for tank insert is a solenoid switch operating without contact with the function of monitoring and regulating liquid levels and temperatures.
The switching tube contains bistable protective gas contacts.
For fixed contacts, the contact intervals and their functions must be given.
The permanent magnet built into the float switches the contacts when the level changes. The switching difference (hysteresis) is 4 mm. For temperature monitoring and regulation, thermal elements such as Pt100 and thermal contacts can be additionally incorporated.
The level controller is maintenance - free when nondeposit media are used.
For inductive loads, a protective circuit must be provided (free-wheeling diode/RC element).

The device must only be installed by specialists.

Max. viscosity SR 30 - 150mm²/S, - SR40 - 320mm²/S

Technical data

Switching tube	Brass, max.L = 1000mm
Connection flange	Polyamide with flat seal
Nominal pressure	1 bar max.
Temperature of medium	100°C max.
Float	Hard-PU, type SR30 / SR 40
Level contacts	bistable make/break/changeover
Switching potential	Datasheet IN - GB - 003(004)
Thermal elements	Pt100, thermal contact
Number of functions	max. 3 can be incorporated
Mounting position	vertical ± 30°
*Thermal contact	Sheet TR-GB-507

GOLDAMMER
REGELUNGSTECHNIK GMBH
SCHÖLLERSHEIDER STR. 15 PHONE (49) 2104/12093
P.O.BOX 10 02 17 FAX (49) 2104/12028
D-40802 METTMANN www.Goldammer-Regelungstechnik.com

NR 70

Level regulator for tank insert

serial No.	Date
IN-GB- 105	03/18

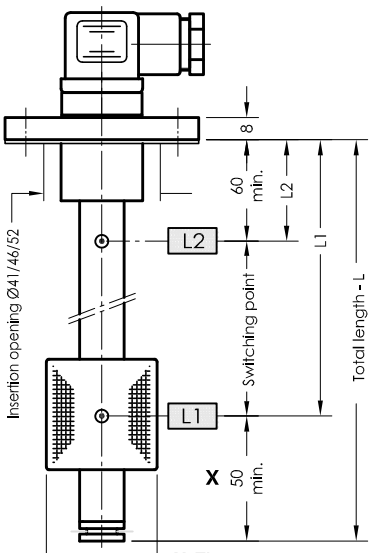

X Thermal contact
01+0
3=min.70 mm
02+04=min.80 mm
VR50=min.60 mm

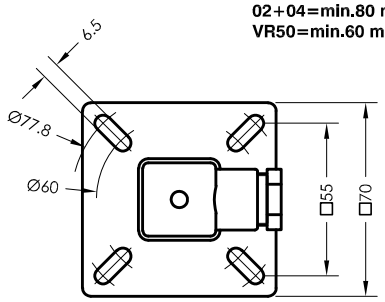

Specimen order

NR 70 -SR45-L370-03-L1/300/S-T70Ö-MS-M12-24V

Order code

Float type
SR45
VR50

Total length-L
switching tube (mm)
Standard length
L=250 L=370
L=500 L=800

Level contact type
OK= cordless contact (max. 1000mm)
01 = fixed, plain
02 = fixed, changeover
03 = adjustable, plain
04 = adjustable, changeover

Switching point L1-L5/
mm from sealing edge
Ö = break
S = make
W= changeover
Function with
increasing level

Pt100
Thermal contact
T10Ö
T40Ö
T50Ö
T60Ö (S)
T70Ö (S) (Ö preferred)
T80Ö (S)
T90Ö
(Indicate T1... - T2... for two thermal contacts)

Execution
MS = Brass
VA = Flange,
Switching tube
Stainless steel

Plug socket connector
3+PE 6 pol.+PE
DIN 43651 HAN I
M12 HAN II
3 pol. + PE

Operating voltage
VDC 10-36 = 24V
VAC 10-230 = 230V

Connector variants

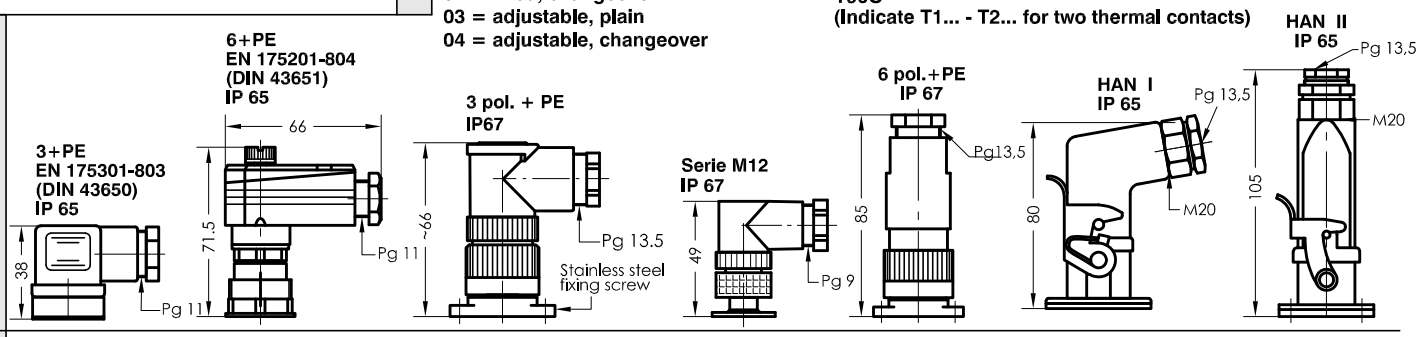

Technical data

Description

The level regulator type NR 70 for tank insert is a solenoid switch operating without contact with the function of monitoring and regulating liquid levels and temperatures.
The switching tube contains bistable protective gas contacts. They may be fixed or alternatively mounted as an adjustable contact cartridge on a perforated strip. For fixed contacts, the contact intervals and their functions must be given. Plain contact cartridges can be subsequently adjusted for height. The function of make or break can then be altered by turning the cartridge through 180° degrees.
The permanent magnet built into the float switches the contacts when the level changes. The switching difference (hysteresis) is 4 mm. For temperature monitoring and regulation, thermal elements such as Pt100 and thermal contacts can be additionally incorporated.
The level controller is maintenance - free when nondeposit media are used.
For inductive loads, a protective circuit must be provided (free-wheeling diode/RC element).
The device must only be installed by specialists.

Max. viscosity SR 40 / SR45 - 320mm²/S
VR50 - 320mm²/S

Technical data

Switching tube	Brass or stainless steel max.L = 2000mm
Connection flange	Polyamide or stainless steel with flat seal
Nominal pressure	1 bar max
Temperature of medium	100°C max.
Float	Hard Pu SR45 / Stainless steel VR50
Level contacts	bistable make/break/changeover optional fixed or adjustable
Switching potential	Datasheet IN - GB - 003(004)
Thermal elements	Pt100, thermal contact
Number of functions	max. 5 can be incorporated
Mounting position	vertical ± 30°
*Thermal contact	Sheet TR-GB-507

GOLDAMMER
REGELUNGSTECHNIK GMBH
SCHÖLLERSHEIDER STR. 15 PHONE (49) 2104/12093
P.O.BOX 10 02 17 FAX (49) 2104/12028
D-40802 METTMANN www.Goldammer-Regelungstechnik.com

NR 70 / 85 - Desina

Level regulator for tank insert

serial No. Date
IN-GB- 105b 11/17

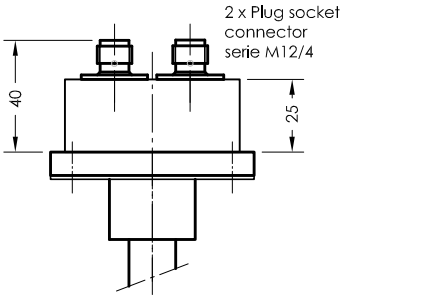

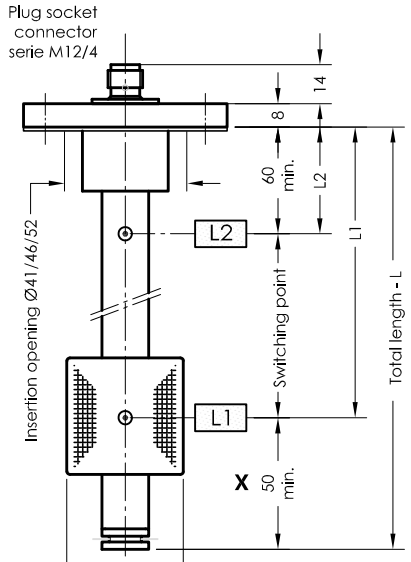

ØSR40
ØSR45
ØVR50

X Thermal contact
01+03=min.70 mm
02+04=min.80 mm
VR50=min.60 mm

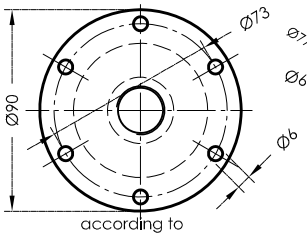

according to DIN24557 part 2
Flange NR85

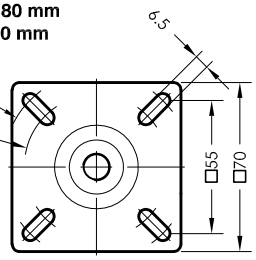

Flange NR70

Pin assignment

DESINA standard

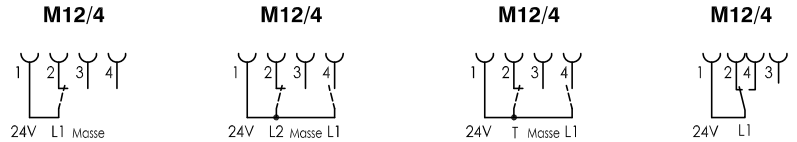

1 contact (level) | 2 contacts (level) | 1 contact (level) 1 contact (temperature) | 1 changeover

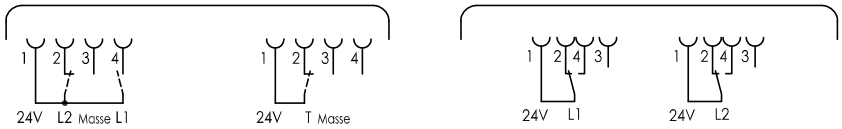

2 contacts (level) + 1 contact (temperature) | 2 changeover contacts (level)

Function: With falling level

Order code

Specimen order

NR 70-SR40-L370-03-L1/300/S-T70Ö-MS-M12-Desina

Float type
SR40
SR45
VR50

Total length-L switching tube (mm)
Standard length
L=250 L=370
L=500 L=800

Level contact type
01 = fixed, plain
02 = fixed, changeover
03 = adjustable, plain
04 = adjustable, changeover

Switching point L1-L5/ mm from sealing edge
Ö = break
S = make
W= changeover
Function with increasing level

Thermal contact
T10Ö
T40Ö
T50Ö
T60Ö (S)
T70Ö (S)
T80Ö (S)
T90Ö
(Ö preferred)
(Indicate T1... - T2... for two thermal contacts)

Plug socket connector M12

Execution
MS = Brass
VA = Flange, Switching tube and float stainless steel

Technical data

Description

The level regulator type NR 70 for tank insert is a solenoid switch operating without contact with the function of monitoring and regulating liquid levels and temperatures.
The switching tube contains bistable protective gas contacts. They may be fixed or alternatively mounted as an adjustable contact cartridge on a perforated strip. For fixed contacts, the contact intervals and their functions must be given. Plain contact cartridges can be subsequently adjusted for height. The function of make or break can then be altered by turning the cartridge through 180° degrees.
The permanent magnet built into the float switches the contacts when the level changes. The switching difference (hysteresis) is 4 mm.
For temperature monitoring and regulation, thermal elements such as Pt100, Sensors and thermal contacts can be additionally incorporated.
The level controller is maintenance - free when nondeposit media are used.
For inductive loads, a protective circuit must be provided (free-wheeling diode/RC element).
The device must only be installed by specialists.

Max. viscosity SR 40 / SR45 - 320mm²/S
VR50 - 320mm/S

Technical data

Switching tube	Brass or stainless steel max.L = 2000mm
Connection flange	Polyamide or stainless steel with flat seal
Nominal pressure	1 bar max.
Temperature of medium	100°C max.
Level contacts	bistable make/break/changeover optional fixed or adjustable
Plug socket connector	Serie M12 IP67 - 24V max.
Switching potential	Datasheet IN - GB - 003(004)
Thermal elements	Pt100, sensor, thermal contact
Number of functions	max. 3 can be incorporated
Mounting position	vertical ± 30°
*Thermal contact	Sheet TR-GB-507

GOLDAMMER
REGELUNGSTECHNIK GMBH
SCHÖLLERSHEIDER STR. 15 PHONE (49) 2104/12093
P.O.BOX 10 02 17 FAX (49) 2104/12028
D-40802 METTMANN www.Goldammer-Regelungstechnik.com

NR 70 / 85 - V

Level regulator for tank insert

serial No.	Date
IN-GB- 106	08/19

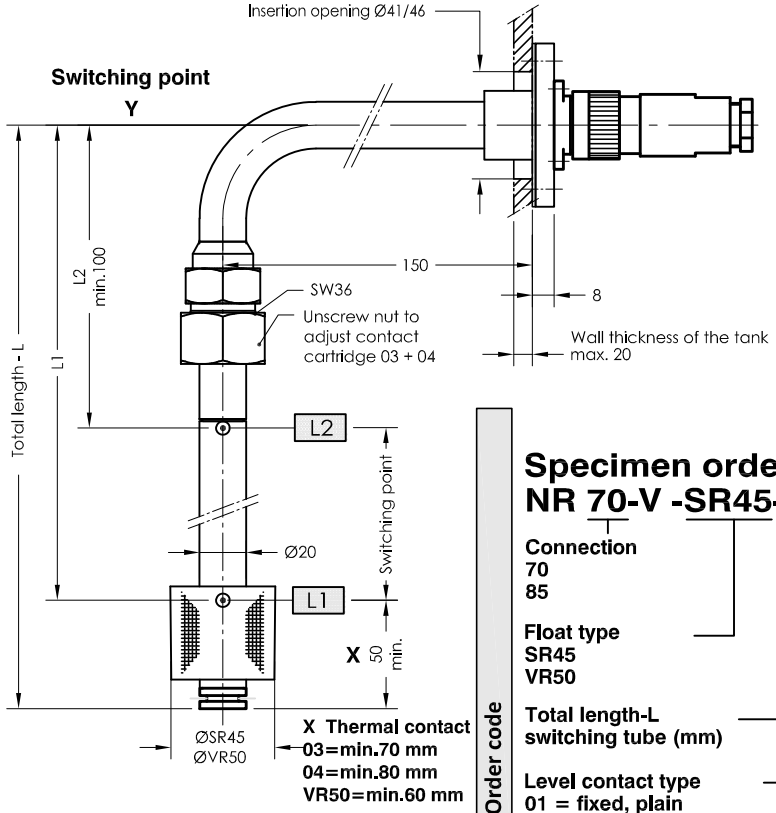

Order code

Specimen order

NR 70-V -SR45-L370-03-L1/300/S-T70Ö-M12-24V

Connection
70
85

Float type
SR45
VR50

Total length-L switching tube (mm)

Level contact type
01 = fixed, plain
02 = fixed, changeover
03 = adjustable, plain
04 = adjustable, changeover

Switching point L1-L5/mm from sealing edge
Ö = break
S = make
W= changeover
Function with increasing level

Pt100
Thermal contact
T10Ö
T40Ö
T50Ö
T60Ö (S)
T70Ö (S) **(Ö preferred)**
T80Ö (S)
T90Ö
(Indicate T1... - T2... for two thermal contacts)

Plug socket connector
3+PE
DIN 43651
M12
3 pol. + PE
6 pol. + PE

Operating voltage
VDC 10-36 = 24V
VAC 10-230 = 230V

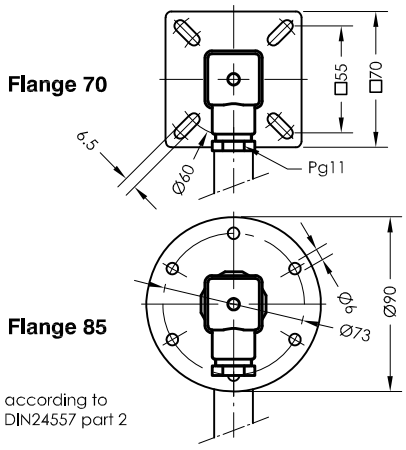

Connector variants

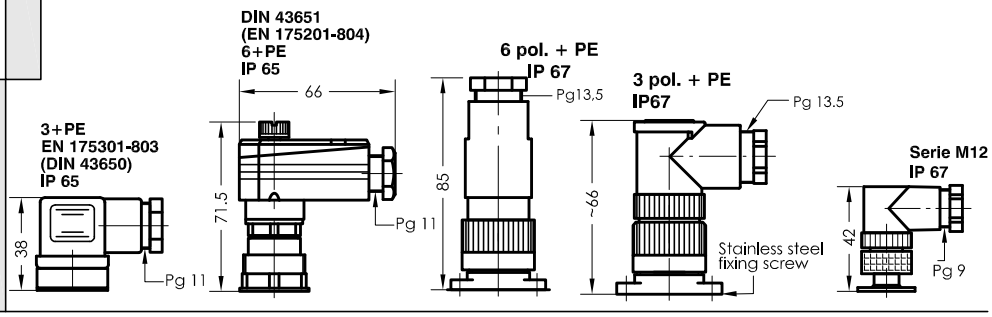

Technical data

Description

The level regulator type NR 70 / 85 - V for tank insert is a solenoid switch operating without contact with the function of monitoring and regulating liquid levels and temperatures.
The switching tube contains bistable protective gas contacts. They may be fixed or alternatively mounted as an adjustable contact cartridge on a perforated strip. For fixed contacts, the contact intervals and their functions must be given. Plain contact cartridges can be subsequently adjusted for height. The function of make or break can then be altered by turning the cartridge through 180° degrees.
The permanent magnet built into the float switches the contacts when the level changes. The switching difference (hysteresis) is 4 mm. For temperature monitoring and regulation, thermal elements such as Pt100 and thermal contacts can be additionally incorporated.
The level controller is maintenance - free when nondeposit media are used.
For inductive loads, a protective circuit must be provided (free-wheeling diode/RC element).
The device must only be installed by specialists.

Max. viscosity SR45 - 320mm²/S
VR50 - 320mm²/S

Technical data

Switching tube	Stainless steel max. L=2000mm
Connection flange	NR70 / NR85 Stainless steel with flat seal
Nominal pressure	1 bar max.
Temperature of medium	100°C max.
Float	Hard-PU, type SR45 acero fino, type VR50
Level contacts	bistable make/break/changeover optional fixed or adjustable
Switching potential	Datasheet IN - GB - 003(004)
Thermal elements	thermal contact
Number of functions	max. 5 can be incorporated
Mounting position	vertical ± 30°
*Thermal contact	Sheet TR-GB-507

GOLDAMMER
REGELUNGSTECHNIK GMBH
SCHÖLLERSHEIDER STR. 15 PHONE (49) 2104/12093
P.O.BOX 10 02 17 FAX (49) 2104/12028
D-40802 METTMANN www.Goldammer-Regelungstechnik.com

NR 70 / 85 - V

Level regulator for tank insert

serial No.	Date
IN-GB- 106a	11/17

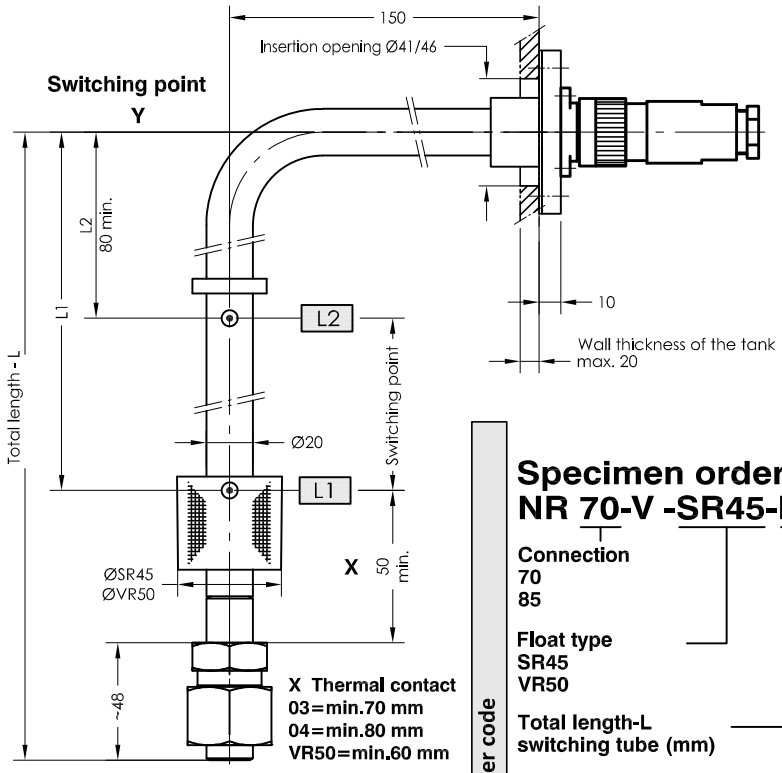

Order code

Specimen order

NR 70-V -SR45-L370-03-L1/300/S-T70Ö-M12-24V

Connection
70
85

Float type
SR45
VR50

Total length-L
switching tube (mm)

Level contact type
01 = fixed, plain
02 = fixed, changeover
03 = adjustable, plain
04 = adjustable, changeover

Switching point
L1-L5/mm from
sealing edge
Ö = break
S = make
W= changeover
Function with
increasing level

Pt100
Thermal contact
T10Ö
T40Ö
T50Ö
T60Ö (S)
T70Ö (S) **(Ö preferred)**
T80Ö (S)
T90Ö
(Indicate T1... - T2... for two thermal contacts)

Plug socket
connector
3+PE
DIN 43651
M12
3 pol. + PE
6 pol. + PE

Operating voltage
VDC 10-36 = 24V
VAC 10-230 = 230V

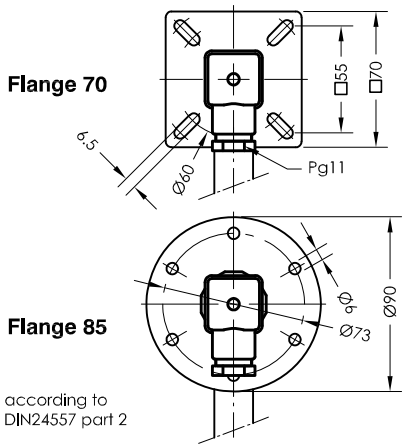

Connector variants

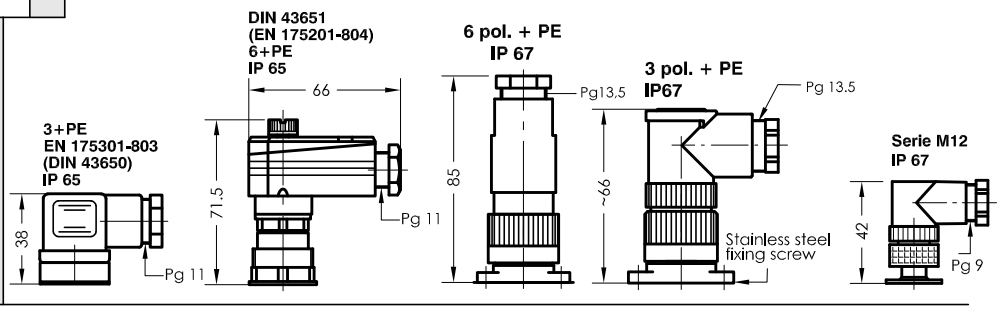

Technical data

Description

The level regulator type NR 70 / 85 - V for tank insert is a solenoid switch operating without contact with the function of monitoring and regulating liquid levels and temperatures.
The switching tube contains bistable protective gas contacts. They may be fixed or alternatively mounted as an adjustable contact cartridge on a perforated strip. For fixed contacts, the contact intervals and their functions must be given. Plain contact cartridges can be subsequently adjusted for height. The function of make or break can then be altered by turning the cartridge through 180° degrees.
The permanent magnet built into the float switches the contacts when the level changes. The switching difference (hysteresis) is 4 mm. For temperature monitoring and regulation, thermal elements such as Pt100 and thermal contacts can be additionally incorporated.
The level controller is maintenance - free when nondeposit media are used.
For inductive loads, a protective circuit must be provided (free-wheeling diode/RC element).
The device must only be installed by specialists.

Max. viscosity SR45 - 320mm²/S
VR50 - 320mm²/S

Technical data

Switching tube	Stainless steel max. L=2000mm
Connection flange	NR70 / NR85 stainless steel with flat seal
Nominal pressure	1 bar max.
Temperature of medium	100°C max.
Float	Hard-PU, type SR45 Stainless steel, type VR50
Level contacts	bistable make/break/changeover optional fixed or adjustable
Switching potential	Datasheet IN - GB - 003(004)
Thermal elements	Pt100, thermal contact
Number of functions	max. 5 can be incorporated
Mounting position	vertical ± 30°
*Thermal contact	Sheet TR-GB-507

GOLDAMMER
REGELUNGSTECHNIK GMBH
SCHÖLLERSHEIDER STR. 15 PHONE (49) 2104/12093
P.O.BOX 10 02 17 FAX (49) 2104/12028
D-40802 METTMANN www.Goldammer-Regelungstechnik.com

NR 85

Level regulator for tank insert

serial No.	Date
IN-GB- 108	04/19

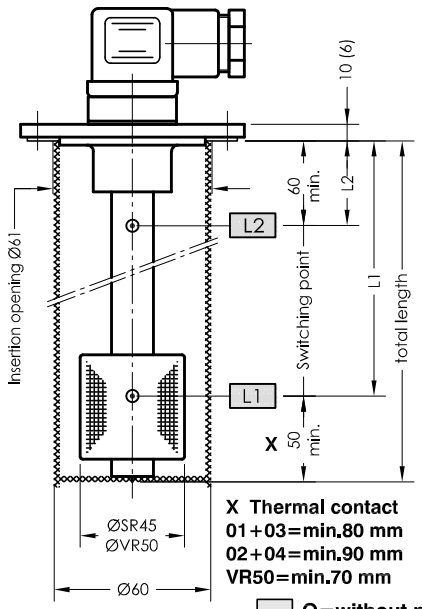

X Thermal contact
01+03=min.80 mm
02+04=min.90 mm
VR50=min.70 mm

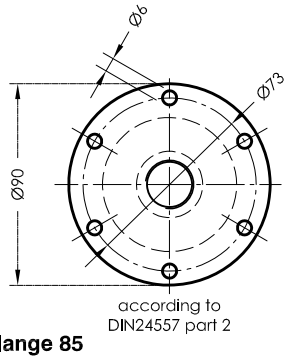

Flange 85

Specimen order

NR 85-O-SR45-L370-03-L1/300/S-T70Ö-MS-M12-24V

Order code

O=without protective tube
S=Protective tube

Float type
SR45
VR50

Total length-L
switching tube
(mm)
standard length
L= 250 L= 800
L= 370 L=1000
L= 500 L=1200

Level contact type
OK= cordless contact
(max. 1000mm)
01 = fixed, plain
02 = fixed, changeover
03 = adjustable, plain
04 = adjustable,
changeover

Switching point L1-L5/
mm from sealing edge
Ö = break
S = make
W= changeover
Function with
increasing level

Pt100
Thermal contact
T10Ö
T40Ö
T50Ö
T60Ö (S)
T70Ö (S) (Ö
T80Ö (S) preferred)
T90Ö
(Indicate T1... - T2...
for two thermal contacts)

Operating voltage
VDC 10-36 = 24V
VAC 10-230 = 230V
Plug socket connector
3+PE 6 pol.+PE
DIN 43651 3 pol.+PE
M12 HAN I
HAN II

Execution
MS = Brass
VA = Flange,
protective tube and
Switching tube
stainless steel
VAPA = Flange PA,
Switching tube
stainless steel

Connector variants

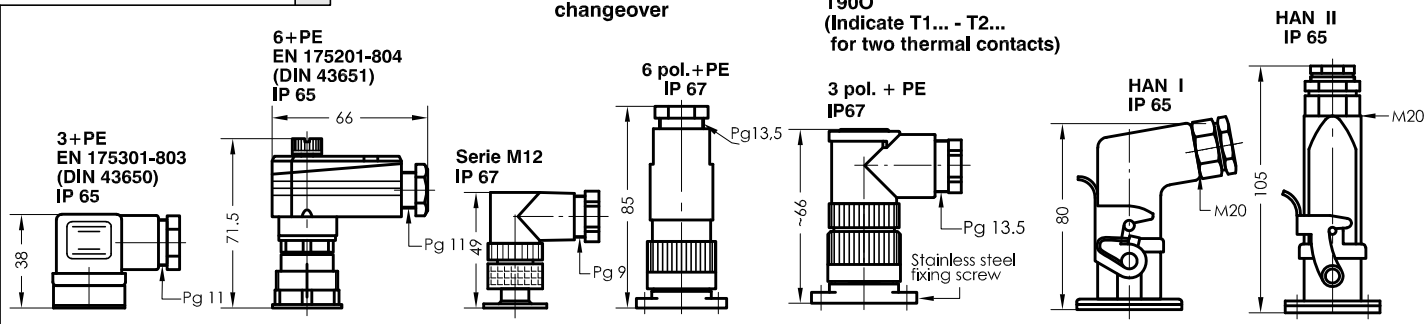

Technical data

Description

The level regulator type NR 85 for tank insert is a solenoid switch operating without contact with the function of monitoring and regulating liquid levels and temperatures.
The switching tube contains bistable protective gas contacts. They may be fixed or alternatively mounted as an adjustable contact cartridge on a perforated strip. For fixed contacts, the contact intervals and their functions must be given. Plain contact cartridges can be subsequently adjusted for height. The function of make or break can then be altered by turning the cartridge through 180° degrees.
The permanent magnet built into the float switches the contacts when the level changes. The switching difference (hysteresis) is 4 mm. For temperature monitoring and regulation, thermal elements such as Pt100 and thermal contacts can be additionally incorporated.
The level controller is maintenance - free when nondeposit media are used.
For inductive loads, a protective circuit must be provided (free-wheeling diode/RC element).

The device must only be installed by specialists.

Max. viscosity SR 40 / SR45 - 320mm²/S
VR50 - 320mm²/S

Technical data

Protective tube	Stainless steel
Switching tube	Brass or stainless steel max.L = 2000mm
Connection flange	Polyamide or stainless steel with flat seal
Nominal pressure	1 bar max.
Temperature of medium	100°C max.
Float	Hard -PU SR45 / stainless steel VR50
Level contacts	bistable make/break/changeover optional fixed or adjustable
Switching potential	Datasheet IN - GB - 003(004)
Thermal elements	Pt100, thermal contact
Number of functions	max. 5 can be incorporated
Mounting position	vertical ± 30°
*Thermal contact	Sheet TR-GB-507

GOLDAMMER
REGELUNGSTECHNIK GMBH
SCHÖLLERSHEIDER STR. 15 PHONE (49) 2104/12093
P.O.BOX 10 02 17 FAX (49) 2104/12028
D-40802 METTMANN www.Goldammer-Regelungstechnik.com

NR 85 - 150°C max.

Level regulator for tank insert

serial No.	Date
IN-GB- 108b	11/17

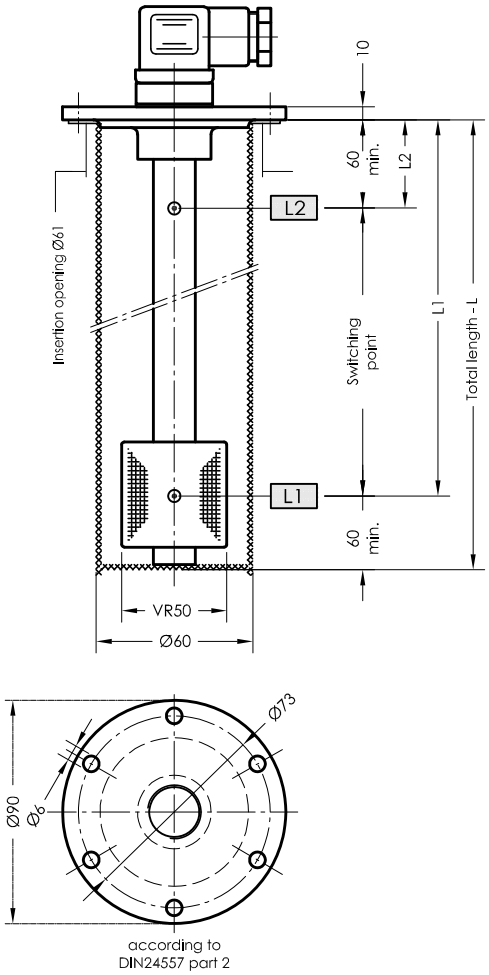

Order code

Specimen order

NR 85-S-VR50-L370-02-L1/300/S-VA-M12-24V-150°C

O=without protective tube
S=Protective tube

Float type
VR50

Total length-L
switching tube (mm)
standard length
L= 250 L= 800
L= 370 L=1000
L= 500 L=1200

Level contact type
02 = fixed, changeover

Operating voltage
VDC 10-36 = 24V
VAC 10-230 = 230V

Plug socket connector
3+PE
DIN 43651
M12
6 pol. + PE

Execution
VA = Flange, protective tube; Switching tube and float stainless steel

Switching point L1-L5/ mm from sealing edge
Ö = break
S = make
W= changeover
Function with increasing level

Connector variants

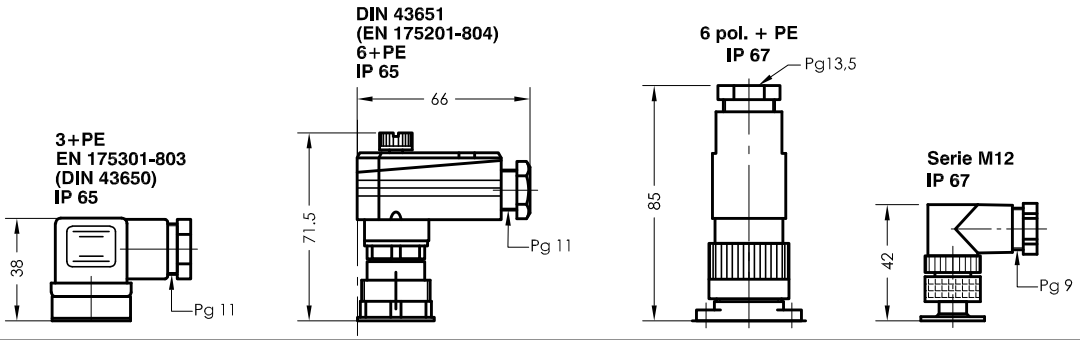

Technical data

Description

The level regulator type NR 85 - 150°C max. for tank insert is a solenoid switch operating without contact with the function of monitoring and regulating liquid levels and temperatures.
The switching tube contains bistable protective gas contacts, fixed in position.
For fixed contacts, the contact intervals and their functions must be given.
The permanent magnet built into the float switches the contacts when the level changes. The switching difference (hysteresis) is 4 mm. For temperature monitoring and regulation, thermal elements such as Pt100 can be additionally incorporated.
The level controller is maintenance - free when nondeposit media are used.
For inductive loads, a protective circuit must be provided (free-wheeling diode/RC element).
The device must only be installed by specialists.

Max. viscosity 320mm²/S

Technical data

Protective tube	Stainless steel
Switching tube	Stainless steel max.L = 2000mm
Connection flange	Stainless steel with flat seal Viton
Nominal pressure	10 bar max., float stainless steel VR50
Temperature of medium	150°C max.
Level contacts	bistable make/break/changeover
Switching potential	Datasheet IN - GB - 004
Thermal elements	Pt100
Number of functions	max. 5 can be incorporated
Mounting position	vertical ± 30°

GOLDAMMER
REGELUNGSTECHNIK GMBH
SCHÖLLERSHEIDER STR. 15 PHONE (49) 2104/12093
P.O.BOX 10 02 17 FAX (49) 2104/12028
D-40802 METTMANN www.Goldammer-Regelungstechnik.com

NR 95

Level regulator for tank insert

serial No.	Date
IN-GB- 111a	03/18

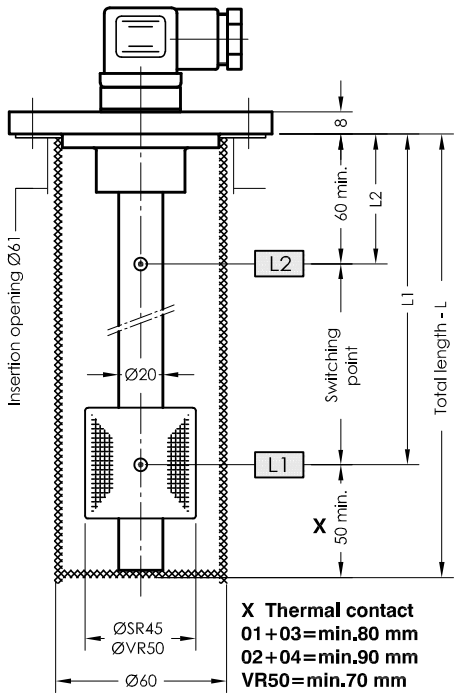

X Thermal contact
01+03=min.80 mm
02+04=min.90 mm
VR50=min.70 mm

Order code

Specimen order

NR 95-O-SR45-L300-03-L1/200/S-T70Ö-MS-M12-24V

O=without protective tube
S=Protective tube

Float type
SR45
VR50

Total length-L
switching tube (mm)

Level contact type
OK= cordless contact (max. 1000mm)
03 = adjustable, plain
04 = adjustable, changeover

Switching point L1-L5/
mm from sealing edge
Ö = break
S = make
W= changeover
Function with
increasing level

Pt100
Thermal contact
T10Ö
T40Ö
T50Ö
T60Ö (S)
T70Ö (S) (Ö preferred)
T80Ö (S)
T90Ö
(Indicate T1... - T2...
for two thermal contacts)

Execution
MS = Brass
VA = Flange,
Protective tube,
Switching tube
Stainless steel

Plug socket
connector
3+PE
DIN 43651
M12
3 pol. + PE
6 pol. + PE

Operating voltage
VDC 10-36 = 24V
VAC 10-230 = 230V

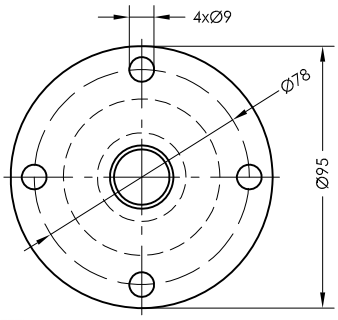

Connector variants

3+PE
EN 175301-803
(DIN 43650)
IP 65

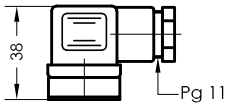

DIN 43651
(EN 175201-804)
6+PE
IP 65

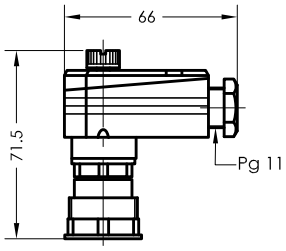

6 pol. + PE
IP 67

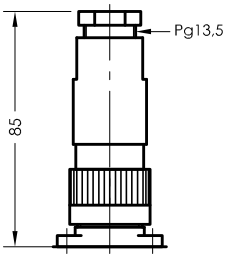

3 pol. + PE
IP67

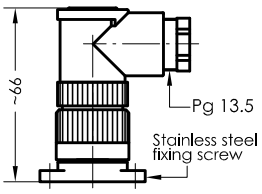

Serie M12
IP 67

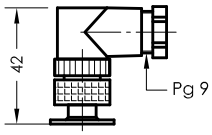

Technical data

Description

The level regulator type NR 95 for tank insert is a solenoid switch operating without contact with the function of monitoring and regulating liquid levels and temperatures.
The switching tube contains bistable protective gas contacts, mounted as an adjustable contact cartridge on a perforated strip. Plain contact cartridges can be subsequently adjusted for height. The function of make or break can then be altered by turning the cartridge through 180° degrees.
The permanent magnet built into the float switches the contacts when the level changes. The switching difference (hysteresis) is 4 mm. For temperature monitoring and regulation, thermal elements such as Pt100 and thermal contacts can be additionally incorporated.
The level controller is maintenance-free when nondeposit media are used.
For inductive loads, a protective circuit must be provided (free-wheeling diode/RC element).
The device must only be installed by specialists.

Max. viscosity SR45 - 320mm²/S
VR50 - 320mm²/S

Technical data

Protective tube	Stainless steel
Switching tube	Brass or stainless steel max.L = 3000mm
Connection flange	Stainless steel with flat seal
Nominal pressure	1 bar max. - float hard-PU SR45 10 bar max. - float stainless steel VR50
Temperature of medium	100°C max.
Float	Hard PU - SR45 / stainless steel VR50
Level contacts	bistable make/break/changeover adjustable
Switching potential	Datasheet IN - GB - 003(004)
Thermal elements	Pt100, thermal contact
Number of functions	max. 5 can be incorporated
Mounting position	vertical ± 30°
*Thermal contact	Sheet TR-GB-507

GOLDAMMER
REGELUNGSTECHNIK GMBH
SCHÖLLERSHEIDER STR. 15 PHONE (49) 2104/12093
P.O.BOX 10 02 17 FAX (49) 2104/12028
D-40802 METTMANN www.Goldammer-Regelungstechnik.com

NR 1" - 11/4"

Level regulator for tank insert

serial No.	Date
IN-GB- 112	10/18

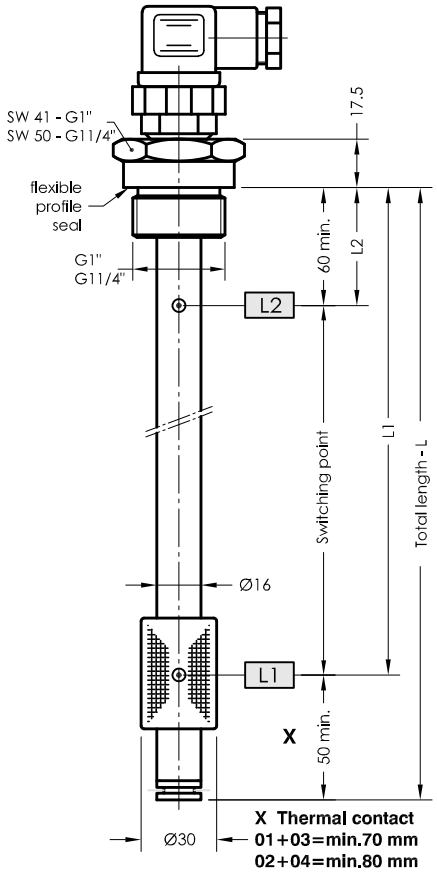

Order code

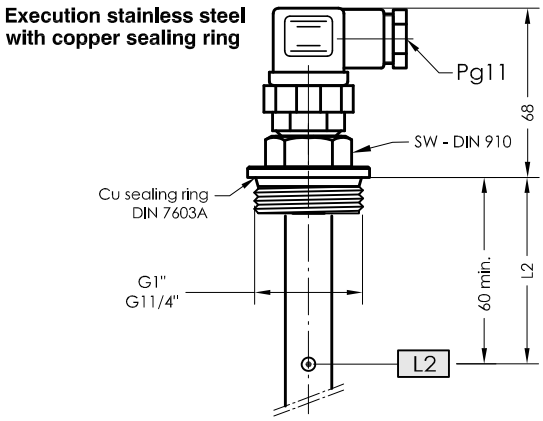

Specimen order

NR 1" -SR30-L370-03-L1/300/S-T70Ö-MS-M12-24V

Tank connection:
1"
11/4"

Float type
SR30
EL SR30

Total length-L
switching tube (mm)
Standard length
L=250 L=800
L=370 L=1000
L=500

Level contact type
OK= Cordless contuct (max. 500mm)
01 = fixed, plain
02 = fixed, changeover
03 = adjustable, plain
04 = adjustable, changeover
(max. 2 functions)

Switching point L1-L3/
mm from sealing edge
Ö = break
S = make
W= changeover
Function with
increasing level

Pt100
Thermal contact
T10Ö
T40Ö
T50Ö
T60Ö (S)
T70Ö (S) (Ö preferred)
T80Ö (S)
T90Ö
(Indicate T1... - T2...
for two thermal
contacts)

Execution
MS = Brass
VA = Connectionthread,
Switching tube
stainless steel

Operating voltage
VDC 10-36 = 24V
VAC 10-230 = 230V

Plug socket connector
3+PE
DIN 43651
3 pol. + PE
6 pol. + PE
M12

Connector variants

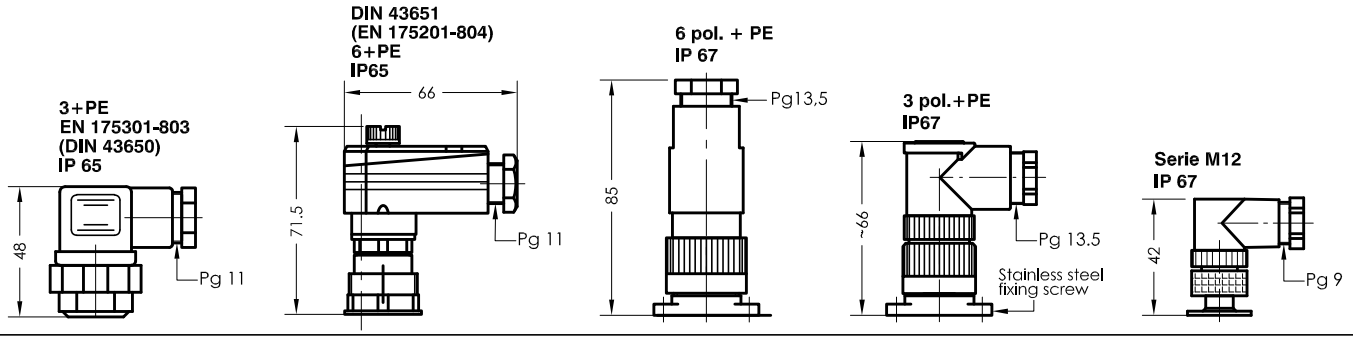

Technical data

Description

The level regulator type NR 1" - 11/4" for tank insert is a solenoid switch operating without contact with the function of monitoring and regulating liquid levels and temperatures.
The switching tube contains bistable protective gas contacts. They may be fixed or alternatively mounted as an adjustable contact cartridge on a perforated strip. For fixed contacts, the contact intervals and their functions must be given. Plain contact cartridges can be subsequently adjusted for height. The function of make or break can then be altered by turning the cartridge through 180° degrees.
The permanent magnet built into the float switches the contacts when the level changes. The switching difference (hysteresis) is 4 mm. For temperature monitoring and regulation, thermal elements such as Pt100 and thermal contacts can be additionally incorporated.
The level controller is maintenance - free when nondeposit media are used.
For inductive loads, a protective circuit must be provided (free-wheeling diode/RC element).
The device must only be installed by specialists.

Max. viscosity 150mm²/S

Technical data

Switching tube	Brass / Stainless steel, max.L = 1000r
Connecting thread	Brass / Stainless steel, G1", SW41 G11/4", SW50
Nominal pressure	1 bar max.
Temperature of medium	100°C max.
Float	Hard-PU, type SR30, Ceramic, type EL SR30
Level contacts	bistable make/break/changeover optional fixed or adjustable
Switching potential	Datasheet IN - GB - 003(004)
Thermal elements	Pt100, thermal contact
Number of functions	max. 3 can be incorporated
Mounting position	vertical ± 30°
*Thermal contact	Sheet TR-GB-507

GOLDAMMER
REGELUNGSTECHNIK GMBH
SCHÖLLERSHEIDER STR. 15 PHONE (49) 2104/12093
P.O.BOX 10 02 17 FAX (49) 2104/12028
D-40802 METTMANN www.Goldammer-Regelungstechnik.com

NR 1" - 11/4" - 150°C max.

Level regulator for tank insert

serial No.	Date
IN-GB- 112b	11/17

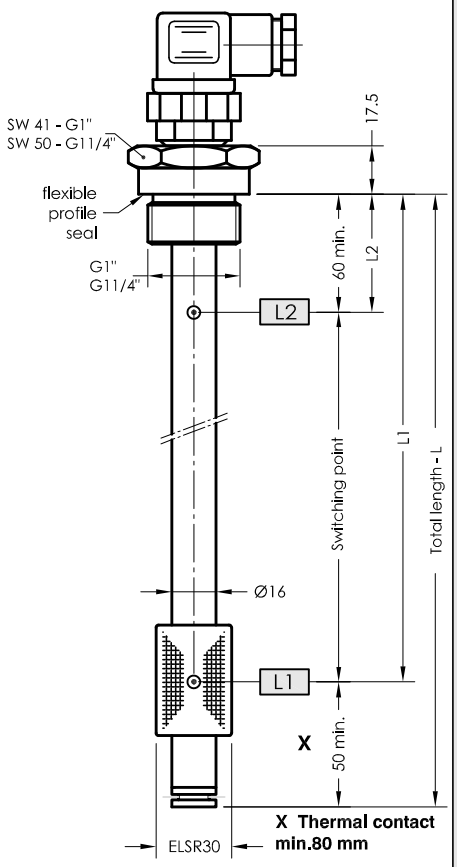

Order code

Specimen order

NR 1" -ELSR30-L370-02-L1/300/S-T70Ö-M12-24V-150°C

Tank connection:
1"
11/4"

Float type
EL SR30

Total length-L switching tube (mm)
Standard length
L=250 L=800
L=370 L=1000
L=500

Level contact type
02 = fixed, changeover

Switching point L1-L3/ mm from sealing edge
Ö = break
S = make
W= changeover
Function with increasing level

Operating voltage
VDC 10-36 = 24V
VAC 10-230 = 230V

Plug socket connector
3+PE
DIN 43651
M12
3 pol. + PE
6 pol. + PE

Pt100
Thermal contact
T10Ö
T40Ö
T50Ö
T60Ö (S)
T70Ö (S) (Ö preferred)
T80Ö (S)
T90Ö
(Indicate T1... - T2... for two thermal contacts)

Connector variants

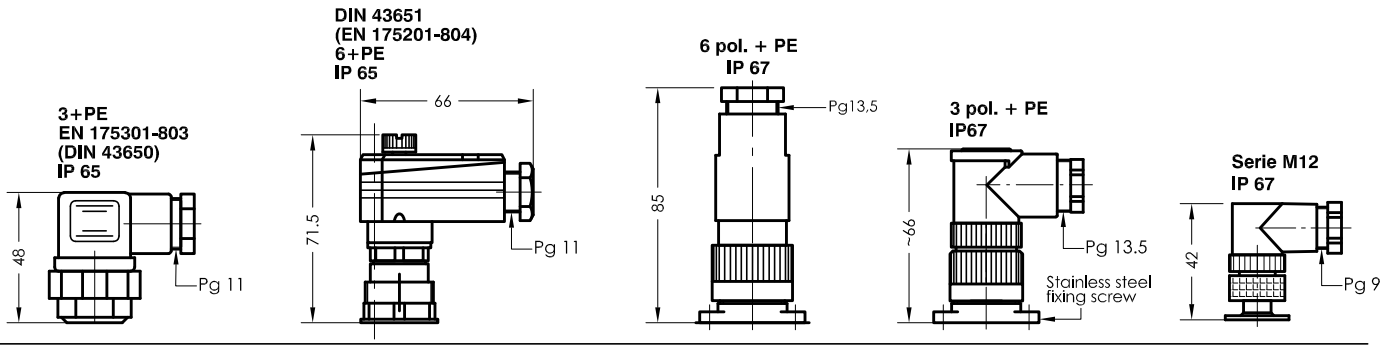

Technical data

Description

The level regulator type NR 1" - 11/4" - 150°C max. for tank insert is a solenoid switch operating without contact with the function of monitoring and regulating liquid levels and temperatures.
The switching tube contains fixed arranged bistable protective gas contacts. For fixed contacts, the contact intervals and their functions must be given.
The permanent magnet built into the float switches the contacts when the level changes. The switching difference (hysteresis) is 4 mm. For temperature monitoring and regulation, thermal elements such as Pt100 and thermal contacts can be additionally incorporated.
The level controller is maintenance - free when nondeposit media are used.
For inductive loads, a protective circuit must be provided (free-wheeling diode/RC element).
The device must only be installed by specialists.

Max. viscosity 150mm²/S

Technical data

Switching tube	Stainless steel, max.L = 1000mm
Connecting thread	Stainless steel G1", SW41 Stainless steel G11/4", SW50 with seal Viton
Nominal pressure	10 bar max.
Temperature of medium	150°C max.
Float	Ceramic,type EL SR30
Level contacts	bistable make/break/changeover
Switching potential	Datasheet IN - GB - 004
Thermal elements	Pt100, thermal contact
Number of functions	max. 3 can be incorporated
Mounting position	vertical ± 30°
*Thermal contact	Sheet TR-GB-507

GOLDAMMER
REGELUNGSTECHNIK GMBH
SCHÖLLERSHEIDER STR. 15 PHONE (49) 2104/12093
P.O.BOX 10 02 17 FAX (49) 2104/12028
D-40802 METTMANN www.Goldammer-Regelungstechnik.com

NR M30x1.5

Level regulator for tank insert

serial No.	Date
IN-GB- 112c	11/17

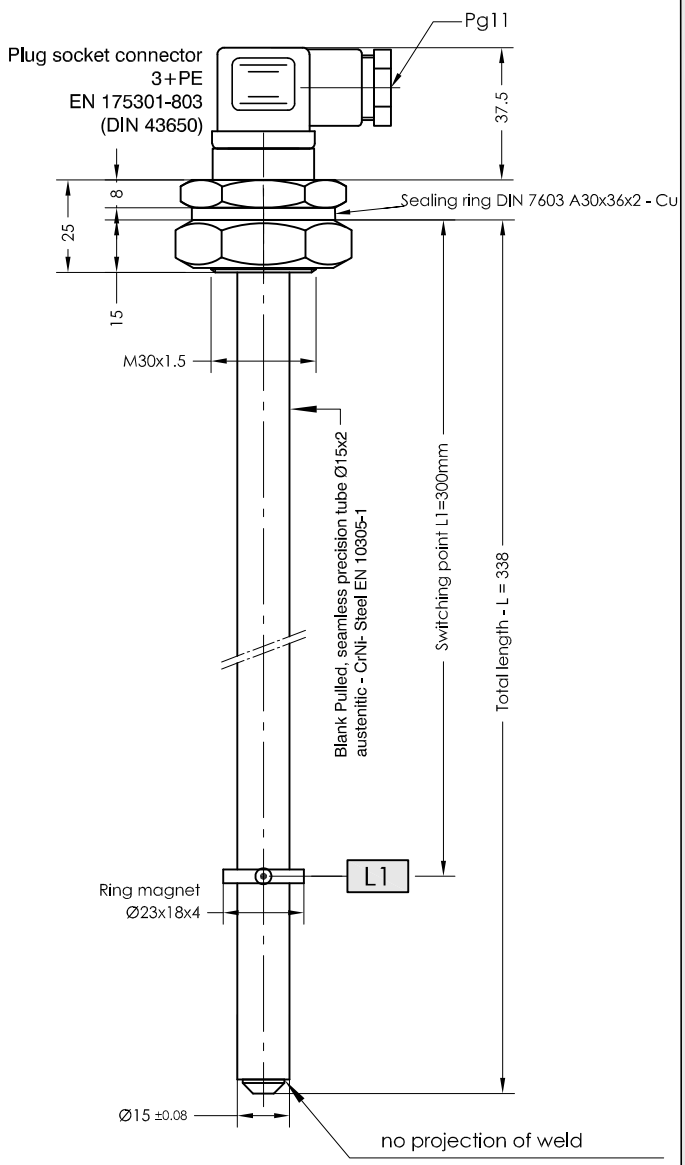

Order code

Specimen order

M30x1.5 -L338-02-L1/300/W-230V

Total-lenght-L switching tube (mm)

Level contact type
02 = fixed, changeover

Switching point L mm from sealing edge
W= changeover
Function with increasing level

Technical data

Description

The level regulator type M30x1,5 for tank insert is a solenoid switch operating without contact and is used as supply for the level control / minimal charging level signaling of the customers-drawing V300039_2.
The switching tube contains a fixed protective gas contact.
The annular magnet will be mounted in the magnet socket by the customer.
The permanent magnet built into the magnet socket switches the contact when the level changes.
For inductive loads, a protective circuit must be provided (free-wheeling diode/RC element).

The device must only be installed by specialists.

Technical data

Switching tube	VA Ø15, max. L = 1000mm
Connecting thread	Al M30x1,5, SW41
Hexagon counter nut	galv. steel M30x1,5 DIN 439-04-SW46
Nominal pressure	1 bar max.
Temperature of medium	100°C max.
Annular magnet	hard ferrite 8/22
Level contacts	changeover fixed arranged
Plug socket connector	DIN 43650 IP65
Switching current	Datasheet IN - GB - 004
Switching potential	Datasheet IN - GB - 004
Mounting position	vertical ± 30°

GOLDAMMER
REGELUNGSTECHNIK GMBH
SCHÖLLERSHEIDER STR. 15 PHONE (49) 2104/12093
P.O.BOX 10 02 17 FAX (49) 2104/12028
D-40802 METTMANN www.Goldammer-Regelungstechnik.com

NR 1½"

Level regulator for tank insert

serial No.	Date
IN-GB- 114	10/18

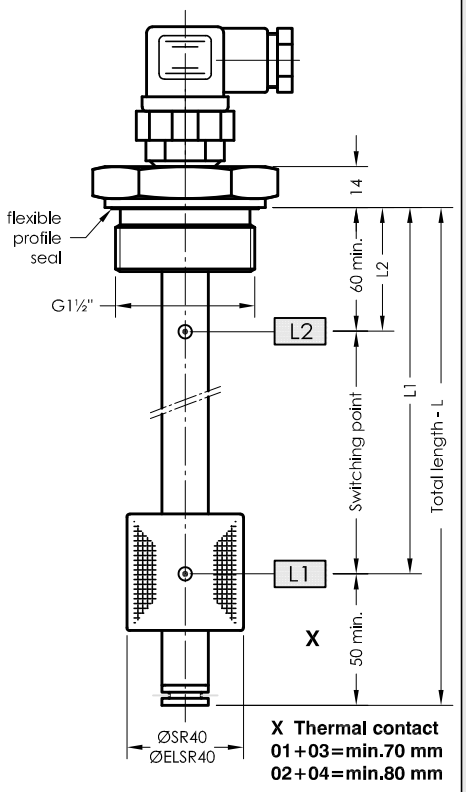

Order code

Specimen order

NR1½" -SR40-L370-03-L1/300/S-T70Ö-VA-M12-24V

Float type
SR40
ELSR40

Total length-L switching tube (mm)
Standard length
L=250 L=800
L=370 L=1000
L=500 L=1200

Level contact type
OK= cordless contact (max. 500mm)
01 = fixed, plain
02 = fixed, changeover
03 = adjustable, plain
04 = adjustable, changeover (max. 2 functions)

Switching point L1-L3/ mm from sealing edge
Ö = break
S = make
W= changeover
Function with increasing level

Pt100 Thermal contact
T10Ö
T40Ö
T50Ö
T60Ö (S)
T70Ö (S)
T80Ö (S)
T90Ö
(Ö preferred)
(Indicate T1... - T2... for two thermal contacts)

Execution
MS = Brass
VA = Flange, Switching tube Stainless steel

Plug socket connector
3+PE
DIN 43651
M12
3 pol. + PE
6 pol. + PE

Operating voltage
VDC 10-36 = 24V
VAC 10-230 = 230V

Connector variants

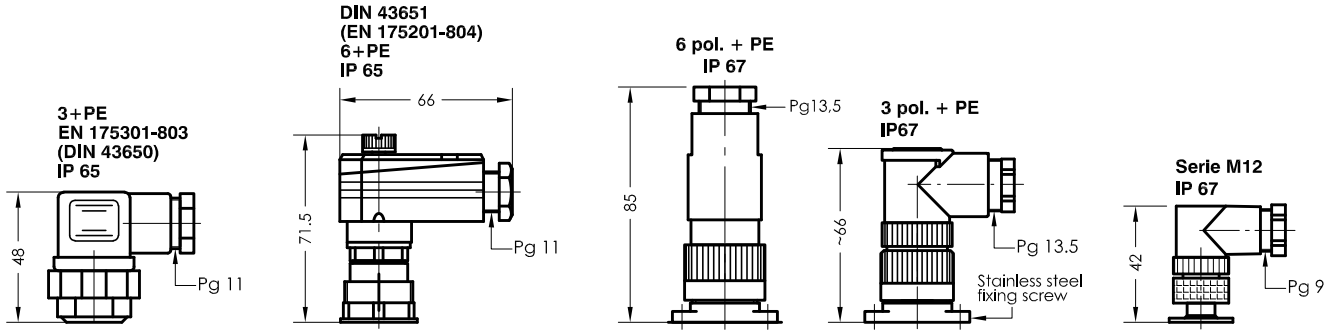

Technical data

Description

The level regulator type NR 1½" for tank insert is a solenoid switch operating without contact with the function of monitoring and regulating liquid levels and temperatures.
The switching tube contains bistable protective gas contacts. They may be fixed or alternatively mounted as an adjustable contact cartridge on a perforated strip. For fixed contacts, the contact intervals and their functions must be given. Plain contact cartridges can be subsequently adjusted for height. The function of make or break can then be altered by turning the cartridge through 180° degrees.
The permanent magnet built into the float switches the contacts when the level changes. The switching difference (hysteresis) is 4 mm. For temperature monitoring and regulation, thermal elements such as Pt100 and thermal contacts can be additionally incorporated.
The level controller is maintenance - free when nondeposit media are used.
For inductive loads, a protective circuit must be provided (free-wheeling diode/RC element).
The device must only be installed by specialists.

Max. viscosity 320mm²/S

Technical data

Switching tube	Brass or stainless steel max.L = 2000mm
Connection	Stainless steel G1½", SW55
Nominal pressure	1 bar max.
Temperature of medium	100°C max.
Float	Hard-PU, type SR40 / ELSR40
Level contacts	bistable make/break/changeover optional fixed or adjustable
Switching potential	Datasheet IN - GB - 003(004)
Thermal elements	Pt100, thermal contact
Number of functions	max. 3 can be incorporated
Mounting position	vertical ± 30°
*Thermal contact	Sheet TR-GB-507

GOLDAMMER
REGELUNGSTECHNIK GMBH
SCHÖLLERSHEIDER STR. 15 PHONE (49) 2104/12093
P.O.BOX 10 02 17 FAX (49) 2104/12028
D-40802 METTMANN www.Goldammer-Regelungstechnik.com

NR 2"

Level regulator for tank insert

serial No.	Date
IN-GB- 115	10/18

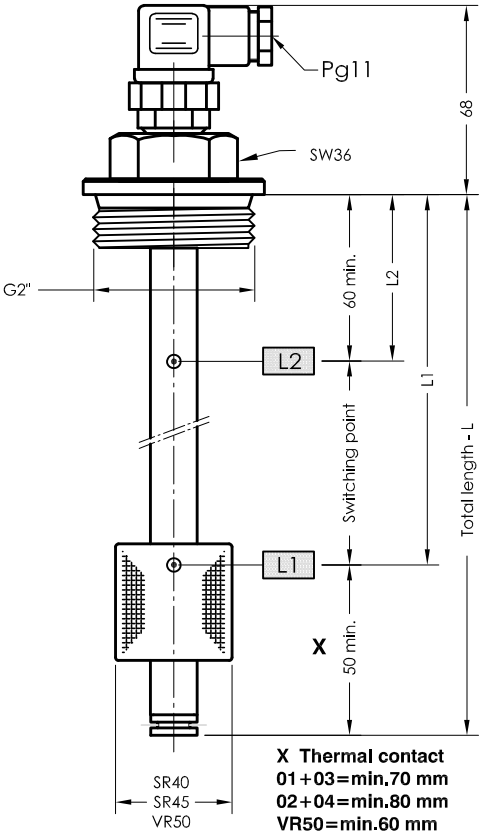

Order code

Specimen order

NR2"-SR40-L370-03-L1/300/S-T70Ö-MS-M12-24V

Float type
SR40
SR45
VR50

Total length-L switching tube (mm)
Standard length
L=250 L=800
L=370 L=1000
L=500 L=1200

Level contact type
OK= cordless contact (max. 500mm)
01 = fixed, plain
02 = fixed, changeover
03 = adjustable, plain
04 = adjustable, changeover (max. 2 functions)

Switching point L1-L3/ mm from sealing edge
Ö = break
S = make
W= changeover
Function with increasing level

Pt100
Thermal contact
T10Ö
T40Ö
T50Ö
T60Ö (S)
T70Ö (S) (Ö preferred)
T80Ö (S)
T90Ö
(Indicate T1... - T2... for two thermal contacts)

Execution
MS = Brass
VA = Flange, Switching tube Stainless steel

Plug socket connector
3+PE
DIN 43651
3 pol. + PE
6 pol. + PE
M12

Operating voltage
VDC 10-36 = 24V
VAC 10-230 = 230V

Connector variants

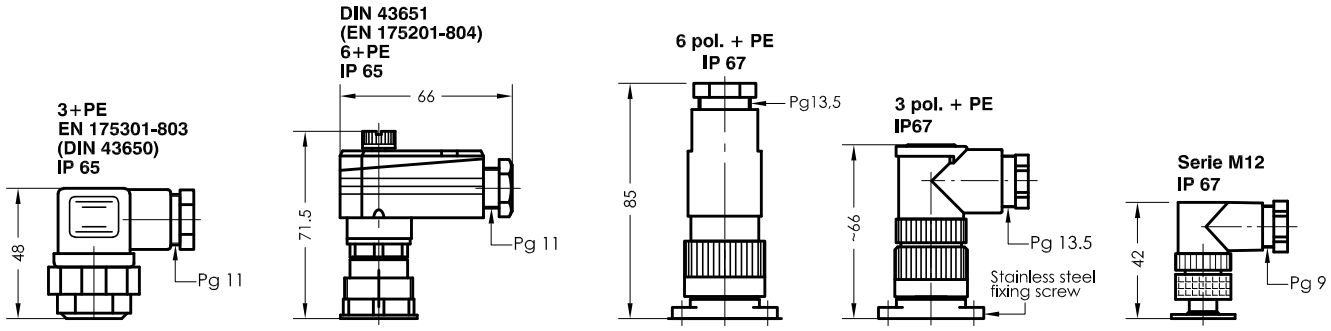

Technical data

Description

The level regulator type NR 2" for tank insert is a solenoid switch operating without contact with the function of monitoring and regulating liquid levels and temperatures.
The switching tube contains bistable protective gas contacts.
They may be fixed or alternatively mounted as an adjustable contact cartridge on a perforated strip. For fixed contacts, the contact intervals and their functions must be given. Plain contact cartridges can be subsequently adjusted for height. The function of make or break can then be altered by turning the cartridge through 180° degrees.
The permanent magnet built into the float switches the contacts when the level changes. The switching difference (hysteresis) is 4 mm.
For temperature monitoring and regulation, thermal elements such as Pt100 and thermal contacts can be additionally incorporated.
The level controller is maintenance - free when nondeposit media are used.
For inductive loads, a protective circuit must be provided (free-wheeling diode/RC element).
The device must only be installed by specialists.

Max. viscosity SR40 / SR45 - 320mm²/S
VR50 - 320mm²/S

Technical data

Switching tube	Brass or stainless steel L max. = 2000mm
Connection	galv. Steel or stainless steel G2", SW70 with ring seal Cu - DIN 7603
Nominal pressure	1 bar max., float hard-PU SR40 / SR45 10 bar max.,stainless steel VR50
Temperature of medium	100°C max.
Float	Hard-PU, type SR40 / SR45 / Stainless steel VR50
Level contacts	bistable make/break/changeover optional fixed or adjustable
Switching potential	Datasheet IN - GB - 003(004)
Thermal elements	Pt100, thermal contact
Number of functions	max. 3 can be incorporated
Mounting position	vertical ± 30°
*Thermal contact	Sheet TR-GB-507

GOLDAMMER
REGELUNGSTECHNIK GMBH
SCHÖLLERSHEIDER STR. 15 PHONE (49) 2104/12093
P.O.BOX 10 02 17 FAX (49) 2104/12028
D-40802 METTMANN www.Goldammer-Regelungstechnik.com

NR 2"

Level regulator for tank insert

serial No. Date
IN-GB- 115a 05/18

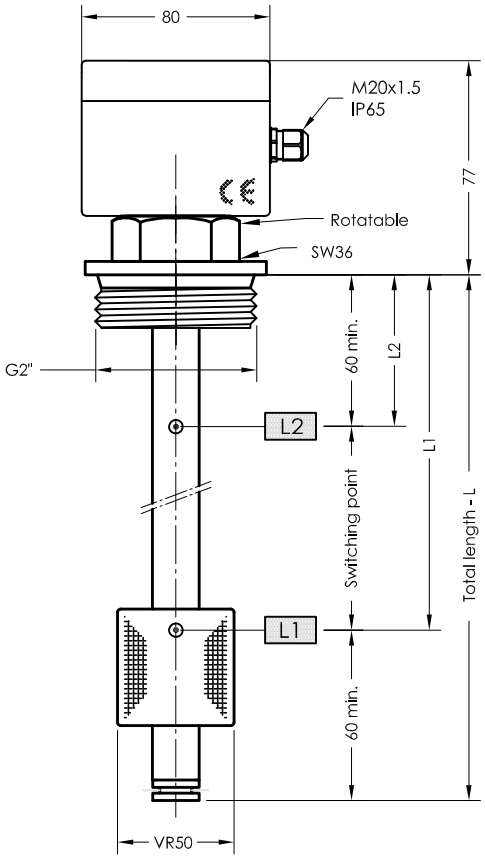

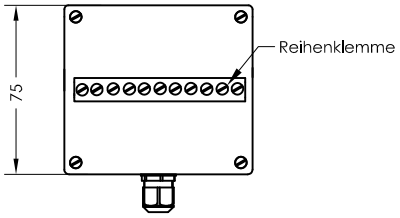

Order code

Specimen order

NR2"-VR50-L370-03-L1/300/S-T70Ö-VA-24V

Float type
VR50

Total length-L
switching tube (mm)

Level contact type
01 = fixed, plain
02 = fixed, changeover
03 = adjustable, plain
04 = adjustable, changeover

Switching point L1-L4/
mm from sealing edge
Ö = break
S = make
W= changeover
Function with increasing level

Pt100
Thermal contact
T10Ö
T40Ö
T50Ö
T60Ö (S)
T70Ö (S) **(Ö preferred)**
T80Ö (S)
T90Ö
(Indicate T1... - T2...
for two thermal contacts)

Operating voltage
VDC 10-36 = 24V
VAC 10-230 = 230V

Execution
VA = Flange, Switching tube and float stainless steel

Technical data

Description

The level regulator type NR 2" for tank insert is a solenoid switch operating without contact with the function of monitoring and regulating liquid levels and temperatures.
The switching tube contains bistable protective gas contacts.
They may be fixed or alternatively mounted as an adjustable contact cartridge on a perforated strip. For fixed contacts, the contact intervals and their functions must be given. Plain contact cartridges can be subsequently adjusted for height. The function of make or break can then be altered by turning the cartridge through 180° degrees.
The permanent magnet built into the float switches the contacts when the level changes. The switching difference (hysteresis) is 4 mm.
For temperature monitoring and regulation, thermal elements such as Pt100 and thermal contacts can be additionally incorporated.
The level controller is maintenance - free when nondeposit media are used.
For inductive loads, a protective circuit must be provided (free-wheeling diode/RC element).
The device must only be installed by specialists.

Max. viscosity VR50 - 320mm²/S

Technical data

Switching tube	Stainless steel L max. = 6000mm
Connection	Stainless steel G2", with ring seal Cu - DIN 7603
Nominal pressure	10 bar max.,stainless steel VR50
Temperature of medium	-10°C-100°C max.
Float	Stainless steel VR50
Level contacts	bistable make/break/changeover optional fixed or adjustable
Switching potential	Datasheet IN - GB - 003(004)
Thermal elements	Pt100, thermal contact
Installed position	Vertical ± 30°
Housing, with compact terminals	Aluminium 80x75x57 - IP65

GOLDAMMER
REGELUNGSTECHNIK GMBH
SCHÖLLERSHEIDER STR. 15 PHONE (49) 2104/12093
P.O.BOX 10 02 17 FAX (49) 2104/12028
D-40802 METTMANN www.Goldammer-Regelungstechnik.com

NR 2" - 150°C max.

Level regulator for tank insert

serial No.	Date
IN-GB- 115c	03/18

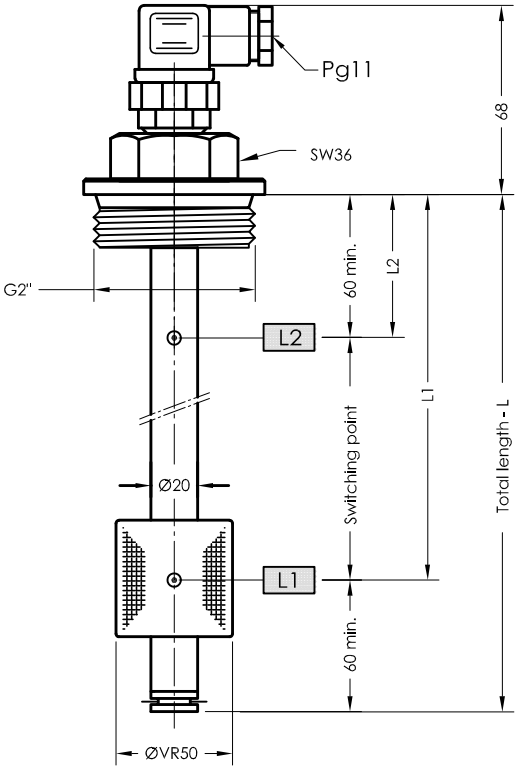

Order code

Specimen order

NR2"-VR50-L370-02-L1/300/S-M12-24V-150°C

Float type
VR50

Total length-L
switching tube (mm)
Standard length
L=250 L=800
L=370 L=1000
L=500 L=1200

Level contact type
02 = fixed, changeover

Operating voltage
VDC 10-36 = 24V
VAC 10-230 = 230V

Plug socket connector
3+PE
DIN 43651
6 pol. + PE
3 pol. + PE
M12

Switching point L1-L5/
mm from sealing edge
Ö = break
S = make
W= changeover
Function with
increasing level

Connector variants

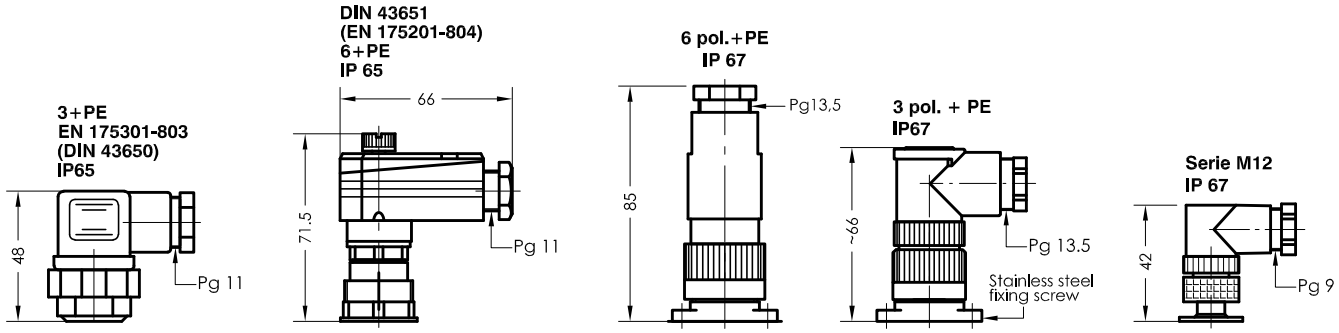

Technical data

Description

The level regulator type NR 2" - 150°C max. for tank insert is a solenoid switch operating without contact with the function of monitoring and regulating liquid levels and temperatures.
The switching tube contains bistable protective gas contacts, fixed in position.
For fixed contacts, the contact intervals and their functions must be given.
The permanent magnet built into the float switches the contacts when the level changes. The switching difference (hysteresis) is 4 mm. For temperature monitoring and regulation, thermal elements such as Pt100 can be additionally incorporated.
The level controller is maintenance - free when nondeposit media are used.
For inductive loads, a protective circuit must be provided (free-wheeling diode/RC element).

The device must only be installed by specialists.

Max. viscosity 320mm²/S

Technical data

Switching tube	Stainless steel, max.L = 3000mm
Connection	galv. Steel G2", SW70, with ring seal Cu, DIN 7603
Nominal pressure	10 bar max. - stainless steel VR50
Temperature of medium	150°C max.
Level contacts	bistable make/break/changeover
Switching current	Datasheet IN - GB - 004
Switching pontatial	Datasheet IN - GB - 004
Number of functions	max. 5 can be incorporated
Mounting position	vertical ± 30°

GOLDAMMER
REGELUNGSTECHNIK GMBH
SCHÖLLERSHEIDER STR. 15 PHONE (49) 2104/12093
P.O.BOX 10 02 17 FAX (49) 2104/12028
D-40802 METTMANN www.Goldammer-Regelungstechnik.com

NR 1/120

Level regulator for tank insert

serial No.	Date
IN-GB- 116	11/17

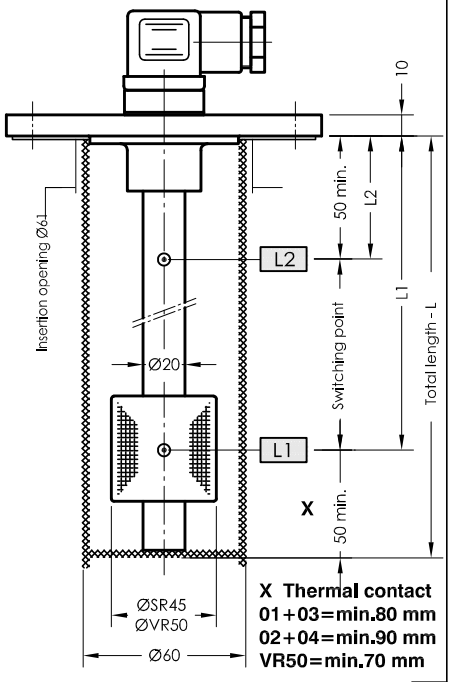

Specimen order

NR 1/120-O-SR45-L370-03-L1/300/S-T70Ö-MS-M12-24V

O=without protective tube
S=Protective tube

Float type
SR45
VR50

Total length-L
switching tube (mm)

Level contact type
OK= cordless contact (max. 1000mm)
01 = fixed, plain
02 = fixed, changeover
03 = adjustable, plain
04 = adjustable, changeover

Switching point L1-L5/
mm from sealing edge
Ö = break
S = make
W= changeover
Function with
increasing level

Pt100
Thermal contact
T10Ö
T40Ö
T50Ö
T60Ö (S)
T70Ö (S) (Ö preferred)
T80Ö (S)
T90Ö
(Indicate T1... - T2...
for two thermal contacts)

Plug socket
connector
3+PE
DIN 43651
6 pol. + PE
M12
3 pol. + PE

Operating voltage
VDC 10-36 = 24V
VAC 10-230 = 230V

Execution
MS = Brass
VA = Flange,
Protective tube,
Switching tube
and float
stainless steel

Order code

Connector variants

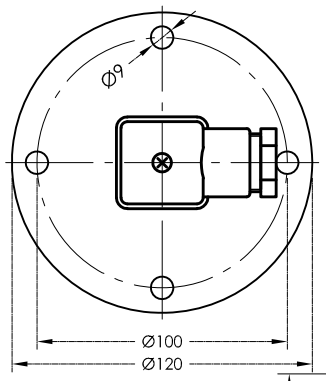

3+PE
EN 175301-803
(DIN 43650)
IP 65

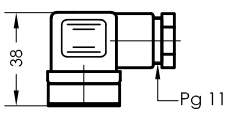

DIN 43651
(EN 175201-804)
6+PE
IP 65

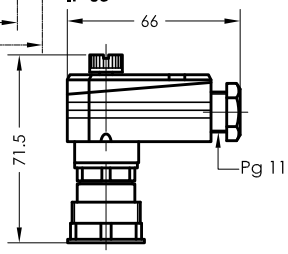

6 pol. + PE
IP 67

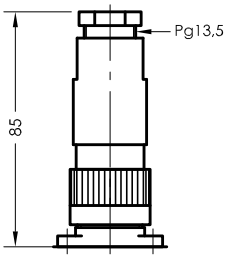

Serie M12
IP 67

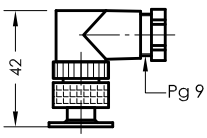

3 pol. + PE
IP67

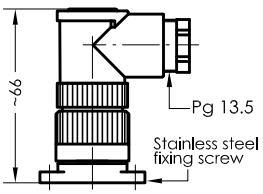

Technical data

Description

The level regulator type NR 1/120 for tank insert is a solenoid switch operating without contact with the function of monitoring and regulating liquid levels and temperatures.
The switching tube contains bistable protective gas contacts, mounted as an adjustable contact cartridge on a perforated strip. Plain contact cartridges can be subsequently adjusted for height. The function of make or break can then be altered by turning the cartridge through 180° degrees.
The permanent magnet built into the float switches the contacts when the level changes. The switching difference (hysteresis) is 4 mm. For temperature monitoring and regulation, thermal elements such as Pt100 and thermal contacts can be additionally incorporated.

The level controller is maintenance-free when nondeposit media are used.
For inductive loads, a protective circuit must be provided (free-wheeling diode/RC element).
The device must only be installed by specialists.

Max. viscosity SR45 - 320mm²/S
VR50 - 320mm²/S

Technical data

Protective tube	Stainless steel
Switching tube	Brass or stainless steel max.L = 3000mm
Connection flange	Aluminium or stainless steel with flat seal
Nominal pressure	1 bar max. - float hard-PU SR45 10 bar max. - float stainless steel VR50
Temperature of medium	100°C max.
Level contacts	bistable make/break/changeover adjustable
Switching potential	Datasheet IN - GB - 003(004)
Thermal contact	Pt100, thermal contact
Number of functions	max. 5 can be incorporated
Mounting position	vertical ± 30°
*Thermal contact	Sheet TR-GB-507

GOLDAMMER
REGELUNGSTECHNIK GMBH
SCHÖLLERSHEIDER STR. 15 PHONE (49) 2104/12093
P.O.BOX 10 02 17 FAX (49) 2104/12028
D-40802 METTMANN www.Goldammer-Regelungstechnik.com

NR 6/32

Level regulator for tank insert

serial No.	Date
IN-GB- 119	04/19

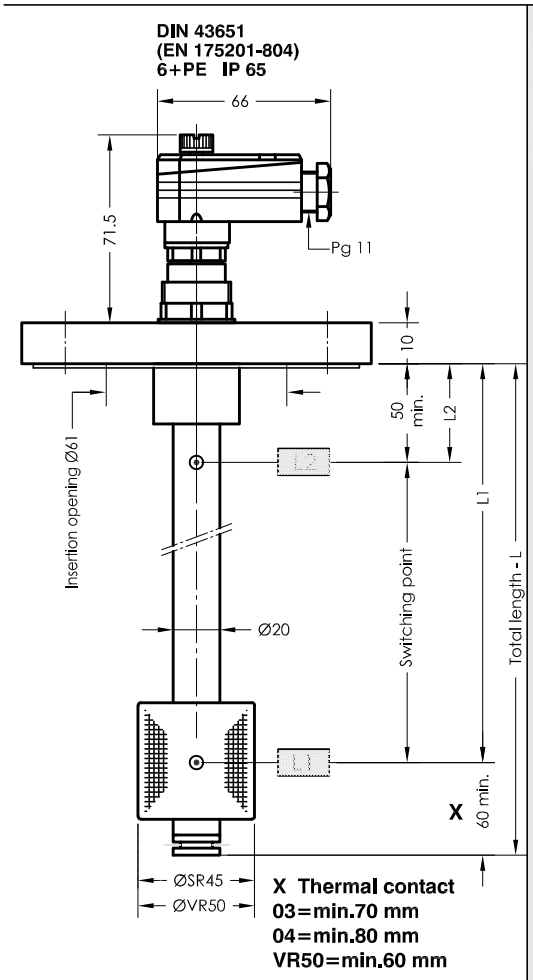

Order code

Specimen order

NR 6/32-VR50-L800-03-L1/700/S-T70Ö-VA-6+PE-24V

Float type
SR45
VR50

Total length-L
switching tube (mm)

Level contact type
OK= cordless contact (max. 1000mm)
03 = adjustable, plain
04 = adjustable, changeover

Switching point L1-L6/
mm from sealing edge

Ö = break
S = make
W= changeover
Function with
increasing level

Pt100
Thermal contact
T40Ö
T50Ö
T60Ö (S)
T70Ö (S)
T80Ö (S)
T90Ö
(Ö preferred)
(Indicate
T1... - T2...
for two thermal
contacts)

Execution
MS = Brass
VA = Flange,
Switching tube
and float
stainless steel

Plug socket
connector
DIN 43651
6 pol. + PE
AG

Operating voltage
VDC 10-36 = 24V
VAC 10-230 = 230V

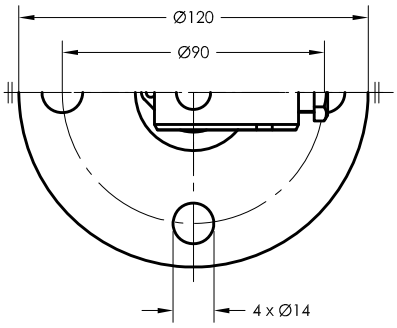

Connector variants

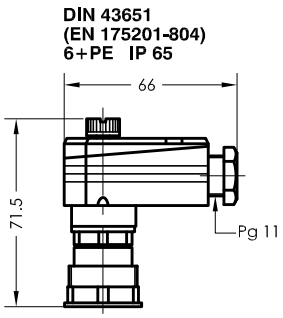

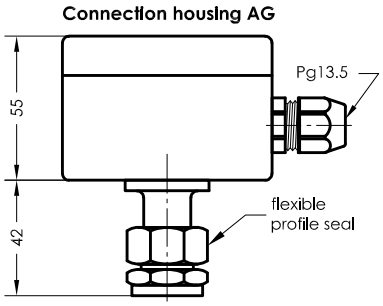

Technical data

Description

The level regulator type NR 6/32 for tank insert is a solenoid switch operating without contact with the function of monitoring and regulating liquid levels and temperatures.
The switching tube contains bistable protective gas contacts, mounted as an adjustable contact cartridge on a perforated strip. Plain contact cartridges can be subsequently adjusted for height. The function of make or break can then be altered by turning the cartridge through 180° degrees.
The permanent magnet built into the float switches the contacts when the level changes. The switching difference (hysteresis) is 4 mm. For temperature monitoring and regulation, thermal elements such as Pt100 and thermal contacts can be additionally incorporated.
The level controller is maintenance - free when nondeposit media are used.
For inductive loads, a protective circuit must be provided (free-wheeling diode/RC element).
The device must only be installed by specialists.

Max. viscosity 320mm²/S

Technical data

Switching tube	Stainless steel / Brass max. L = 6000mm
Connection flange	Stainless steel
Nominal pressure	VR50 - 10 bar max., SR45 - 1 bar max.
Float	Stainless steel VR50, SR45
Temperature of medium	100°C max.
Level contacts	bistable make/break/changeover adjustable
Plug socket connector	DIN 43651 or 6 pol.+PE IP65 or AG = connection housing
Switching potential	Datasheet IN - GB - 003(004)
Thermal elements	Pt100, thermal contact
Number of functions	max. 6 can be incorporated
Mounting position	vertical ± 30°
*Thermal contact	Sheet TR-GB-507

GOLDAMMER
REGELUNGSTECHNIK GMBH
SCHÖLLERSHEIDER STR. 15 PHONE (49) 2104/12093
P.O.BOX 10 02 17 FAX (49) 2104/12028
D-40802 METTMANN www.Goldammer-Regelungstechnik.com

Level regulator for surface mounting

Serie AM

- optional with single contact
- output signal:4-20 mA or 3 switching outputs with LED-level display
- according to execution suitable for contaminated media
- optional with LED display
- optional explosion-proof version
- Wahlweise mit LED-Anzeige

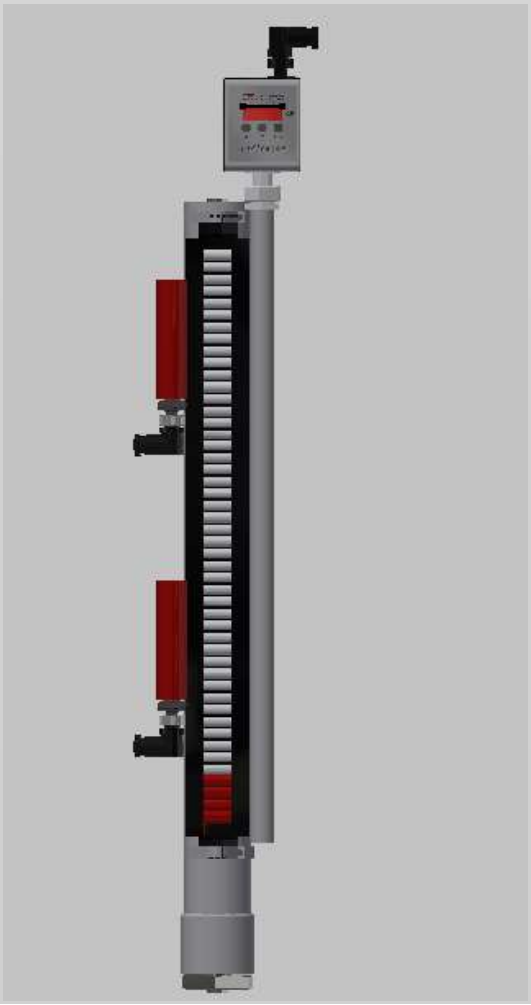

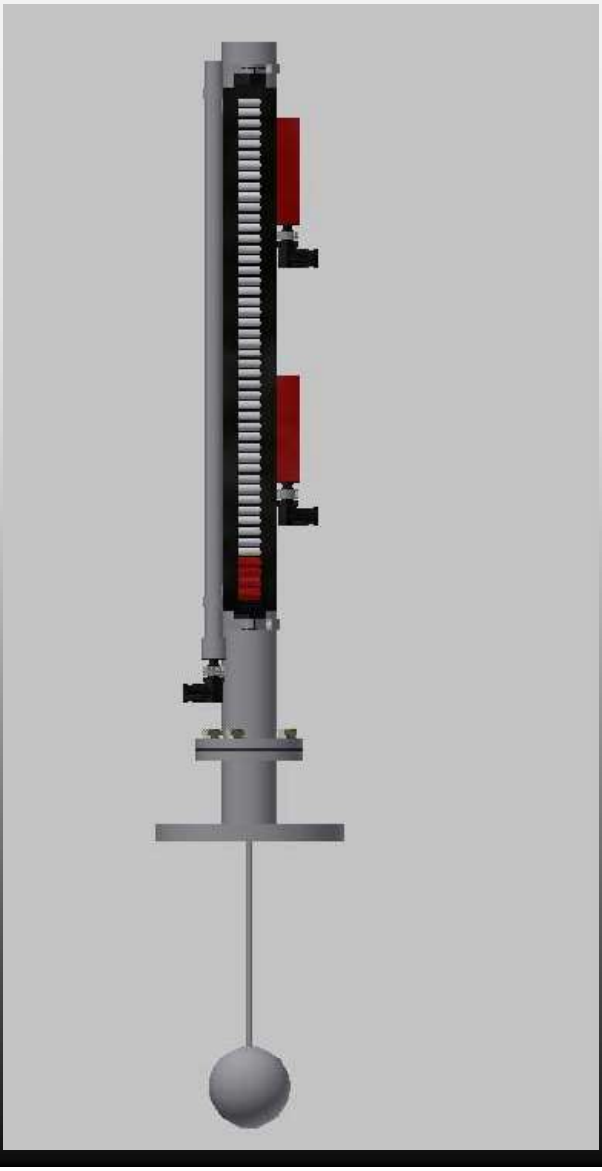

NRA - G½"

Level controller for surface mounting

serial No.	Date
AM-GB- 200	11/17

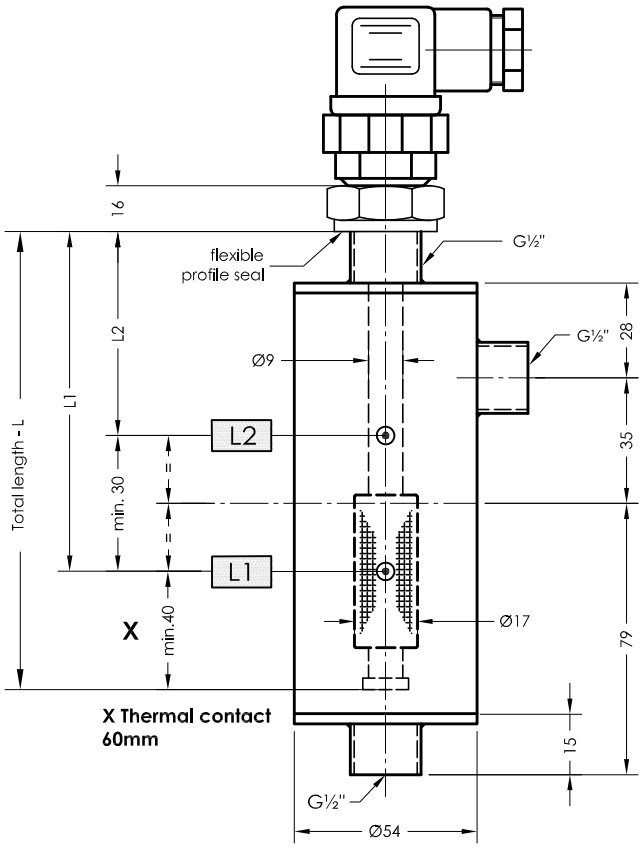

Connector variants

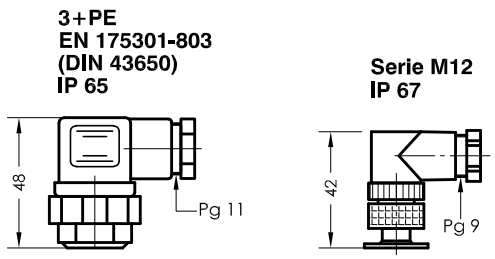

Order code

Specimen order

NRA - G1/2" - L128 - 01 - L1/88/S - L2/58/Ö - T70Ö - M12 - 24V

- **G1/2"** — Tank connection: G1/2"
- **L128** — Total length -L of switching tube (mm)
- **01** — Level contact type 01 = fixed, plain
- **L1/88/S - L2/58/Ö** — Switching point L1-L3/ mm from sealing edge; Ö = break; S = make; Function with increasing level
- **T70Ö** — Pt100 Thermal contact; T10Ö; T40Ö; T50Ö; T60Ö (S); T70Ö (S); T80Ö (S); T90Ö (Ö preferred)
- **M12** — Plug socket connector 3+PE M12
- **24V** — Operating voltage VDC 10-36 = 24V; VAC 20-230V = 230V

Technical data

Description

The level regulator type NRA - G1/2" for surface mounting on containers is a solenoid switch operating without contact with the function of monitoring and regulating liquid levels and temperatures. The switching tube contains bistable protective gas contacts, fixed in position. For fixed contacts, the contact intervals and their function must be given.
The permanent magnet built into the float switches the contacts when the level changes. The switching difference (hysteresis) is 4 mm. For temperature monitoring and regulation, thermal elements such as thermal contacts can be additionally incorporated.
For inductive loads, a protective circuit must be provided (free-wheeling diode/RC element).
The level regulator is maintenance - free when nondeposit media are used.
The device must only be installed by specialists.

Max. viscosity 150mm²/S

Technical data

Switching tube	Brass, max.L = 500mm
Connection	Brass G1/2" SW27
Mounting housings	Stainless steel
Nominal pressure	1 bar max.
Temperature of medium	80°C max.
Float	PU, type SB17
Level contacts	Make/break contacts
Operating voltage	230V AC/DC max. M12 - 24V AC/DC max.
Switching current	Datasheet IN - GB - 003
Switching potential	Datasheet IN - GB - 003
Thermal elements	Pt100, thermal contact
Number of functions	max. 3 can be incorporated
Mounting position	vertical ± 30°
*Thermal contacts	Sheet TR-GB-507

GOLDAMMER
REGELUNGSTECHNIK GMBH
SCHÖLLERSHEIDER STR. 15 PHONE (49) 2104/12093
P.O.BOX 10 02 17 FAX (49) 2104/12028
D-40802 METTMANN www.Goldammer-Regelungstechnik.com

NRA - G1"

Level controller for surface mounting

serial No.	Date
AM-GB- 200/1	11/17

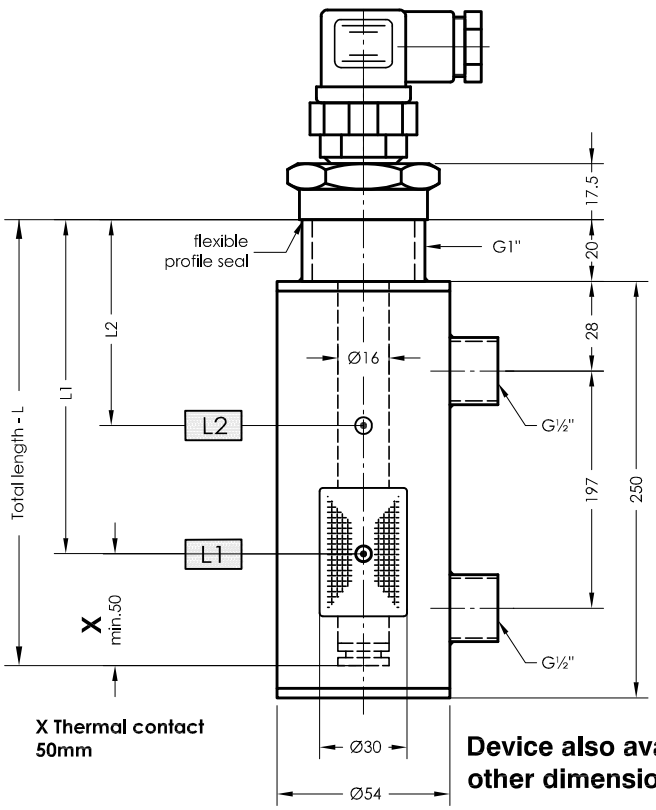

Device also available in other dimensions

Level contact

-03-

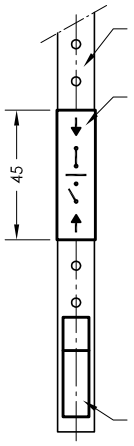

Strip with perforations 10mm

Bistable plain-contact cartridges.

The minimum distance between two contact cartridges is 50mm.

The make or break function is freely adjustable by 180°-rotation of the contact cartridge.

Thermal element

Connector variants

3+PE
EN 175301-803
(DIN 43650)
IP 65

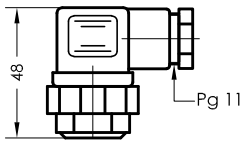

Serie M12
IP 67

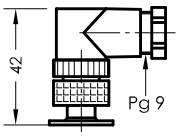

Order code

Specimen order

NRA - G1" - L260 - 03 - L1/140/S - L2/90/Ö - T70Ö - M12 - 24V

Total length -L of switching tube (mm)

Level contact type
01 = fixed, plain
03 = adjustable, plain

Switching point L1-L2/ mm from sealing edge
Ö = break
S = make
Function with increasing level

Pt100
Thermal contact
T10Ö
T40Ö
T50Ö
T60Ö (S)
T70Ö (S) (Ö
T80Ö (S) preferred)
T90Ö
(Indicate T1... - T2... for two thermal contacts)

Plug socket connector
3+PE
M12

Operating voltage
VDC 10-36 = 24V
VAC 20-230V = 230V

Technical data

Description

The level regulator type NRA - G1/2" for surface mounting on containers is a solenoid switch operating without contact with the function of monitoring and regulating liquid levels and temperatures. The switching tube contains bistable protective gas contacts. They may be fixed or alternatively mounted as an adjustable contact cartridge on a perforated strip. For fixed contacts, the contact intervals and their functions must be given. Plain contact cartridges can be subsequently adjusted for height. The function of make or break can then be altered by turning the cartridge through 180° degrees.
The permanent magnet built into the float switches the contacts when the level changes. The switching difference (hysteresis) is 4 mm. For temperature monitoring and regulation, thermal elements such as Pt100, Sensors and thermal contacts can be additionally incorporated. The level controller is maintenance - free when nondeposit media are used.
For inductive loads, a protective circuit must be provided (free-wheeling diode/RC element).
The device must only be installed by specialists.

Max. viscosity 150mm²/S

Technical data

Switching tube	Brass, max.L = 1000mm
Connection	Brass G1", SW41
Container connection	G1/2"
Mounting housings	Stainless steel
Nominal pressure	1 bar max.
Temperature of medium	100°C max.
Float	Hard-PU, type SR 30
Level contacts	bistable make/break/changeover optional fixed or adjustable
Plug socket connector	DIN 43650 IP65
Operating voltage	230V AC/DC max. M12 - 24V AC/DC max.
Switching current	Datasheet IN - GB - 003
Switching potential	Datasheet IN - GB - 003
Thermal elements	Pt100, thermo contact
Number of functions	max. 3 can be incorporated
Mounting position	vertical ± 30°
*Thermal contacts	Sheet TR-GB-507

GOLDAMMER
REGELUNGSTECHNIK GMBH

SCHÖLLERSHEIDER STR. 15 PHONE (49) 2104/12093
P.O.BOX 10 02 17 FAX (49) 2104/12028
D-40802 METTMANN www.Goldammer-Regelungstechnik.com

NRA 70 - TAB

Display of level

serial No.	Date
AM-GB- 200a/1	08/17

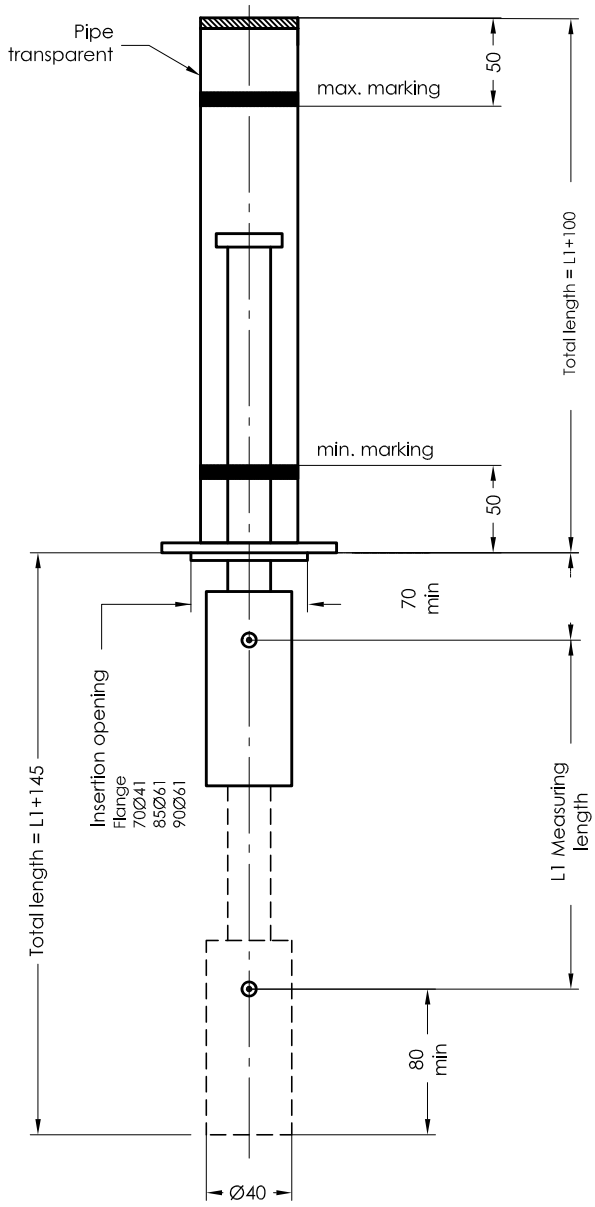

Connection flanges

Flange 70

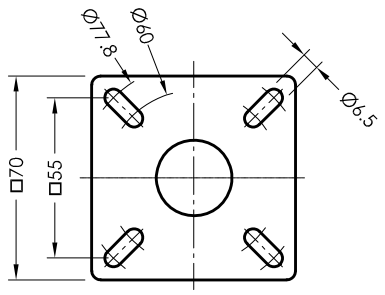

Flange 85

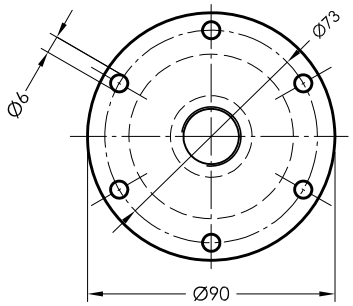

according to
DIN24557 part 2

Order code

Specimen order
NRA 70 - TAB - L1 400

Tank connection	Measuring length
70	
85	
90	

Technical data

Description

The NRA-TAB level status display for container structure is used for the optical monitoring of the status of the liquid, in particular for heavily soiled liquids and also for those with metallic wear debris.

The float system is located below the container lid, thus changes in level are thus visibly communicated above.

The device may only be installed by specialist personnel.

Max. viscosity 320mm²/S

Technical data

Measuring tube	Aluminium, max. L1=1000mm
Connection flange	Polyamide with flat seal
Nominal pressure	pressureless
Float	hard-PU AFB
Temperature of medium	80°C max.
Pipe transparent	plexiglas, limpid
Spec. weight	min. 0,8 g/ml
Mounting position	vertical ± 30°

GOLDAMMER
REGELUNGSTECHNIK GMBH

SCHÖLLERSHEIDER STR. 15 PHONE (49) 2104/12093
P.O.BOX 10 02 17 FAX (49) 2104/12028
D-40802 METTMANN www.Goldammer-Regelungstechnik.com

NRA 85 - PU

Level controller for contaminated media

serial No. Date
AM-GB- 200a/2 11/17

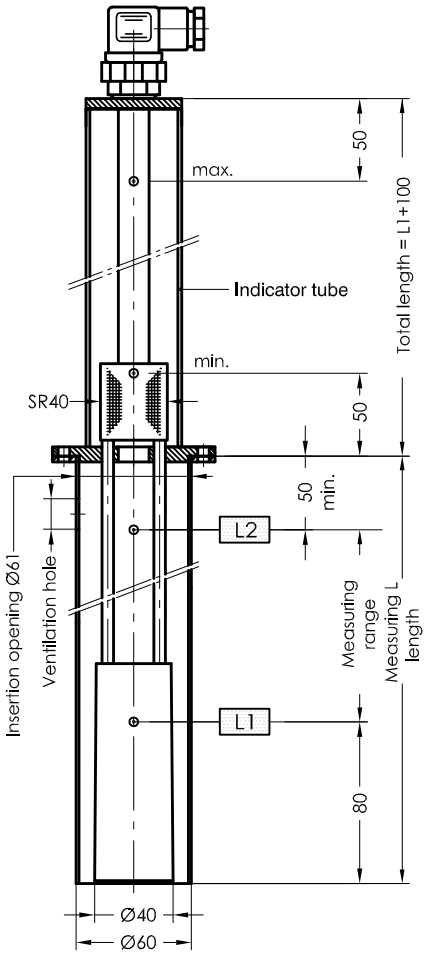

Flange 85 PA
according to DIN24557 part 2

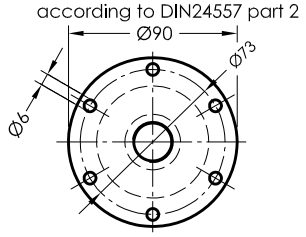

Level contact

Level contact -04-

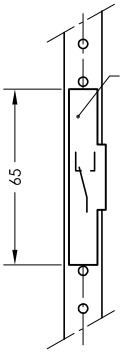

Bistable changeover-contact cartridges.

The minimum distance between two fixed contact cartridges is 70mm.

Level contact -03-

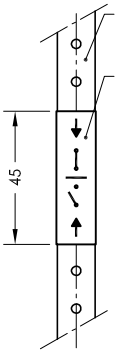

Strip with perforations 10mm

Bistable plain-contact cartridges.

The minimum distance between two contact cartridges is 50mm.

The make or break function is freely adjustable by 180°-rotation of the contact cartridge.

Connector variants

3+PE
EN 175301-803
(DIN 43650)
IP 65

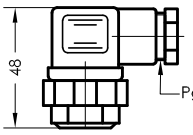

DIN 43651
(EN 175201-804)
6+PE
IP 65

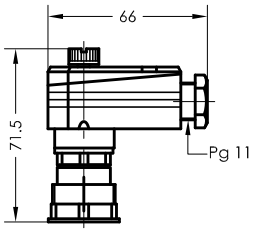

Serie M12
IP 67

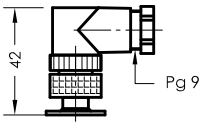

Order code

Specimen order

NRA 85-PU-L350-03-L1/270/S-L2/50/Ö-M12-24V

Measuring length

Level contact type
01 = fixed, plain
02 = fixed, changeover
03 = adjustable, plain
04 = adjustable, changeover

Switching point L1-L3/ mm from sealing edge
Ö = break
S = make
W= changeover
Function with increasing level

Plug socket connector
3+PE
DIN 43651
M12

Operating voltage
VDC 10-36 = 24V
VAC 20-230V = 230V

Technical data

Description

The NRA 85 - PU level regulator for container structure is a magnetic switch that operates without contact and is used to implement the optical and electrical monitoring and regulation of heavily soiled liquids including those with metallic wear debris.
The float system is located in the container, the bistable protective gas contacts are arranged above the container lid and are actuated by a magnet system outside the media. The contacts can either be fixed in place or as a contact cartridge which can be mounted at 10 mm gaps along a perforated strip.
If fixed contacts are to be used, the contact distances and the switching function must be specified. Contact cartridges can be height adjusted at a later date. The function as 'opener' or 'closer' can be modified by rotating the cartridge by 180°.
The switching difference (hysteresis) is 4 mm.
The level regulator is maintenance-free when used with media that does not form deposits. When used with inductive consumers, a protective switch should be used. Terminal assignments are made in accordance with the datasheet for plug variations of all internal level regulators.
The device may only be installed by specialist personnel.

Max. viscosity 320mm²/S

Technical data

Protective tube	Stainless steel
Switching tube	Brass, max.L=800mm
Connection flange	Polyamide with flat seal
Nominal pressure	pressureless
Temperature of medium	80°C max.
Float	Hard-PU AFB
Indicator tube	Plexiglas transparent
Spec. weight	min. 0,8 g/ml
Level contacts	bistable make/break/changeover optional fixed or adjustable
Switching potential	Datasheet IN - GB - 003(004)
Number of functions	max. 3 can be incorporated
Mounting position	vertical ± 30°

GOLDAMMER
REGELUNGSTECHNIK GMBH
SCHÖLLERSHEIDER STR. 15 PHONE (49) 2104/12093
P.O.BOX 10 02 17 FAX (49) 2104/12028
D-40802 METTMANN www.Goldammer-Regelungstechnik.com

NRA 85 - PU - MA

Level controller for contaminated media 4-20mA/switching outputs

serial No.	Date
AM-GB- 200a/3	08/17

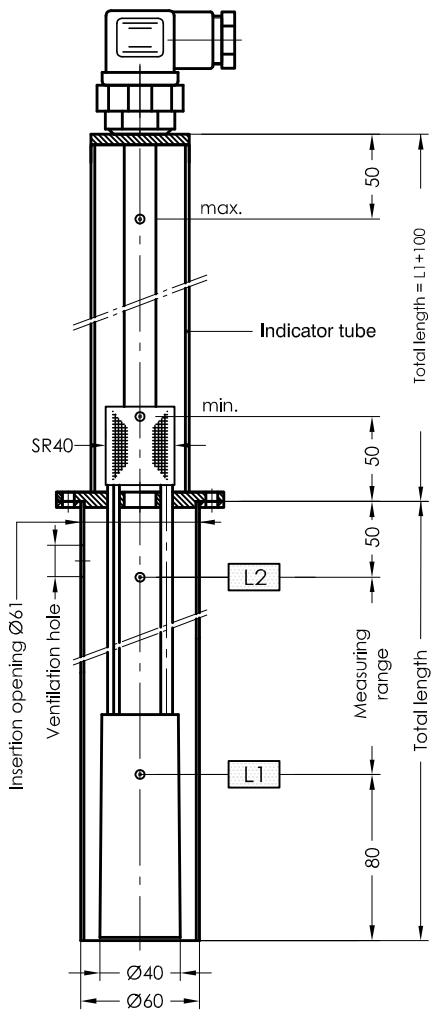

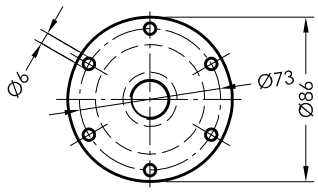

Flange 85
according to DIN24557 part 2

Level contact

Plug securing

Connector variants

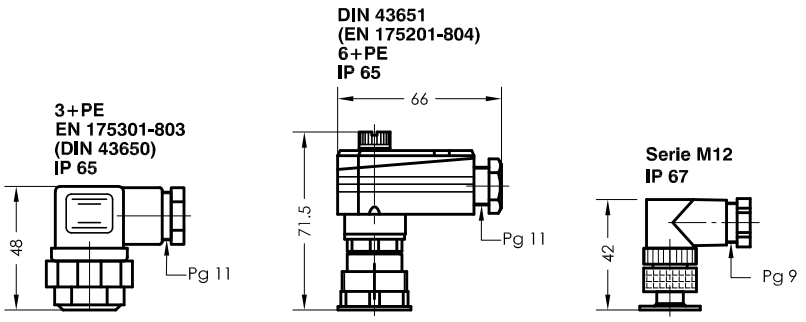

Order code

Specimen order

NRA 85-PU-MA-L370-L1/290/S-L2/60/Ö-M12

Total length
Special lenghts
L250
L370
L500
L800

Switching point L1-L3/ mm from sealing edge
Ö = break
S = make
Function with increasing level

Plug socket connector
3+PE
DIN 43651
M12

Technical data

Description

The NRA 85 - PU - MA level regulator for container structure is an electro-magnetic switch that operates without contact and is used to implement the constant remote monitoring of heavily soiled liquids including those with metallic wear debris.
The float is located in the container, a resistance measuring chain is arranged above the container lid and is actuated by a magnet system outside the media.
Cables of any length can be used to constantly evaluate the level for the purposes of automatic control and display.
The level-dependent signal is converted by the installed measuring transducer into a linear current change of 4-20mA.
Optionally, in addition fixedly arranged bistable level contacts can be installed.
The level regulator is maintenance-free when used with media that does not form deposits.
The device may only be installed by specialist personnel.

Max. viscosity 320mm²/S

Technical data

Protective tube	Stainless steel
Switching tube	MS max.L=800mm
Connection flange	Polyamide with flat seal
Nominal pressure	pressureless
Temperature of medium	80°C max.
Float	Hard-PU AFB
Indicator glass	Plexiglas transparent
Spec. weight	min. 0,8 g/ml
switching capacity	
level contact	10W / VA
Operating voltage	12V ... 30V DC
Measuring range	4-20mA = 0-100%
Contact pitch	7,5 mm
Load	RB= U-12V / 20mA
Mounting position	vertical ± 30°

GOLDAMMER
REGELUNGSTECHNIK GMBH
SCHÖLLERSHEIDER STR. 15 PHONE (49) 2104/12093
P.O.BOX 10 02 17 FAX (49) 2104/12028
D-40802 METTMANN www.Goldammer-Regelungstechnik.com

NRA 85 - PU - NA - MA

Level controller forcontaminated media 4-20mA / 3 PNP outputs

serial No. Date
AM-GB- 200a/4 08/17

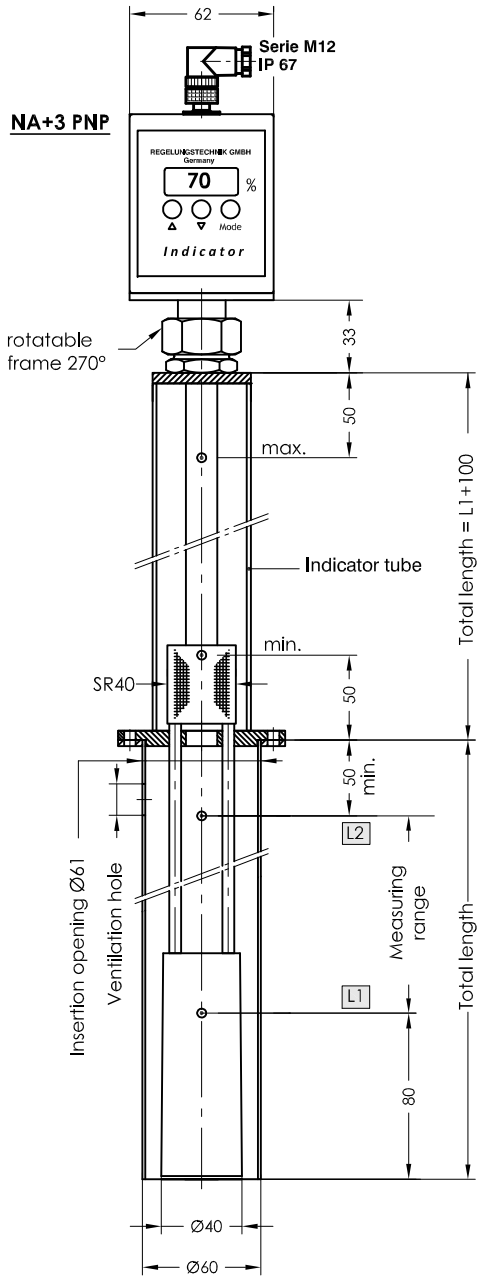

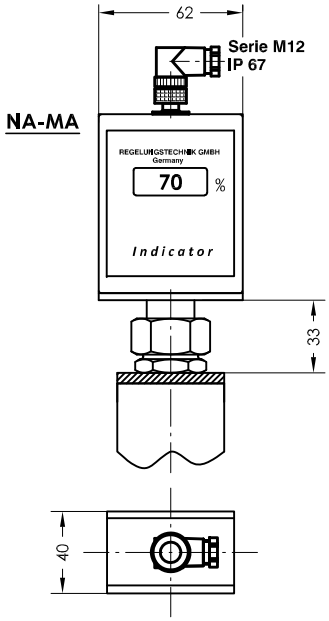

Flange 85
according to
DIN24557 part 2

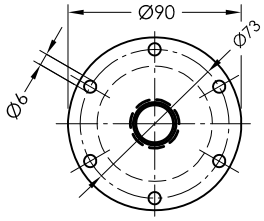

Plug securing

NA + 3PNP

1 = +12V-30V DC
4 = level L1 PNP
2 = level L2 PNP
5 = level L3 PNP
3 = GND

NA-MA

1 = +12V-30V DC
4 = level 4-20mA
3 = GND

Order code

Specimen order

NRA 85 - PU - NA - MA - L370

NA - MA	Total length
NA + L1 PNP	Standard lenghts
NA + L2 PNP	L250 = L500
NA + L3 PNP	L370 = L800

Technical data

Description

The NRA 85-PU-NA-MA level regulator for container structure is an electro-magnetic switch that operates without contact and is used to implement the constant remote monitoring of heavily soiled liquids including those with metallic wear debris.
The level-dependant signal is evaluated via an electronic component with LED display which displays the current level of liquid.
The setting of a maximum of 3 level contacts is carried out using three buttons on the control unit.
You may choose from level display and 4-20mA or level display with three switch outputs.
The electrical connection to the power supply and to one or more regulators, PLC or to measuring instruments requires a shielded cable for interference free data signal transmission for all sectors of electronics.
The level regulator is maintenance-free when used with media that does not form deposits.

The device may only be installed by specialist personnel.

Max. viscosity 320mm²/S

Technical data

Protective tube	Stainless steel
Switching tube	MS max. L=800mm
Connection flange	Polyamide with flat seal
Nominal pressure	pressureless
Temperature of medium	80°C max.
Float	Hard-PU AFB
Indicator glass	Plexiglas transparent
Spec. weight	min. 0,8 g/ml
Plug socket connector	M12 IP67
Operating voltage	12V ... 30V DC
Measuring range	4-20mA
Contact pitch	7.5 mm
Load	RB= U-12V / 20mA
Display	LED three digit
Level switching points	max. 3 can be incorporated
Hysterese	adjustable
Switching current	max. 1A
Mounting position	vertical ± 30°
*Indicator	Sheet IND-GB

GOLDAMMER
REGELUNGSTECHNIK GMBH
SCHÖLLERSHEIDER STR. 15 PHONE (49) 2104/12093
P.O.BOX 10 02 17 FAX (49) 2104/12028
D-40802 METTMANN www.Goldammer-Regelungstechnik.com

NRA 6RS/BA...

Level controller for tank top mounting

serial No. Date
AM-GB- 200c/1 10/19

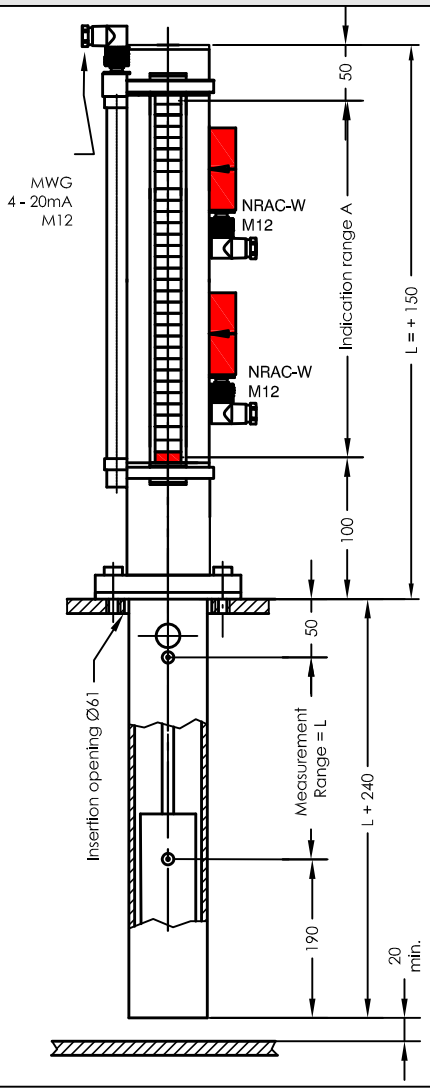

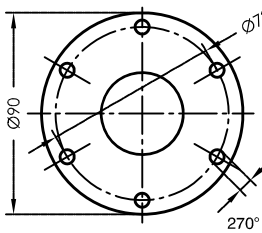

Flange NR85
according to
DIN24557 part 2

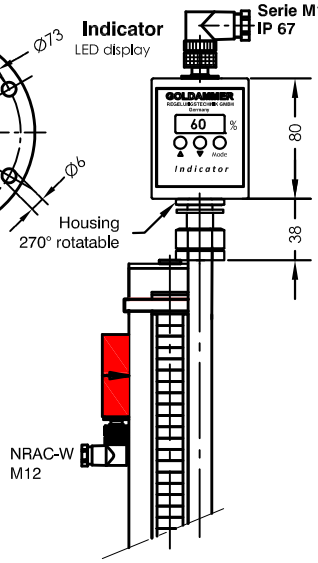

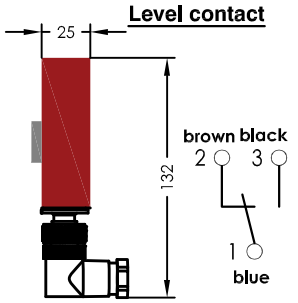

NRAC-W - M12

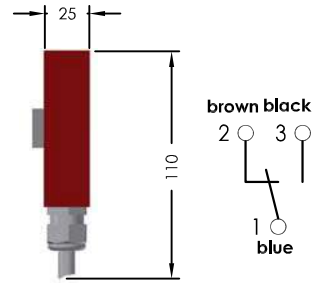

NRAC-W - Pg 9

Pin Assignment

Connector Pin Assignment
MWG

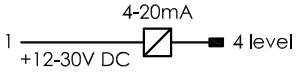

Connector Pin Assignment
Indicator 3PNP level
1 = +12V-30V DC
3 = GND
2 = L1 PNP
4 = L2 PNP
5 = L3 PNP

Connector Pin Assignment
Indicator level display
1 = +12V-30V DC
4 = 4 - 20mA
3 = GND

Order code

Specimen order

NRA 6RS / BA - PUAFB x 500 - 3 / NRAC-W-M12 - MWG -7.5 - LA - 4-20mA

Connection
BA Flange

Float type
EL MD6
PU AFB

Measurement Range = L in mm

Number of level contact
Type: NRAC-W
NRAC-W-M12-LED
NRAC-W-Pg 9

Contact pitch
7.5 / 15 mm

Indicator display
LA - PNP L3
LA - 4-20mA

Transmitter type MWG
4-20mA

Technical data

Description

The level regulator type NRA 6RS/BA... is designed for container mounting.
Optical level height monitoring without external power supply via a magnetic rotary display.
By fitting infinitely adjustable bistable electromagnetic changeover contact elements on the visible indicator scale various open-loop control values can be set.
Optionally NRA-W-L contacts with LED displays can be fitted.
For continuous teletransmission a static pressure sensor or transducer can be fitted.
The output signal is 4-20 mA, optionally assembling indicator - 3-digit LED-level display, output over 3 PNP level-switching outputs - 4-20mA
Optional methods of connection; other methods on request.
The device must only be installed by specialists.

The level controllers are designed and tested according to the rule AD2000. Quality assurance according to module H, H1.

Max. viscosity 150mm²/S

Technical data

Nominal pressure	ELMD6 - 6 bar max PU AFB - 1 bar
Indicator assembly	stainless steel / protective tube stainless steel
Measurement Range	max. 2000mm
Medium temperature	80°C max.
Medium density	0,85 kg/dm³ min.
Float	Ceramic Type ELMD6, PU AFB
Level contacts	bistable changeover contacts number optionally selectable
NRAC-W	60W - 250V AC/DC max.
NRAC-W-L	24V max. (LED)
Current switch PNP	1A max
Pressure sensor	12-30 VDC
Measuring range	4-20 mA
Contact pitch	7,5 / 15 mm
Linearity	0,5%
Load	RB= U-12V / 20mA
*Indicator	Sheet IND-GB

GOLDAMMER
REGELUNGSTECHNIK GMBH
SCHÖLLERSHEIDER STR. 15
P.O.BOX 10 02 17
D-40802 METTMANN
PHONE (49) 2104/12093
FAX (49) 2104/12028
www.Goldammer-Regelungstechnik.com

NRA 16RS/BA...

Level controller for tank mounting

serial No. Date
AM-GB- 200c/2 10/19

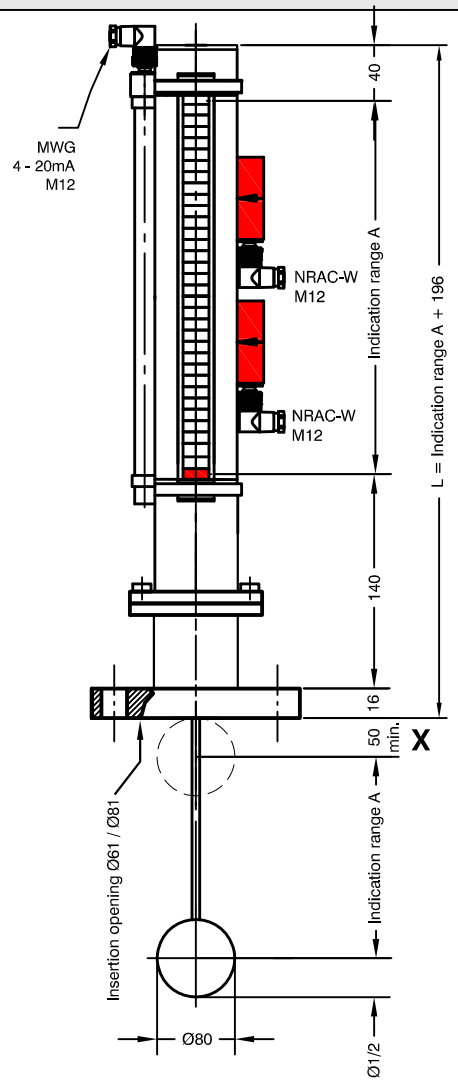

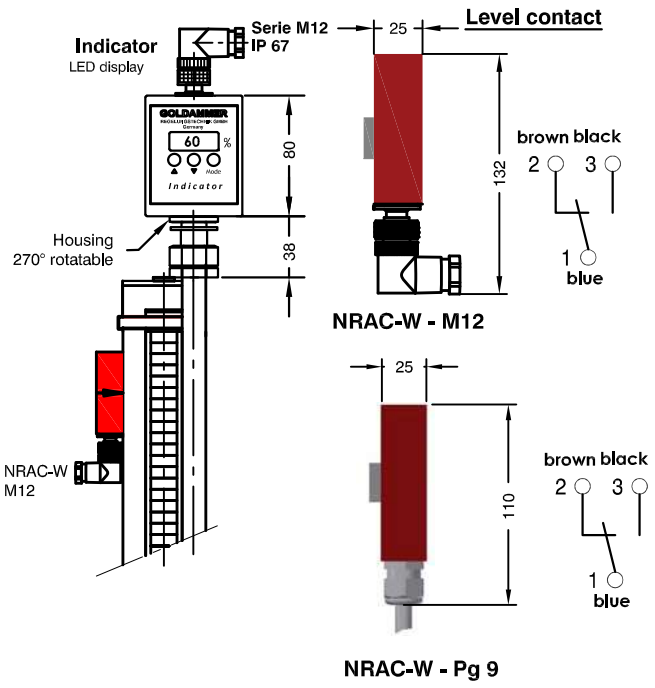

Pin Assignment

Connector Pin Assignment
MWG

Connector Pin Assignment
Indicator 3PNP level
1 = +12V-30V DC
3 = GND
2 = L1 PNP
4 = L2 PNP
5 = L3 PNP

Connector Pin Assignment
Indicator level display
1 = +12V-30V DC
4 = 4 - 20mA
3 = GND

Order code

Specimen order

NRA 16RS / BA - 80 - 65 x 500 - X - 3 / NRAC - W - M12 - MWG -7.5 - LA - 4-20mA

Design
Float type
Stainless steel
Ø80
Ø60 x 250
Connecting flange DN50 / DN65
Indication range = A in mm
max. measurement point in mm
Number of level contact
Type: NRAC-W-M12
NRAC-W-M12-LED
NRAC-W-Pg 9
Transmitter type MWG 4-20mA
Contact pitch
7.5 / 15 mm
Indicator display
LA - PNP L3
LA - 4-20mA

Technical data

Description

The level regulator type NRA 16RS/BA... is designed for container mounting.
Optical level height monitoring without external power supply via a magnetic rotary display.
By fitting infinitely adjustable bistable electromagnetic changeover contact elements on the visible indicator scale various open-loop control values can be set.
Optionally NRA-W-L contacts with LED displays can be fitted.
For continuous teletransmission a static pressure sensor or transducer can be fitted.
The output signal is 4-20 mA, optionally assembling indicator
- 3-digit LED-level display, output over 3 PNP level-switching outputs
- 4-20mA

Optional methods of connection; other methods on request.
The device must only be installed by specialists.
The level controllers are designed and tested according to the rule AD2000. Quality assurance according to module H, H1.

Max. viscosity 320mm²/S

Technical data

Nominal pressure	1bar max
Indicator assembly	Stainless steel
Measurement range	max. 1800mm
Connection flange	DN50 PN16 EN1092-1, DN65 PN16 EN1092-1
Medium temperature	120°C max.
Medium density	0,80 kg/dm³ min.
Float	Stainless steel
Level contacts	bistable changeover contacts number optionally selectable
NRAC-W	60W - 250V AC/DC max.
NRAC-W-L	24V max. (LED)
Current switch PNP	1A max.
Pressure sensor	12-30 VDC
Measuring range	4-20 mA
Contact pitch	7,5 / 15 mm
Linearity	0,5%
Load	RB= U-12V / 20mA
*Indicator	Sheet IND-GB

GOLDAMMER
REGELUNGSTECHNIK GMBH
SCHÖLLERSHEIDER STR. 15 PHONE (49) 2104/12093
P.O.BOX 10 02 17 FAX (49) 2104/12028
D-40802 METTMANN www.Goldammer-Regelungstechnik.com

Offer document NRA16RS / BA

Level controller for tank mounting

serial No. Date
AM-GB- 200c/3 09/19

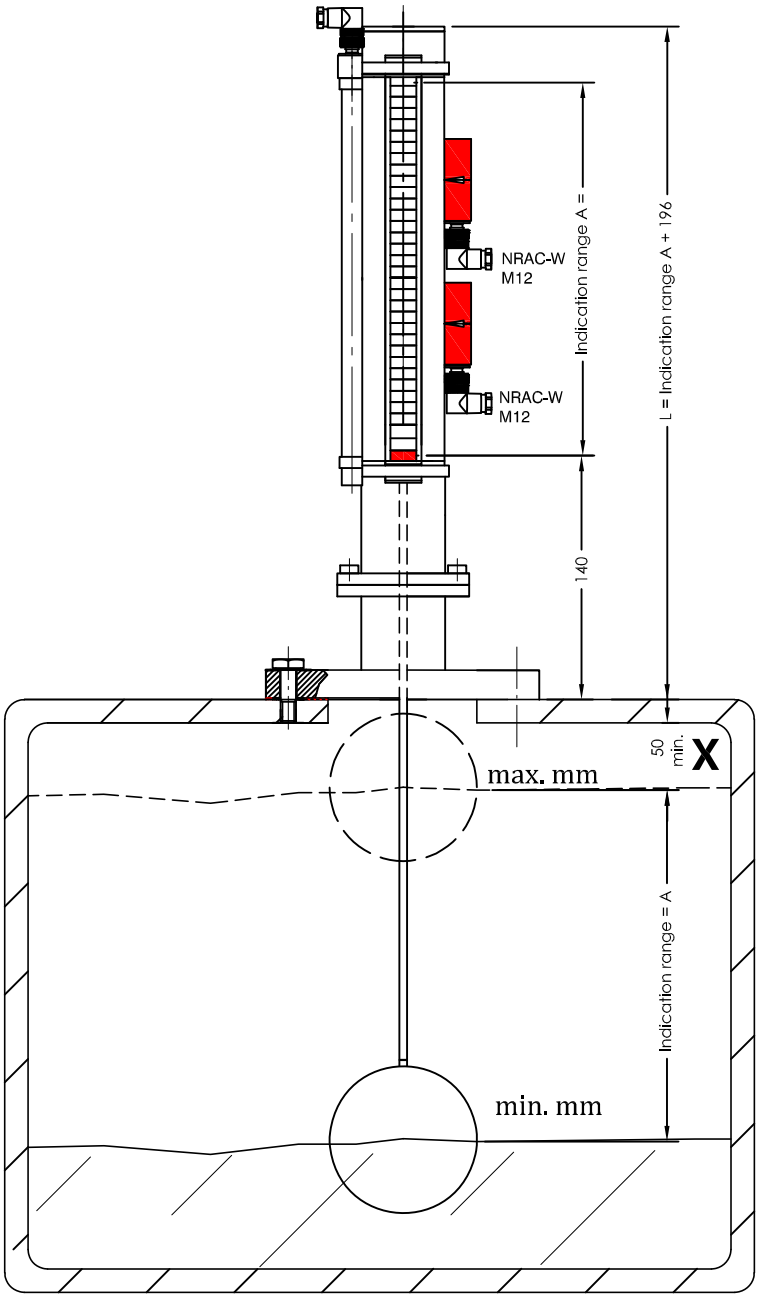

Connection flange DN .....
Indication range A ..... mm
max. swiching point ..... mm
Medium density = ... kg/dm^3
Nominal pressure ..... bar

GOLDAMMER
REGELUNGSTECHNIK GMBH
SCHÖLLERSHEIDER STR. 15 PHONE (49) 2104/12093
P.O.BOX 10 02 17 FAX (49) 2104/12028
D-40802 METTMANN www.Goldammer-Regelungstechnik.com

Offer document NRA16RS / BA

Level controller for tank mounting

serial No. Date
AM-GB- 200c/4 09/19

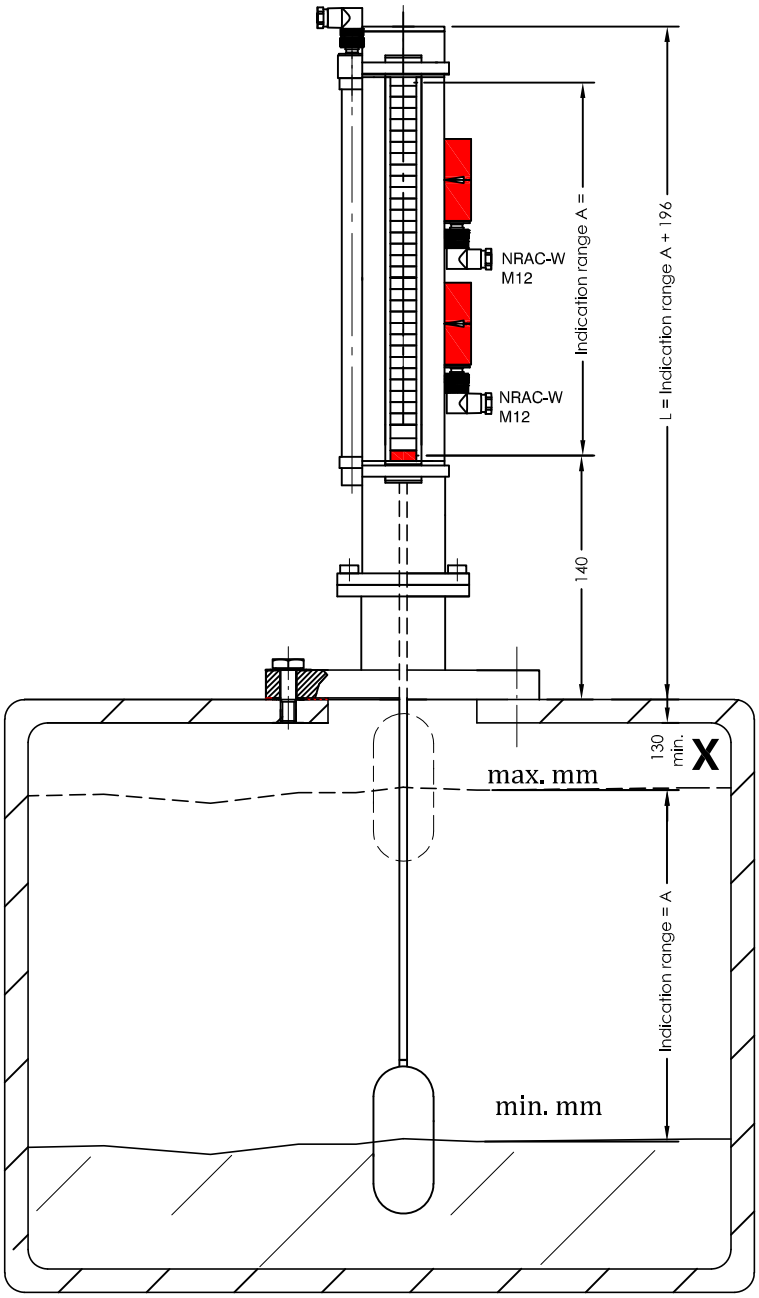

Connection flange DN .....
Indication range A ..... mm
max. swiching point ..... mm
Medium density = ... kg/dm^3
Nominal pressure ..... bar

GOLDAMMER
REGELUNGSTECHNIK GMBH
SCHÖLLERSHEIDER STR. 15 PHONE (49) 2104/12093
P.O.BOX 10 02 17 FAX (49) 2104/12028
D-40802 METTMANN www.Goldammer-Regelungstechnik.com

NRA 25RS/...

Level controller for surface mounting

serial No.	Date
AM-GB- 201a	10/19

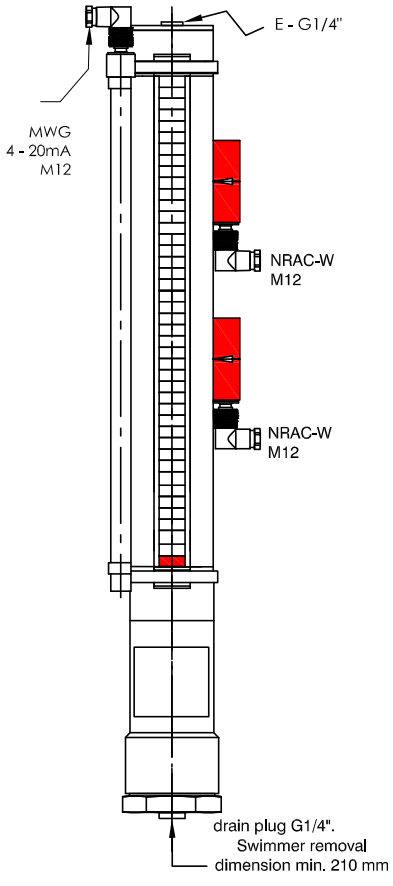

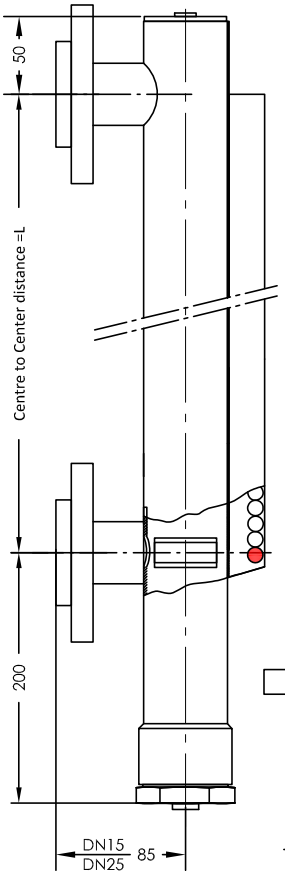

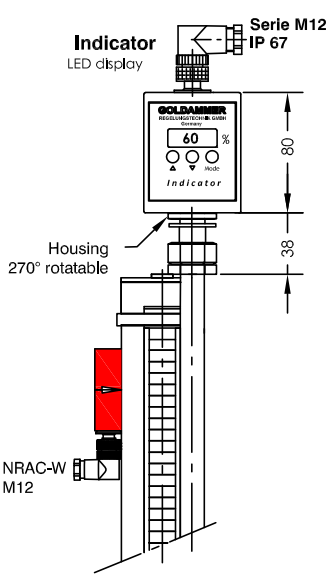

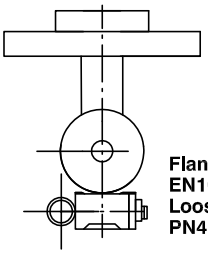

Flange according to
EN1092-1 type 11
Loose flange, smooth collar
PN40 DN15 / DN25

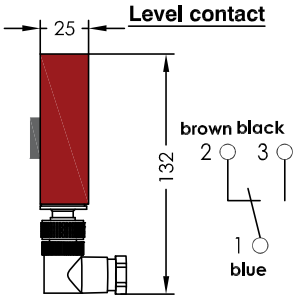

NRAC-W - M12

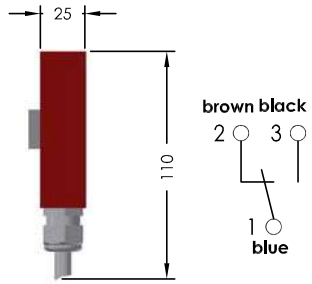

NRAC-W - Pg 9

Pin Assignment

Pin Assignment
MWG

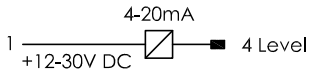

Pin Assignment
Indicator - 3PNP level

1 = +12V-30V DC
3 = GND
2 = L1 PNP
4 = L2 PNP
5 = L3 PNP
4 level

Pin Assignment
Indicator - level indicator

1 = +12V-30V DC
4 = 4 - 20mA
3 = GND

Order code

Specimen order

NRA 25RS / 03 x 2000 - 3 / NRAC-W-M12 - MWG - 7.5 - I - G1/4" A - G1/4" E

Connection
01 Sleeve G1/2"
02 Sleeve G1"
03 Flange DN15
04 Flange DN25
10 Flange DN32
Centre distance=L in mm

Number of level contact
Type: NRAC-W-M12
NRAC-W-M12-LED
NRAC-W-Pg 9

Contact pitch
7.5 / 15 mm

Transmitter type MWG - 4-20mA

Drain Screw G1/4" = A , Bleed Screw G1/4" = E
I = Indicator 3PNP - LED display
II= Indicator 4-20mA - LED display

Technical data

Description

The level controller type NRA 25RS/... is designed for surface mounting on containers as communicating vessels. Optical level height monitoring without external power supply via a magnetic rotary display.
By connecting infinitely adjustable, bistable electromagnetic changeover contacts to the visual indicating scale, various control options can be configured. On request contact type NRA-W-L with indicator light can be fitted. For continuous remote transmission, a transmitter can be fitted.
The output signal is 4-20 mA, optionally assembling indicator. - 3-digit LED-level display, output over 3 PNP level-switching outputs - or 4-20mA.
Electrical connection to the voltage supply and to one or several controllers, stored program controller or measuring instruments can take place with a standard two-core twisted cable. The cable can be of any length.
The types of connection can be freely selected; other types on request.
The device has to be installed by specialists only. Level controller are resistant to: mineral oil, hydrous solution, phosphoric ester, triglyceride (rape oil), synthetic ester, polyclycols. The level controllers are designed and tested according to the rule AD2000. Quality assurance according to module H, H1.

Max. viscosity 150mm²/S

Connections - Datasheet AM - GB - 204

Technical data

Nominal pressure	25bar max.
Float tube	Stainl. steel, max. L=6000 mm Stainl. steel, magnetic rotary display
Medium temperature	120°C max.
Medium density	0,72 kg/dm³ min.
Float	Stainl. steel MD25
Level contacts	bistable changeover contacts
NRAC-W	60W - 250V AC/DC max.
NRAC-W-L	24V max. (LED)
Current switch	1A max.
Transmitter	12-30 VDC
Measuring range	4-20 mA = 0-100%
Contact pitch	7,5 / 15 mm
Linearity	0,5%
Load	RB= U-12V / 20mA
*Indicator	Sheet IND-GB

GOLDAMMER
REGELUNGSTECHNIK GMBH
SCHÖLLERSHEIDER STR. 15
P.O.BOX 10 02 17
D-40802 METTMANN
PHONE (49) 2104/12093
FAX (49) 2104/12028
www.Goldammer-Regelungstechnik.com

NRA 25RS/...

Level controller for surface mounting with integrated stop valve

serial No. Date
AM-GB- 201b 10/19

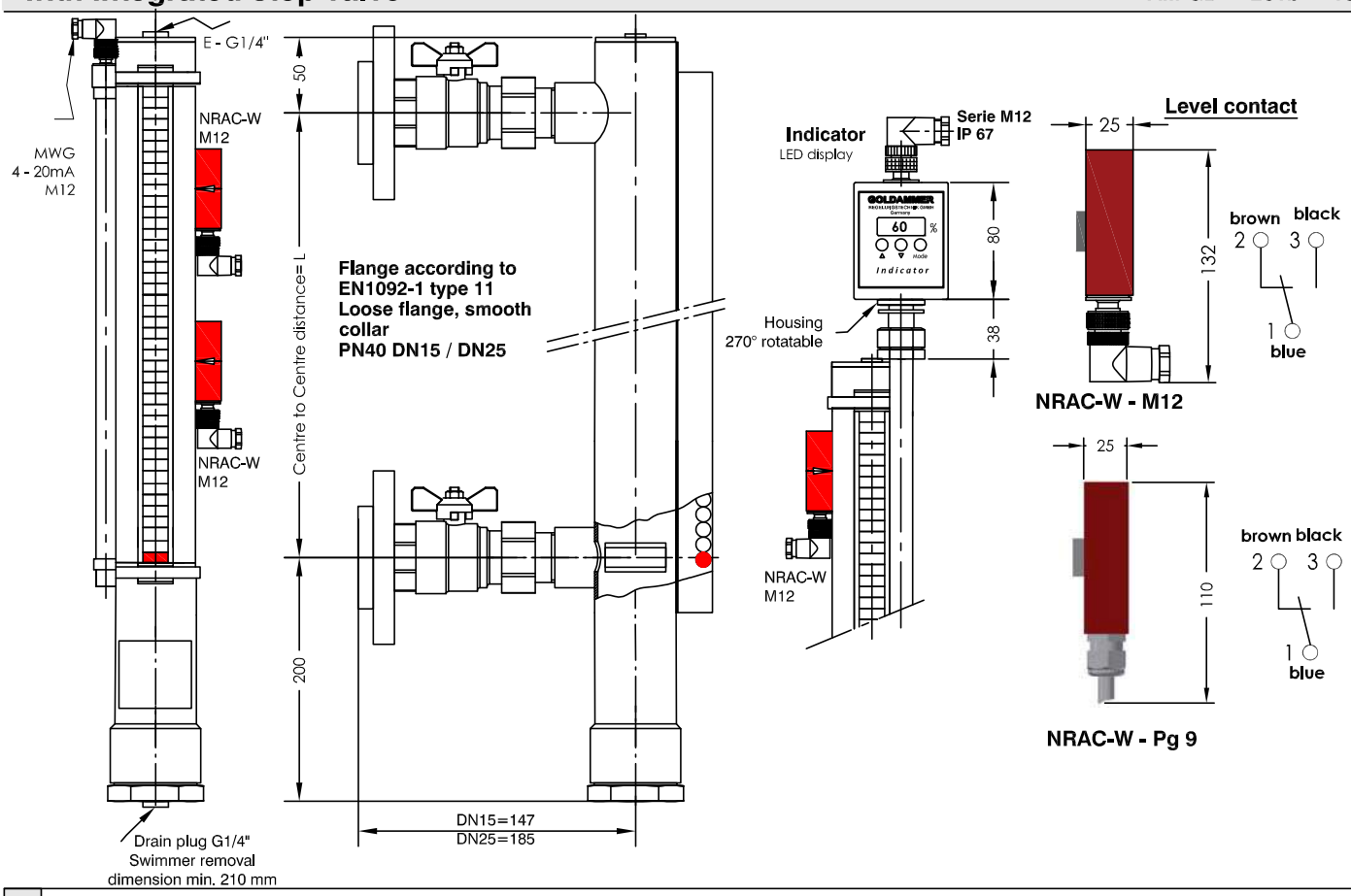

Pin Assignment

Pin Assignment
MWG

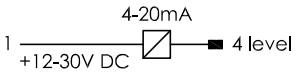

Pin Assignment
Indicator - 3PNP level

1 = +12V-30V DC
3 = GND
2 = L1 PNP
4 = L2 PNP
5 = L3 PNP

Pin Assignment
Indicator - level indicator

1 = +12V-30V DC
4 = 4 - 20mA
3 = GND

Order code

Specimen order

NRA 25RS / 07 x 2000 - 3 / NRAC - W - M12 - MWG - 7.5 - I - G1/4" A - G1/4" E

Connection
07 Ball valve/flange DN15
08 Ball valve/flange DN25

Centre distance=L in mm

Number of level contact
Type: NRA-W
NRA-W-L24V
NRA-W-L230V

Contact pitch
7.5 / 15 mm

Drain Screw G1/4" = A - Bleed screw G1/4" = E
I = Indicator 3PNP - LED display
II= Indicator 4-20mA - LED display

Transmitter type MWG - 4-20mA

Technical data

Description

The level controller type NRA 25RS/... is designed for surface mounting on containers as communicating vessels. Optical level height monitoring without external power supply via a magnetic rotary display.
By connecting infinitely adjustable, bistable electromagnetic changeover contacts to the visual indicating scale, various control options can be configured. On request contact type NRA-W-L with indicator light can be fitted. For continuous remote transmission, a transmitter can be fitted.
The output signal is 4-20 mA, optionally assembling indicator.
- 3-digit LED-level display, output over 3 PNP level-switching outputs
- or 4-20mA

Electrical connection to the voltage supply and to one or several controllers, stored program controller or measuring instruments can take place with a standard two-core twisted cable. The cable can be of any length.
The types of connection can be freely selected; other types on request.
The device has to be installed by specialists only.
Level controller are resistant to: mineral oil, hydrous solution, phosphoric ester, triglyceride (rape oil), synthetic ester, polyclycols.
The level controllers are designed and tested according to the rule AD2000.
Quality assurance according to module H, H1.

Max. viscosity 320mm²/S

Technical data

Nominal pressure	25bar max.
Test pressure	34bar
Float tube	Stainl. steel, max. L=6000 mm Stainl. steel, magnetic rotary display
Medium temperature	120°C max.
Medium density	0,72 kg/dm³ min.
Float	Stainl. steel MD25
Level contacts	bistable changeover contacts
NRAC-W	60W - 250V AC/DC max.
NRAC-W-L	24V max. (LED)
Current switch	1A max.
Transmitter	12-30 VDC
Measuring range	4-20 mA = 0-100%
Contact pitch	7,5 / 15 mm
Linearity	0,5%
Load	RB= U-12V / 20mA

*Indicator Sheet IND-GB

GOLDAMMER
REGELUNGSTECHNIK GMBH
SCHÖLLERSHEIDER STR. 15
P.O.BOX 10 02 17
D-40802 METTMANN
PHONE (49) 2104/12093
FAX (49) 2104/12028
www.Goldammer-Regelungstechnik.com

NRA 25RS/...

Level controller for surface mounting with integrated flange ball valve

serial No. Date
AM-GB- 201b/1 02/18

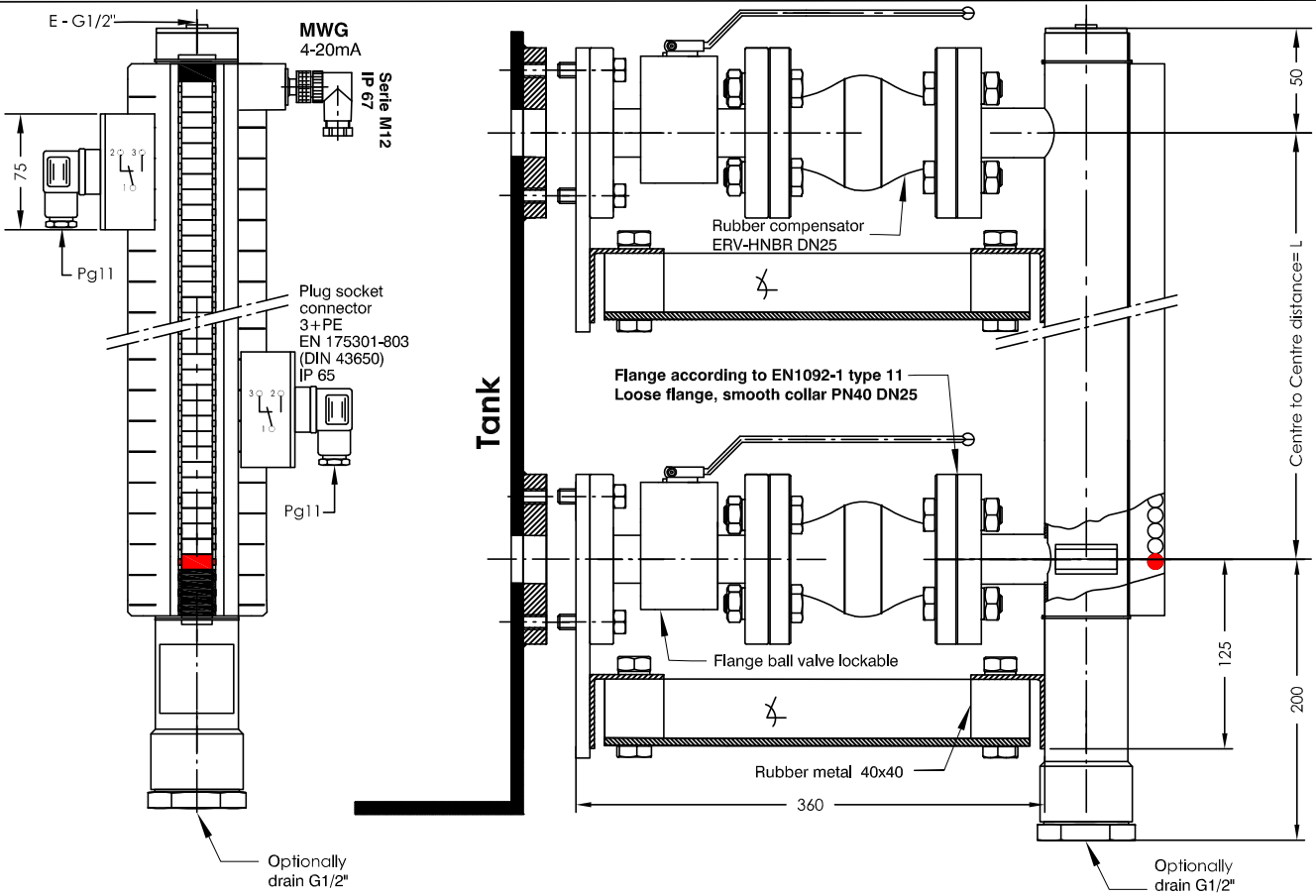

Pin Assignment

Pin Assignment
NRA-W-L (LED)

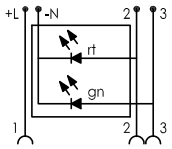

Pin Assignment
MWG

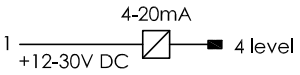

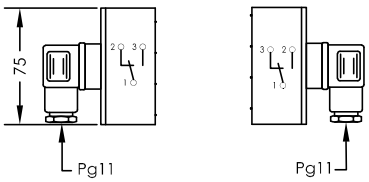

Order code

Specimen order

NRA 25RS / 08-G x 2000 - 3 / NRA - W - MWG - 15 - G1/2" A - G1/2" E

Connection
08-G - Ball valve / compensator DN25/ rubber matal seal WL

Centre distance=L in mm

Number of level contact
Type: NRA-W
NRA-W-L24V
NRA-W-L230V

Contact pitch
7.5 / 15 mm

Transmitter type MWG - 4-20mA

Drain Screw G1/2" = A - Bleed screw G1/2" = E

Technical data

Description

The level controller type NRA 25RS/... is designed for surface mounting on containers as communicating vessels. Optical level height monitoring without external power supply via a magnetic rotary display.
By connecting infinitely adjustable, bistable electromagnetic changeover contacts to the visual indicating scale, various control options can be configured.
On request contact type NRA-W-L with indicator light can be fitted.
For continuous remote transmission, a transmitter can be fitted.
The output signal is 4-20 mA, optionally assembling indicator.
- 3-digit LED-level display, output over 3 PNP level-switching outputs
- or 4-20mA

Electrical connection to the voltage supply and to one or several controllers, stored program controller or measuring instruments can take place with a standard two-core twisted cable. The cable can be of any length.
The types of connection can be freely selected; other types on request.
The device has to be installed by specialists only.
Level controller are resistant to: mineral oil, hydrous solution, phosphoric ester, triglyceride (rape oil), synthetic ester, polyclycols.

Max. viscosity 320mm²/S

Technical data

Nominal pressure	25bar max.
Float tube	Stainl. steel, max. L=6000 mm
	Stainl. steel,
Display	magnetic rotary display
Medium temperature	120°C max.
Medium density	0,72 kg/dm³ min.
Float	Stainl. steel MD25
Level contacts	bistable changeover contacts
NRA-W	60W - 250V AC/DC max
NRA-W-L	24/230V max (LED)
Current switch	1A max
Transmitter	12-30 VDC
Measuring range	4-20 mA = 0-100%
Contact pitch	7,5 / 15 mm
Linearity	0,5%
Load	RB= U-12V / 20mA

GOLDAMMER
REGELUNGSTECHNIK GMBH
SCHÖLLERSHEIDER STR. 15 PHONE (49) 2104/12093
P.O.BOX 10 02 17 FAX (49) 2104/12028
D-40802 METTMANN www.Goldammer-Regelungstechnik.com

NRA 40RS/...

Level controller for surface mounting

serial No. AM-GB- 202a | Date 10/19

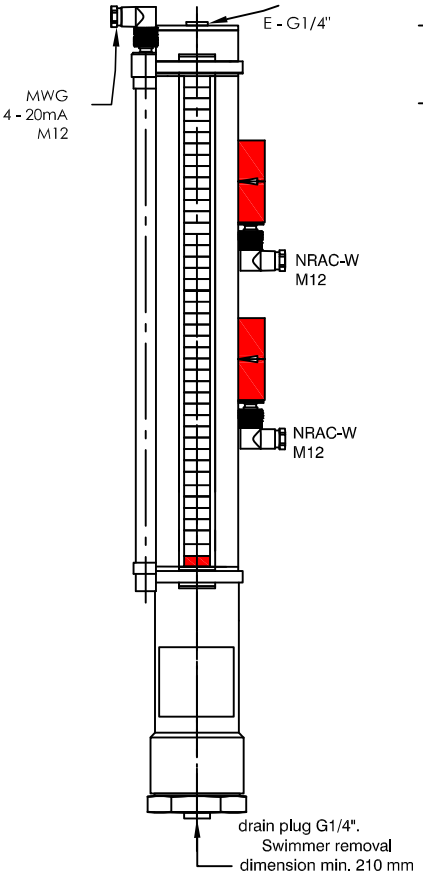

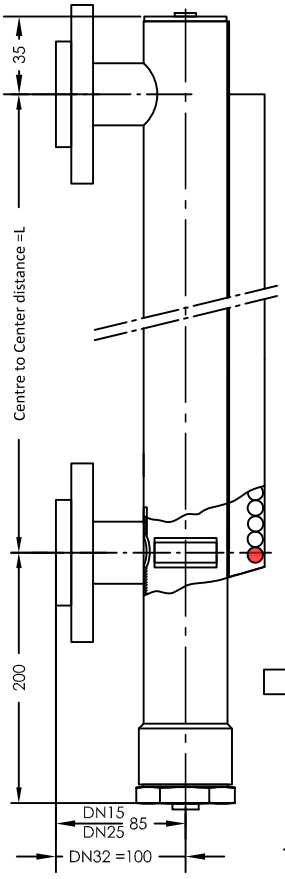

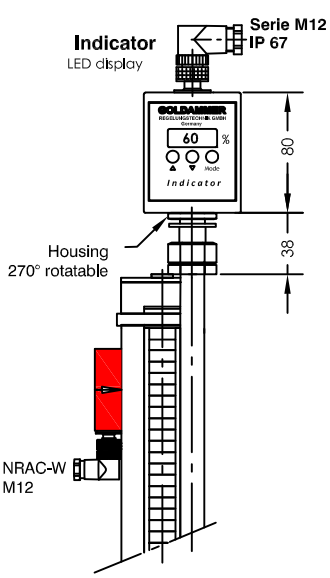

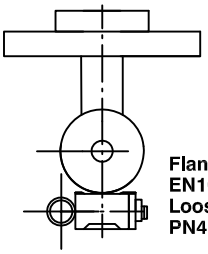

Flange according to
EN1092-1 type 11
Loose flange, smooth collar
PN40 DN15 / DN25

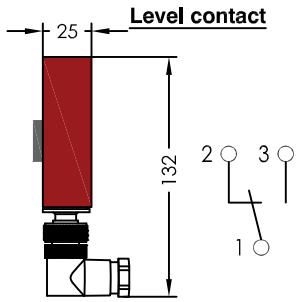

NRAC-W - M12

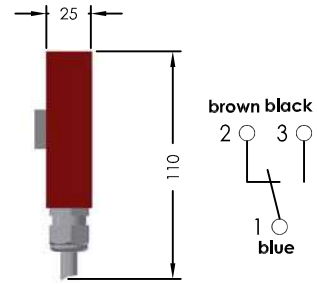

NRAC-W - Pg 9

Pin assigment

Pin Assignment
MWG

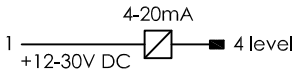

Pin Assignment
Indicator - 3PNP level

1 = +12V-30V DC
3 = GND
2 = L1 PNP
4 = L2 PNP
5 = L3 PNP

Pin Assignment
Indicator - level indicator

1 = +12V-30V DC
4 = 4 - 20mA
3 = GND

Order code

Specimen order

NRA 40RS/ 03 x 2000 - 3 / NRAC-W-M12 - MWG - 7.5 - I - G1/4" A - G1/4"E

Connection
01 Sleeve G1/2"
02 Sleeve G1"
03 Flange DN15
04 Flange DN25
10 Flange DN32
Centre distance=L in mm

Number of level contact
Type: NRAC-W-M12
NRAC-W-M12-LED
NRAC-W-Pg 9

Contact pitch
7.5 / 15 mm

Transmitter type MWG - 4-20mA

Drain G1/4" = A - Venting G1/4" = E
I = Indicator 3PNP - LED display
II= Indicator 4-20mA - LED display

Technical data

Description

The level controller type NRA 40RS/... is designed for surface mounting on containers as communicating vessels. Optical level height monitoring without external power supply via a magnetic rotary display.
By connecting infinitely adjustable, bistable electromagnetic changeover contacts to the visual indicating scale, various control options can be configured. On request contact type NRA-W-L with indicator light can be fitted. For continuous remote transmission, a transmitter can be fitted.
The output signal is 4-20 mA, optionally assembling indicator. - 3-digit LED-level display, output over 3 PNP level-switching outputs, - or 4-20mA
Electrical connection to the voltage supply and to one or several controllers, stored program controller or measuring instruments can take place with a standard two-core twisted cable. The cable can be of any length.
The types of connection can be freely selected; other types on request.
The device has to be installed by specialists only.
Level controller are resistant to: mineral oil, hydrous solution, phosphoric ester, triglyceride (rape oil), synthetic ester, polyclycols.
The level controllers are designed and tested according to the rule AD2000.
Quality assurance according to module H, H1.

Max. viscosity 320mm²/S

Connections Datasheet AM - GB - 204

Technical data

Nominal pressure	40bar max.
Float tube	Stainl. steel, max. L=6000 mm Stainl. steel, magnetic rotary display
Medium temperature	100°C max.
Medium density	0,8 kg/dm³ min.
Float	Ceramic MD160
Level contacts	bistable changeover contacts
NRAC-W	60W - 250V AC/DC max.
NRAC-W-L	24V max. (LED)
Current switch	1A max
Transmitter	12-30 VDC
Measuring range	4-20 mA = 0-100%
Contact pitch	7,5 / 15mm
Linearity	0,5%
Load	RB= U-12V / 20mA
*Indicator	Sheet IND-GB

GOLDAMMER
REGELUNGSTECHNIK GMBH
SCHÖLLERSHEIDER STR. 15
P.O.BOX 10 02 17
D-40802 METTMANN
PHONE (49) 2104/12093
FAX (49) 2104/12028
www.Goldammer-Regelungstechnik.com

NRA 40RS/...

Level controller for surface mounting with integrated stop valve

serial No. Date
AM-GB- 202b 10/19

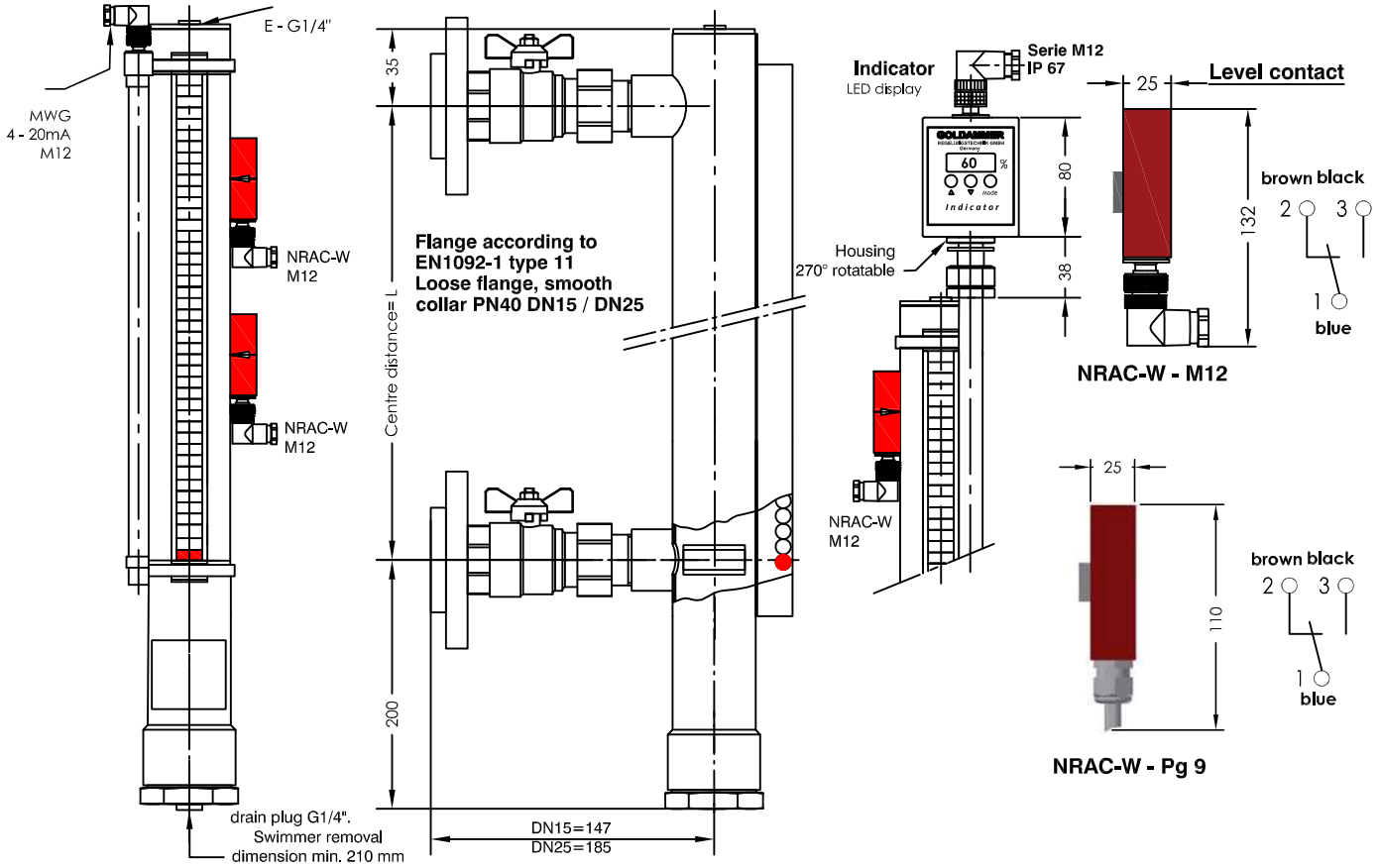

Pin Assignment

Pin Assignment
MWG

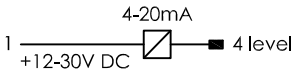

Pin Assignment
Indicator - 3PNP level

1 = +12V-30V DC
3 = GND
2 = L1 PNP
4 = L2 PNP
5 = L3 PNP

Pin Assignment
Indicator - level indicator

1 = +12V-30V DC
4 = 4 - 20mA
3 = GND

Order code

Specimen order

NRA 40RS/ 07 x 2000 - 3 / NRAC-W-M12 - MWG - 7.5 - I - G1/4" A - G1/4" E

Connection
07 Flange DN15
08 Flange DN25

Centre distance=L in mm

Number of level contact
Type: NRAC-W-M12
NRAC-W-M12-LED
NRAC-W-Pg 9

Contact pitch
7.5 / 15 mm

Drain screw G1/4" = A - Bleed screw G1/4" = E
I = Indicator 3PNP - LED display
II= Indicator 4-20mA - LED display

Transmitter type MWG - 4-20mA

Technical data

Description

The level controller type NRA 40RS/... is designed for surface mounting on containers as communicating vessels. Optical level height monitoring without external power supply via a magnetic rotary display.
By connecting infinitely adjustable, bistable electromagnetic changeover contacts to the visual indicating scale, various control options can be configured. On request contact type NRA-W-L with indicator light can be fitted. For continuous remote transmission, a transmitter can be fitted.
The output signal is 4-20 mA, optionally assembling indicator. - 3-digit LED-level display, output over 3 PNP level-switching outputs - or 4-20mA
Electrical connection to the voltage supply and to one or several controllers, stored program controller or measuring instruments can take place with a standard two-core twisted cable. The cable can be of any length.
The types of connection can be freely selected; other types on request.
The device has to be installed by specialists only.
Level controller are resistant to: mineral oil, hydrous solution, phosphoric ester, triglyceride (rape oil), synthetic ester, polyclycols.
The level controllers are designed and tested according to the rule AD2000.
Quality assurance according to module H, H1.

Max. viscosity 320mm²/S

Technical data

Nominal pressure	40bar max.
Float tube	Stainl. steel, max. L=6000 mm Stainl. steel, magnetic rotary display
Medium temperature	100°C max.
Medium density	0,8 kg/dm³ min.
Float	Ceramic MD160
Level contacts	bistable changeover contacts
NRAC-W	60W - 250V AC/DC max.
NRAC-W-L	24V max. (LED)
Current switch	1A max.
Transmitter	12-30 VDC
Measuring range	4-20 mA = 0-100%
Contact pitch	7,5 / 15mm
Linearity	0,5%
Load	RB= U-12V / 20mA
*Indicator	Sheet IND-GB

GOLDAMMER
REGELUNGSTECHNIK GMBH
SCHÖLLERSHEIDER STR. 15
P.O.BOX 10 02 17
D-40802 METTMANN
PHONE (49) 2104/12093
FAX (49) 2104/12028
www.Goldammer-Regelungstechnik.com

NRA 40RS/DN 32 x ...

Level controller for surface and Wall mounting

serial No. Date
AM-GB- 202c 10/19

Wall fixing

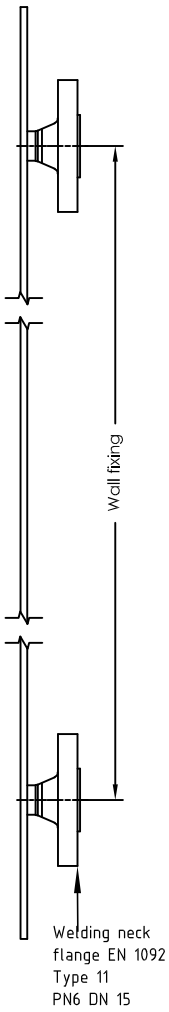

Level controller

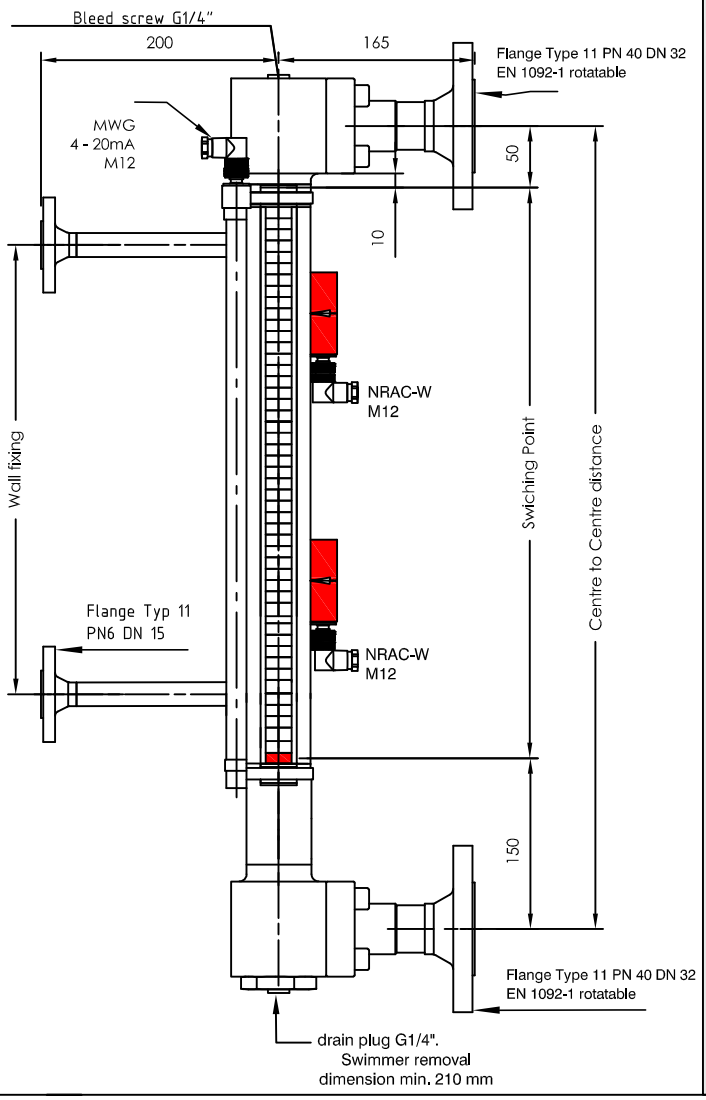

Pin assigment

Level contact

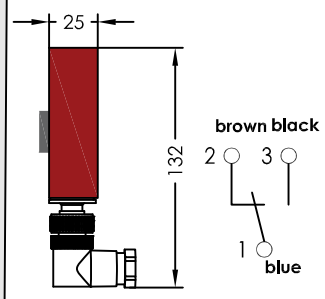

NRAC-W - M12

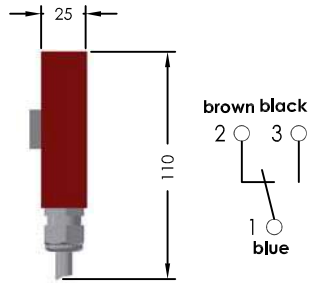

NRAC-W - Pg 9

MWG

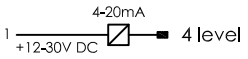

Order code

Specimen order

NRA 40RS / DN32 x 2000 - 3 / NRAC-W-M12 - MWG - 7.5 - G1/4" A - G1/4" E

- **Connection** DN32
- **Centre distance=L in mm**
- **Number of level contact**
  Type: NRAC-W-M12
  NRAC-W-M12-LED
  NRAC-W-Pg 9
- **Contact pitch** 7.5 / 15 mm
- **Transmitter type MWG - 4-20mA**
- **Drain G1/4" = A - Venting G1/4" = E**

Technical data

Description

The level controller type NRA 40RS/... is designed for surface mounting on containers as communicating vessels. Optical level height monitoring without external power supply via a magnetic rotary display.
By connecting infinitely adjustable, bistable electromagnetic changeover contacts to the visual indicating scale, various control options can be configured.
On request contact type NRA-W-L with indicator light can be fitted.
For continuous remote transmission, a transmitter can be fitted.
The output signal is 4-20 mA.
Electrical connection to the voltage supply and to one or several controllers, stored program controller or measuring instruments can take place with a standard two-core twisted cable. The cable can be of any length.
The types of connection can be freely selected; other types on request.
The device has to be installed by specialists only.
Level controller are resistant to: mineral oil, hydrous solution, phosphoric ester, triglyceride (rape oil), synthetic ester, polyclycols.
The level controllers are designed and tested according to the rule AD2000.
Quality assurance according to module H, H1.

Max. viscosity 320mm²/S

Technical data

Nominal pressure	40bar max.
Float tube	Stainl. steel, max. L=6000 mm
Connection parts	Steel S355J2C+N
Display	magnetic rotary display
Medium temperature	100°C max.
Medium density	0,8 kg/dm³ min.
Float	Ceramic MD160
Level contacts	bistable changeover contacts
NRAC-W	60W - 250V AC/DC max.
NRAC-W-L	24V max. (LED)
Current switch	1A max.
Transmitter	12-30 VDC
Measuring range	4-20 mA = 0-100%
Contact pitch	7,5 / 15mm
Linearity	0,5%
Load	RB= U-12V / 20mA

GOLDAMMER
REGELUNGSTECHNIK GMBH
SCHÖLLERSHEIDER STR. 15 PHONE (49) 2104/12093
P.O.BOX 10 02 17 FAX (49) 2104/12028
D-40802 METTMANN www.Goldammer-Regelungstechnik.com

NRA 25RS/DN50 x ...

Level controller for surface and wall mounting

serial No. Date
AM-GB- 202d 10/19

Wall mounting

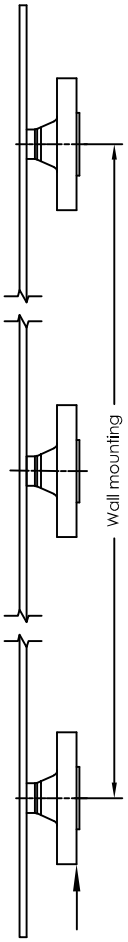

Level controller

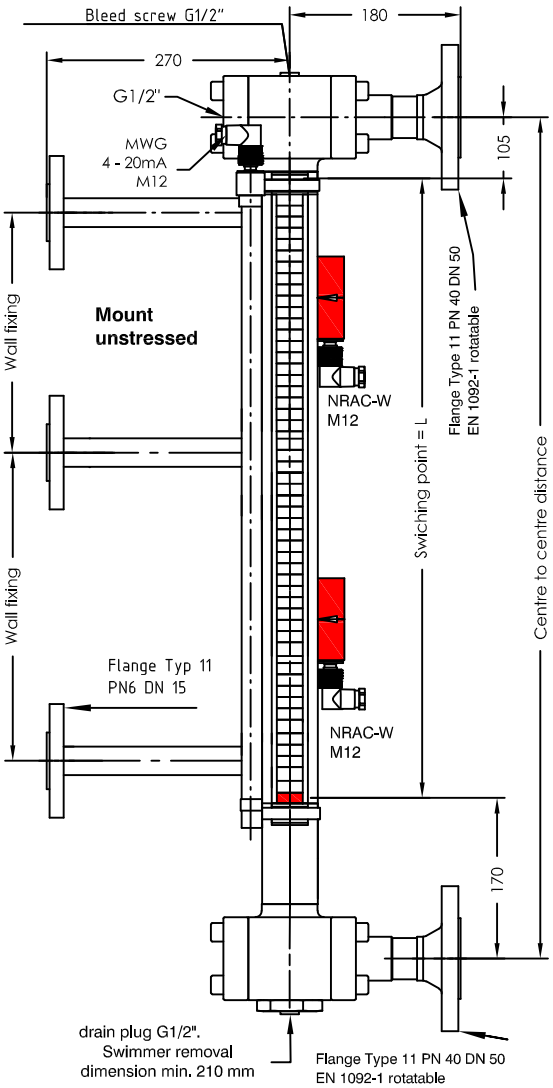

Pin assigment

Level contact

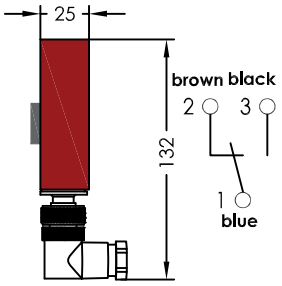

NRAC-W - M12

Direction wall mounting

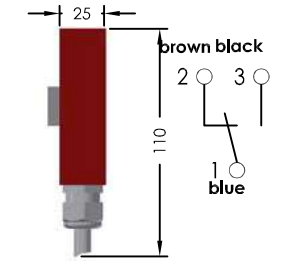

NRAC-W - Pg 9

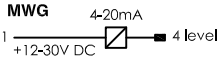

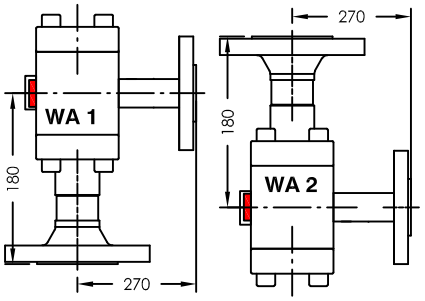

Order code

Specimen order

NRA 25RS/ DN50 x 2000 - 3 / NRAC-W-M12 - MWG - 7.5 - G1/2" A - G1/2" E - WA1

- **Connection** DN50
- **Centre distance=L in mm**
- **Number of level contact**
  Type: NRAC-W-M12
  NRAC-W-M12-LED
  NRAC-W-Pg 9
- **Transmitter type MWG - 4-20mA**
- **Contact pitch** 7.5 / 15 mm
- **Drain G1/2" = A - Venting G1/2" = E**
- **Wall direction**
  WA 1
  WA 2

Technical data

Description

The level controller type NRA 25RS/... is designed for surface mounting on containers as communicating vessels. Optical level height monitoring without external power supply via a magnetic rotary display.
By connecting infinitely adjustable, bistable electromagnetic changeover contacts to the visual indicating scale, various control options can be configured.
On request contact type NRA-W-L with indicator light can be fitted.
For continuous remote transmission, a transmitter can be fitted.
The output signal is 4-20 mA.
Electrical connection to the voltage supply and to one or several controllers, stored program controller or measuring instruments can take place with a standard two-core twisted cable. The cable can be of any length.
The types of connection can be freely selected; other types on request.
The device has to be installed by specialists only.
Level controller are resistant to: mineral oil, hydrous solution, phosphoric ester, triglyceride (rape oil), synthetic ester, polyclycols.
The level controllers are designed and tested according to the rule AD2000.
Quality assurance according to module H, H1.

Max. viscosity 320mm²/S

Technical data

Nominal pressure	25bar max.
Float tube	Stainl. steel, max. L=6000 mm
Connection parts	Steel S355J2C+N
Display	magnetic rotary display
Medium temperature	120°C max.
Medium density	0,72 kg/dm³ min.
Float	Stainl. steel MD 25
Level contacts	bistable changeover contacts
NRAC-W	60W - 250V AC/DC max.
NRAC-W-L	24V max. (LED)
Current switch	1A max.
Transmitter	12-30 VDC
Measuring range	4-20 mA = 0 -100%
Contact pitch	7,5 / 15mm
Linearity	0,5%
Load	RB= U-12V / 20mA

GOLDAMMER
REGELUNGSTECHNIK GMBH
SCHÖLLERSHEIDER STR. 15 PHONE (49) 2104/12093
P.O.BOX 10 02 17 FAX (49) 2104/12028
D-40802 METTMANN www.Goldammer-Regelungstechnik.com

NRA 63RS/... NRA 100RS/...

Level controller for surface mounting

serial No. Date
AM-GB- 203a 10/19

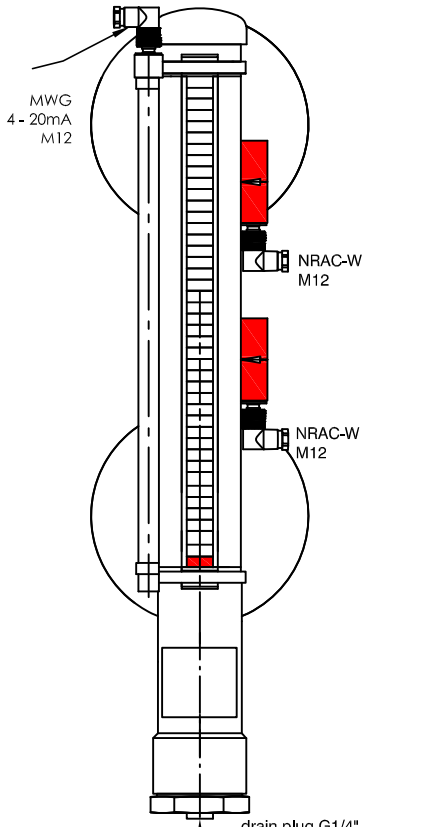

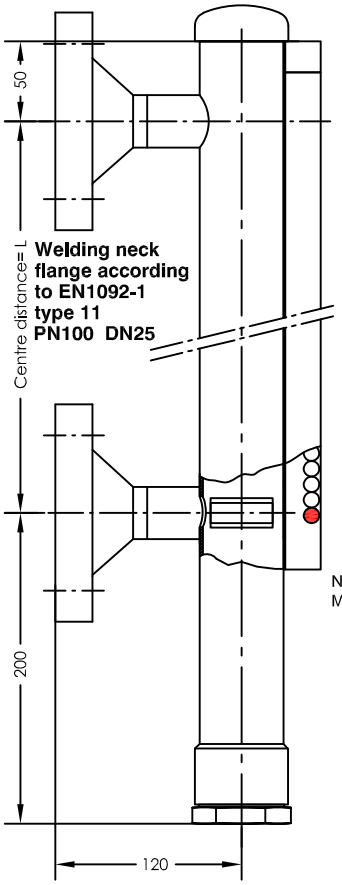

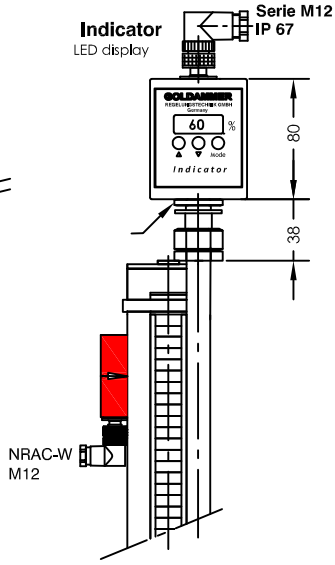

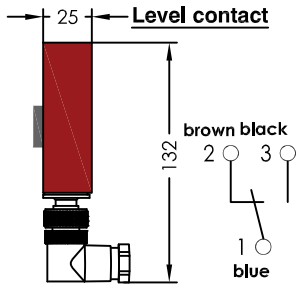

NRAC-W - M12

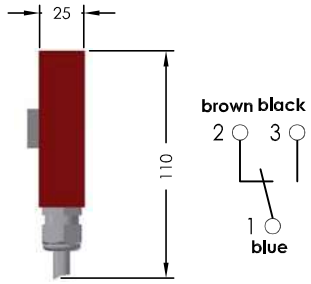

NRAC-W - Pg 9

Pin Assignment

Pin Assignment
MWG

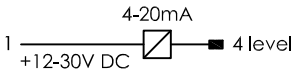

Pin Assignment
Indicator - 3PNP level

1 = +12V-30V DC
3 = GND
2 = L1 PNP
4 = L2 PNP
5 = L3 PNP

Pin Assignment
Indicator - level indicator

1 = +12V-30V DC
4 = 4 - 20mA
3 = GND

Order code

Specimen order

NRA 63RS / 04 x 2000 - 3/NRAC-W-M12 - MWG - 7.5 - I - G1/4" A

NRA 63RS
NRA 100RS

Connection
04 Flange DN25
10 Flange DN32

Centre distance=L in mm

Number of level contact
Type: NRAC-W-M12
NRAC-W-M12-LED
NRAC-W-Pg 9

Transmitter type MWG - 4-20mA

Contact pitch
7.5 / 15 mm

I = Indicator 3PNP - LED display
II= Indicator 4-20mA - LED display

Drain G1/4" = A

Technical data

Description

The level controller type NRA 63RS/..NRA 100RS/.. is designed for surface mounting on containers as communicating vessels. Optical level height monitoring without external power supply via a magnetic rotary display. By connecting infinitely adjustable, bistable electromagnetic changeover contacts to the visual indicating scale, various control options can be configured. On request contact type NRA-W-L with indicator light can be fitted. For continuous remote transmission, a transmitter can be fitted. The output signal is 4-20 mA, optionally assembling indicator.

- 3-digit LED-level display, output over 3 PNP level-switching outputs
- or 4-20mA

Electrical connection to the voltage supply and to one or several controllers, stored program controller or measuring instruments can take place with a standard two-core twisted cable. The cable can be of any length.
The types of connection can be freely selected; other types on request.
The device has to be installed by specialists only.
Level controller are resistant to: mineral oil, hydrous solution, phosphoric ester, triglyceride (rape oil), synthetic ester, polyclycols.
The level controllers are designed and tested according to the rule AD2000.
Quality assurance according to module H, H1.

Max. viscosity 320mm²/S

Technical data

Nominal pressure	63bar / 100bar max.
Float tube	according to nominal pressure Stainl. steel, max. L=6000 mm
Connecting parts	Steel S355J2C+N
Display	magnetic rotary display
Medium temperature	80°C max.
Medium density	0,8 kg/dm³ min.
Float	Ceramic MD160
Level contacts	bistable changeover contacts
NRAC-W	60W - 250V AC/DC max.
NRAC-W-L	24V max. (LED)
Current switch	1A max.
Transmitter	12-30 VDC
Measuring range	4-20 mA = 0-100%
Contact pitch	7,5 /15mm
Linearity	0,5%
Load	RB= U-12V / 20mA
*Indicator	Sheet IND-GB

GOLDAMMER
REGELUNGSTECHNIK GMBH
SCHÖLLERSHEIDER STR. 15
P.O.BOX 10 02 17
D-40802 METTMANN
PHONE (49) 2104/12093
FAX (49) 2104/12028
www.Goldammer-Regelungstechnik.com

NRA 160RS/AVIT...

Level controller for surface mounting

serial No. Date
AM-GB- 203b 10/19

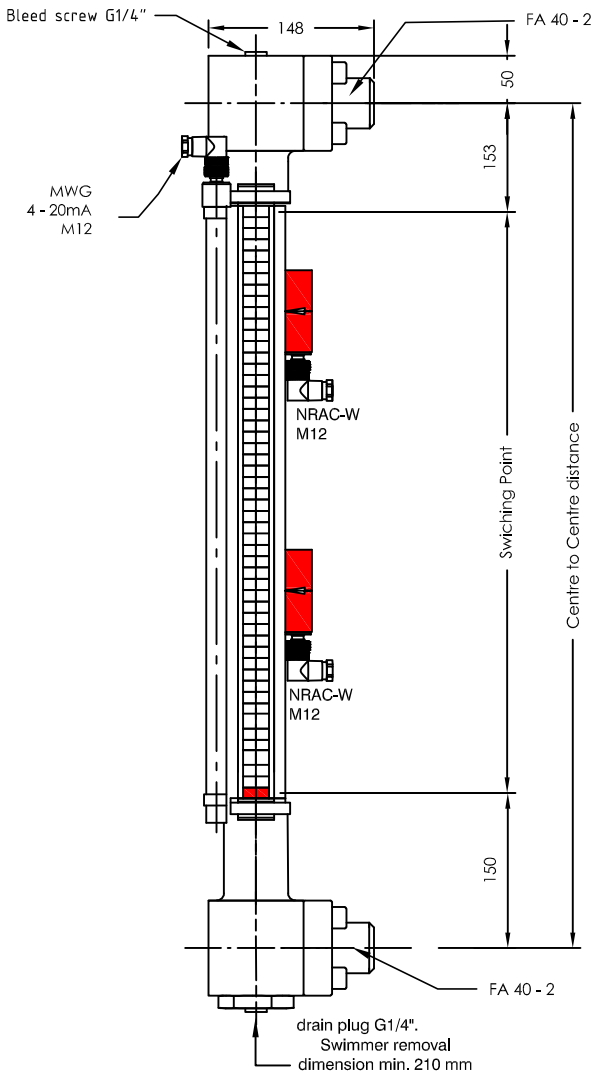

Pin assigment

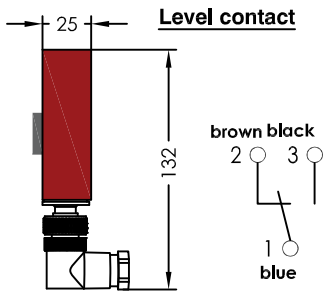

NRAC-W - M12

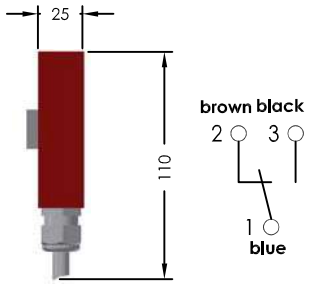

NRAC-W - Pg 9

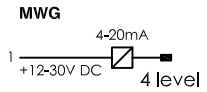

Order code

Specimen order

NRA 160RS / AVIT x 2000 - 3 / NRAC-W-M12 - MWG - 7.5 - G1/4" A - G1/4" E

- Centre distance=L in mm
- Number of level contact
- Type: NRAC-W-M12, NRAC-W-M12-LED, NRAC-W-Pg 9
- Transmitter type MWG - 4-20mA
- Contact pitch: 7.5 / 15 mm
- Drain G1/4" = A - Venting G1/4" = E

Technical data

Description

The level controller type NRA 160RS/... is designed for surface mounting on containers as communicating vessels. Optical level height monitoring without external power supply via a magnetic rotary display.
By connecting infinitely adjustable, bistable electromagnetic changeover contacts to the visual indicating scale, various control options can be configured.
On request contact type NRA-W-L with indicator light can be fitted.
For continuous remote transmission, a transmitter can be fitted.
The output signal is 4-20 mA.

Electrical connection to the voltage supply and to one or several controllers, stored program controller or measuring instruments can take place with a standard two-core twisted cable. The cable can be of any length.
The types of connection can be freely selected; other types on request.
The device has to be installed by specialists only.
Level controller are resistant to: mineral oil, hydrous solution, phosphoric ester, triglyceride (rape oil), synthetic ester, polyclycols.
The level controllers are designed and tested according to the rule AD2000.
Quality assurance according to module H, H1.

Max. viscosity 320mm²/S

Technical data

Nominal pressure	160bar max.
Float tube	Stainl. steel, max. L=6000 mm
Connection parts	Steel S355J2C+N
Display	magnetic rotary display
Medium temperature	50°C max.
Medium density	0,8 kg/dm³ min.
Float	Ceramic MD160
Level contacts	bistable changeover contacts
NRAC-W	60W - 250V AC/DC max.
NRA-W-L	24V max. (LED)
Current switch	1A max.
Transmitter	12-30 VDC
Measuring range	4-20 mA = 0-100%
Contact pitch	7,5 / 15mm
Linearity	0,5%
Load	RB= U-12V / 20mA

GOLDAMMER
REGELUNGSTECHNIK GMBH
SCHÖLLERSHEIDER STR. 15 PHONE (49) 2104/12093
P.O.BOX 10 02 17 FAX (49) 2104/12028
D-40802 METTMANN www.Goldammer-Regelungstechnik.com

NRA 250RS/AVIT ...

Level controller for surface mounting

serial No. Date
AM-GB- 203c 10/19

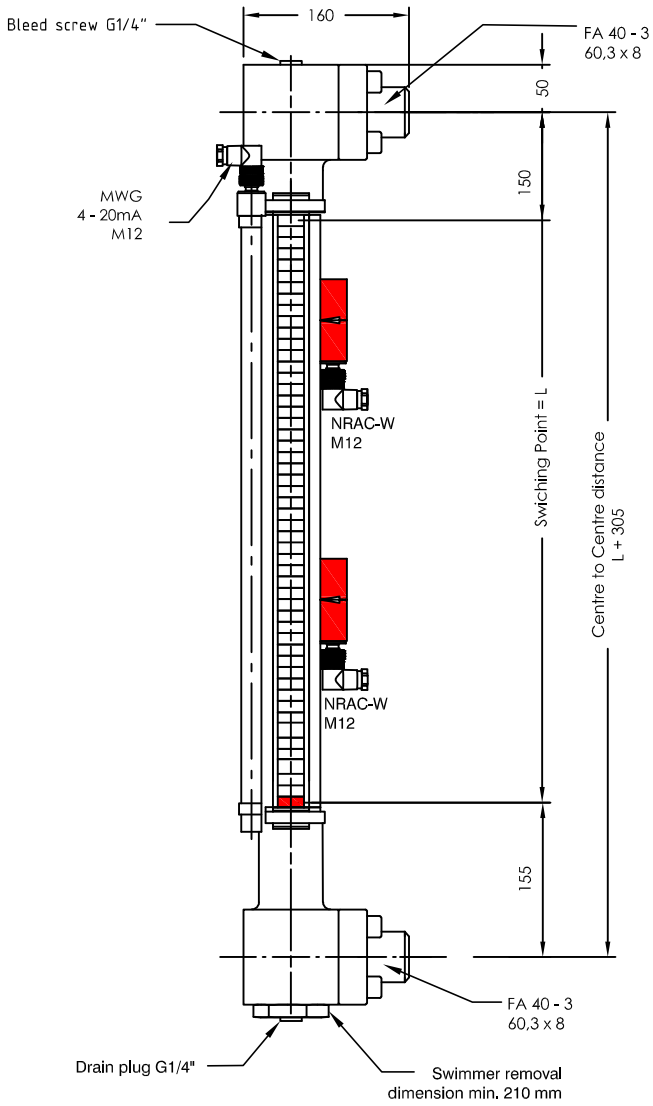

Pin assigment

Level contact

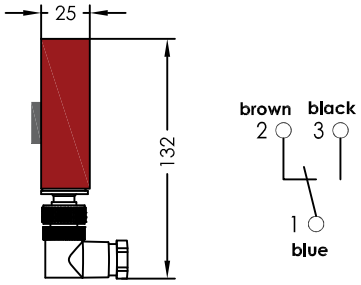

NRAC-W - M12

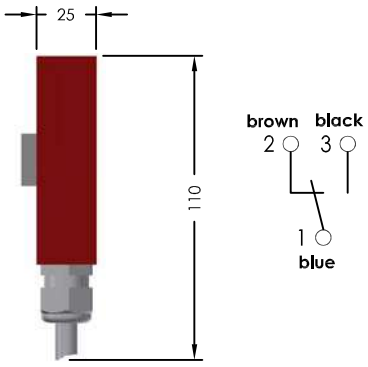

NRAC-W - Pg 9

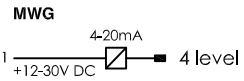

Order code

Specimen order

NRA 250RS / AVIT x 2000 - 3/NRAC-W-M12 - MWG - 7.5 - G1/4" A - G1/4" E

- x 2000: Centre distance=L in mm
- 3/NRAC-W-M12: Number of level contact; Type: NRAC-W-M12, NRAC-W-M12-LED, NRAC-W-Pg 9
- MWG: Transmitter type MWG - 4-20mA
- 7.5: Contact pitch 7.5 / 15 mm
- G1/4" A - G1/4" E: Drain G1/4" = A - Venting G1/4" = E

Technical data

Description

The level controller type NRA 250RS/... is designed for surface mounting on containers as communicating vessels. Optical level height monitoring without external power supply via a magnetic rotary display.
By connecting infinitely adjustable, bistable electromagnetic changeover contacts to the visual indicating scale, various control options can be configured.
On request contact type NRA-W-L with indicator light can be fitted.
For continuous remote transmission, a transmitter can be fitted.
The output signal is 4-20 mA.

Electrical connection to the voltage supply and to one or several controllers, stored program controller or measuring instruments can take place with a standard two-core twisted cable. The cable can be of any length.
The types of connection can be freely selected; other types on request.
The device has to be installed by specialists only.
Level controller are resistant to: mineral oil, hydrous solution, phosphoric ester, triglyceride (rape oil), synthetic ester, polyclycols.
The level controllers are designed and tested according to the rule AD2000.
Quality assurance according to module H, H1.

Max. viscosity 320mm²/S

Technical data

Nominal pressure	250bar max.
Float tube	Stainl. steel, max. L=6000 mm
Connection parts	Steel S355J2C+N
Display	magnetic rotary display
Medium temperature	50°C max.
Medium density	0,8 kg/dm³ min.
Float	Ceramic MD250
Level contacts	bistable changeover contacts
NRAC-W	60W - 250V AC/DC max
NRAC-W-L	24V max. (LED)
Current switch	1A max.
Transmitter	12-30 VDC
Measuring range	4-20 mA = 0-100%
Contact pitch	7,5 / 15mm
Linearity	0,5%
Load	RB= U-12V / 20mA

GOLDAMMER
REGELUNGSTECHNIK GMBH
SCHÖLLERSHEIDER STR. 15 PHONE (49) 2104/12093
P.O.BOX 10 02 17 FAX (49) 2104/12028
D-40802 METTMANN www.Goldammer-Regelungstechnik.com

NRA 320RS/AVIT ...

Level controller for surface mounting

serial No. Date
AM-GB- 203d 10/19

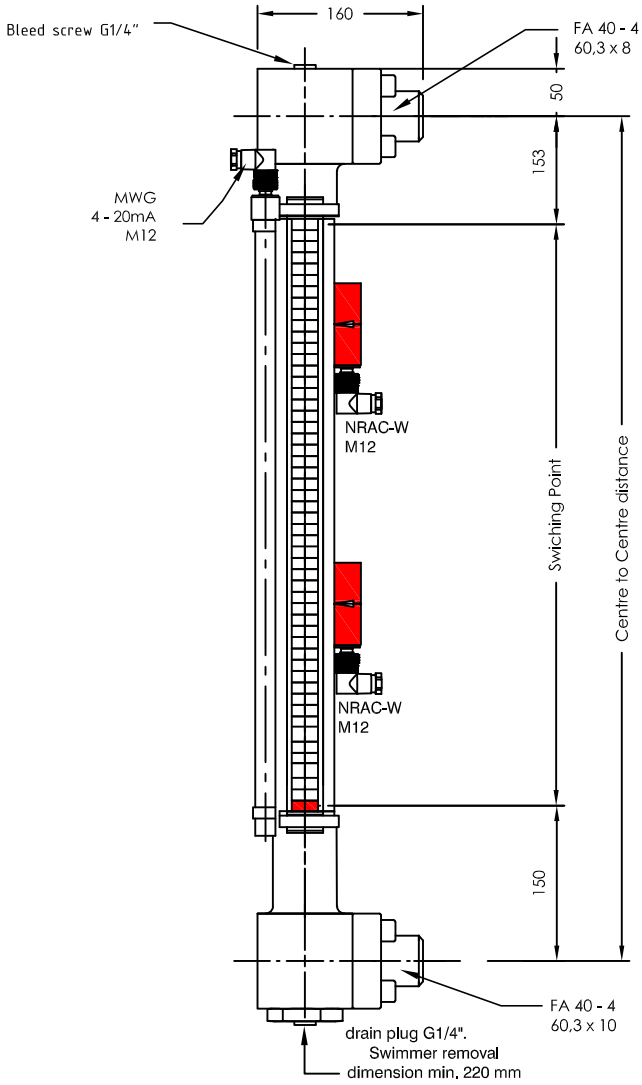

Pin assigment

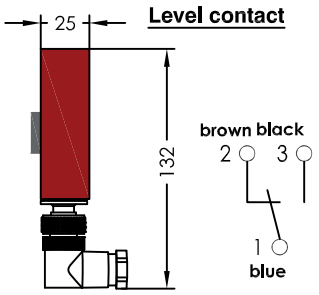

NRAC-W - M12

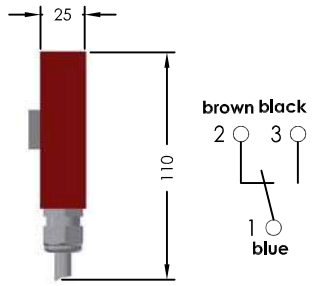

NRAC-W - Pg 9

MWG

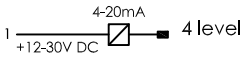

Order code

Specimen order

NRA 320RS / AVIT x 2000 - 3 / NRAC-W-M12 - MWG - 7.5 - G1/4" A - G1/4" E

Centre distance=L in mm

Number of level contact
Type: NRAC-W-M12
NRAC-W-M12-LED
NRAC-W-Pg 9

Contact pitch
7.5 / 15 mm

Transmitter type MWG - 4-20mA

Drain G1/4" = A - Venting G1/4" = E

Technical data

Description

The level controller type NRA 320RS/... is designed for surface mounting on containers as communicating vessels. Optical level height monitoring without external power supply via a magnetic rotary display.
By connecting infinitely adjustable, bistable electromagnetic changeover contacts to the visual indicating scale, various control options can be configured.
On request contact type NRA-W-L with indicator light can be fitted.
For continuous remote transmission, a transmitter can be fitted.
The output signal is 4-20 mA.

Electrical connection to the voltage supply and to one or several controllers, stored program controller or measuring instruments can take place with a standard two-core twisted cable. The cable can be of any length.
The types of connection can be freely selected; other types on request.
The device has to be installed by specialists only.
Level controller are resistant to: mineral oil, hydrous solution, phosphoric ester, triglyceride (rape oil), synthetic ester, polyclycols.
The level controllers are designed and tested according to the rule AD2000.
Quality assurance according to module H, H1.

Max. viscosity 320mm²/S

Technical data

Nominal pressure	320bar max.
Float tube	Stainl. steel, max. L=6000 mm
Connection parts	Steel S355J2C+N
Display	magnetic rotary display
Medium temperature	50°C max.
Medium density	0,8 kg/dm³ min.
Float	Ceramic MD320
Level contacts	bistable changeover contacts
NRA-W	60W - 250V AC/DC max
NRA-W-L	24/230V max (LED)
Current switch	1A max
Transmitter	12-30 VDC
Measuring range	4-20 mA = 0-100%
Contact pitch	7,5 / 15mm
Linearity	0,5%
Load	RB= U-12V / 20mA

GOLDAMMER
REGELUNGSTECHNIK GMBH
SCHÖLLERSHEIDER STR. 15 PHONE (49) 2104/12093
P.O.BOX 10 02 17 FAX (49) 2104/12028
D-40802 METTMANN www.Goldammer-Regelungstechnik.com

NRA 400RS/AVIT x ...

Level controller for surface mounting

serial No. Date
AM-GB- 203e 10/19

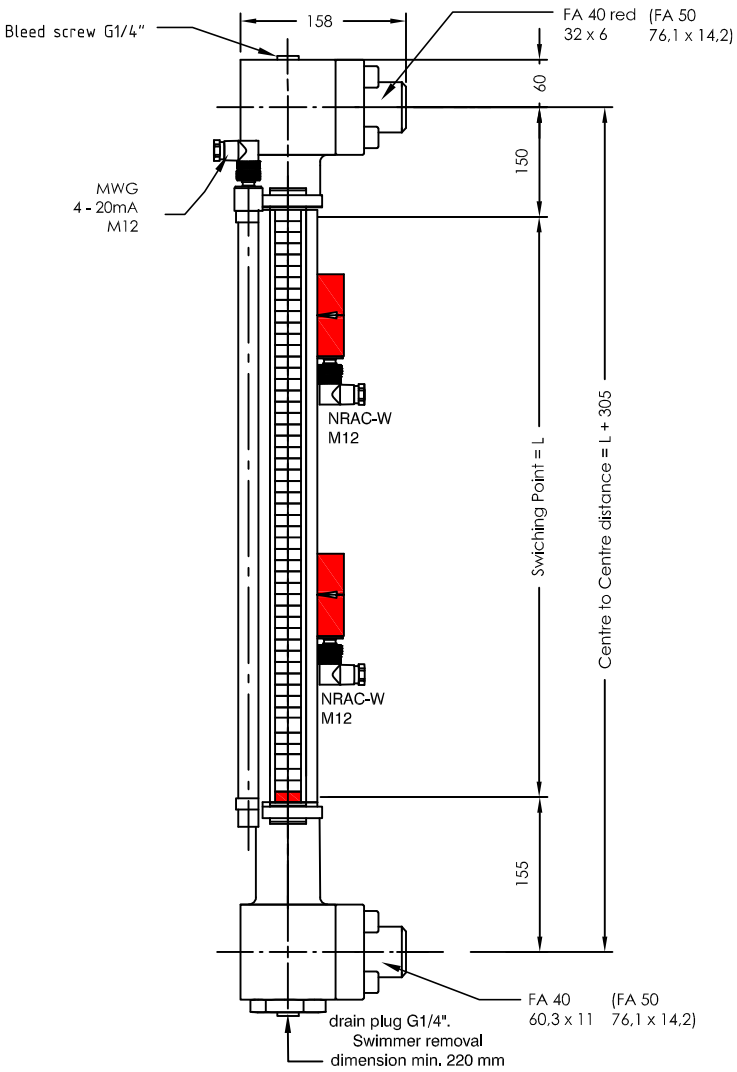

Pin assigment

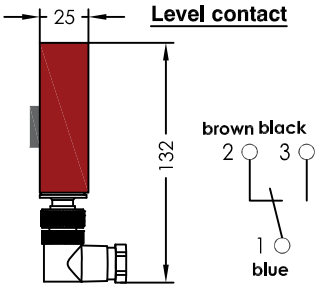

NRAC-W - M12

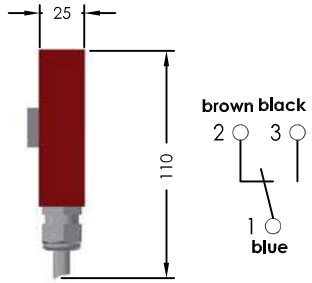

NRAC-W - Pg 9

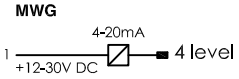

Order code

Specimen order

NRA 400RS / AVIT x 2000 - 3 / NRAC-W-M12 - MWG - 7.5 - G1/4" A - G1/4" E

- x 2000: Centre distance=L in mm
- 3 / NRAC-W-M12: Number of level contact; Type: NRAC-W-M12, NRAC-W-M12-LED, NRAC-W-Pg 9
- MWG: Transmitter type MWG - 4-20mA
- 7.5: Contact pitch 7.5 / 15 mm
- G1/4" A - G1/4" E: Drain G1/4" = A - Venting G1/4" = E

Technical data

Description

The level controller type NRA 400RS/... is designed for surface mounting on containers as communicating vessels. Optical level height monitoring without external power supply via a magnetic rotary display.
By connecting infinitely adjustable, bistable electromagnetic changeover contacts to the visual indicating scale, various control options can be configured.
On request contact type NRA-W-L with indicator light can be fitted.
For continuous remote transmission, a transmitter can be fitted.
The output signal is 4-20 mA.
Electrical connection to the voltage supply and to one or several controllers, stored program controller or measuring instruments can take place with a standard two-core twisted cable. The cable can be of any length.
The types of connection can be freely selected; other types on request.
The device has to be installed by specialists only.
Level controller are resistant to: mineral oil, hydrous solution, phosphoric ester, triglyceride (rape oil), synthetic ester, polyclycols.
The level controllers are designed and tested according to the rule AD2000.
Quality assurance according to module H, H1.

Max. viscosity 320mm²/S

Technical data

Nominal pressure	400bar max.
Float tube	Stainl. steel, max. L=6000 mm
Connection parts	Steel S355J2C+N
Display	magnetic rotary display
Medium temperature	50°C max.
Medium density	0,8 kg/dm³ min.
Float	Ceramic MD400
Level contacts	bistable changeover contacts
NRAC-W	60W - 250V AC/DC max.
NRAC-W-L	24V max. (LED)
Current switch	1A max.
Transmitter	12-30 VDC
Measuring range	4-20 mA = 0-100%
Contact pitch	7,5 / 15mm
Linearity	0,5%
Load	RB= U-12V / 20mA

GOLDAMMER
REGELUNGSTECHNIK GMBH
SCHÖLLERSHEIDER STR. 15 PHONE (49) 2104/12093
P.O.BOX 10 02 17 FAX (49) 2104/12028
D-40802 METTMANN www.Goldammer-Regelungstechnik.com

Connection variants
Level controller for surface mounting

serial No.	Date
AM-GB- 204	11/16

Flange connection available according to ASME / ANSI B16.5

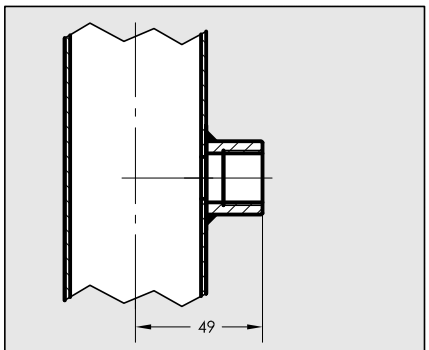

01 sleeve G1/2"

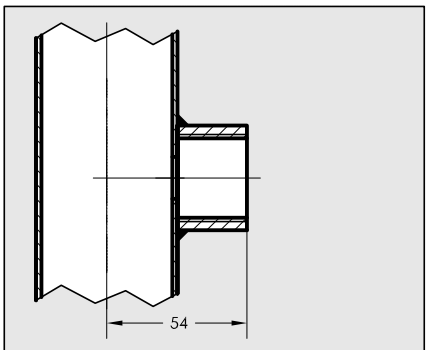

02 sleeve G1"

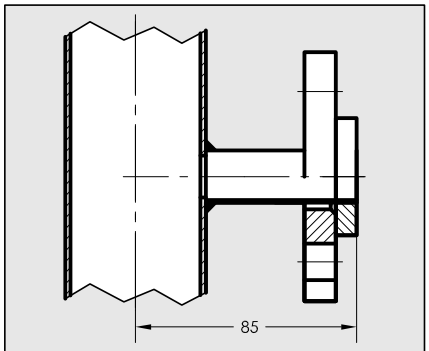

03 flange DN15 - EN1092-1 type11

Loose flange, smooth coller

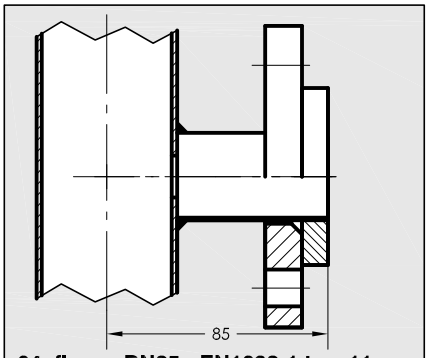

04 flange DN25 - EN1092-1 type11

Loose flange, smooth coller

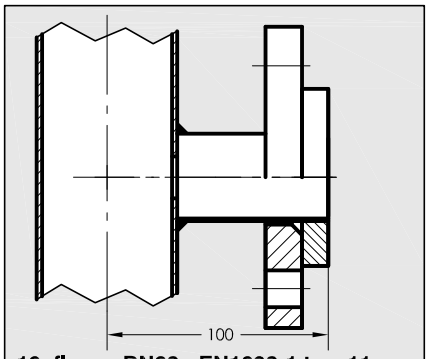

10 flange DN32 - EN1092-1 type11

Loose flange, smooth coller

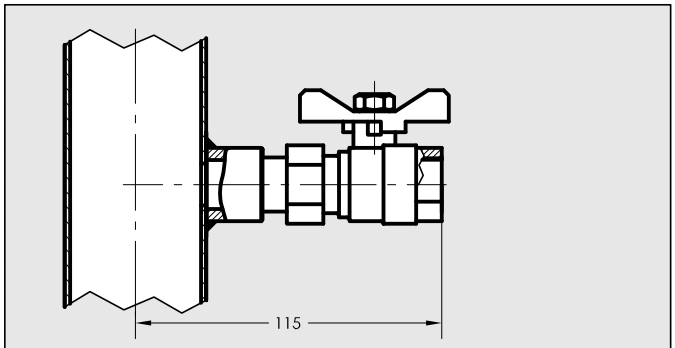

05 ball valve G1/2 "

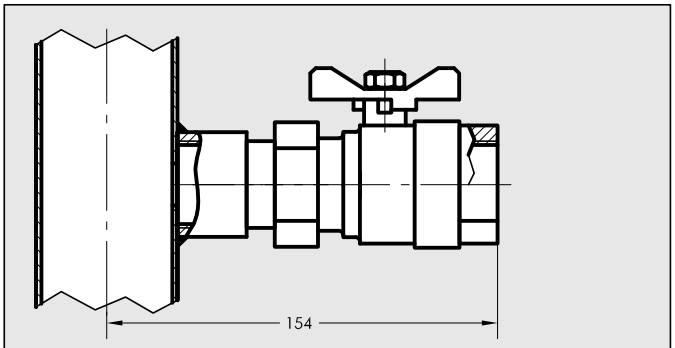

06 ball valve G1 "

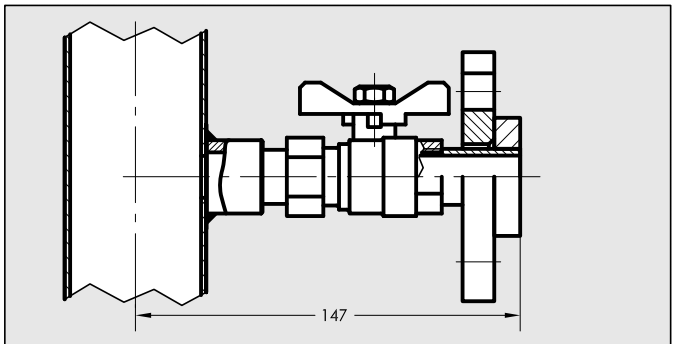

07 ball valve / flange DN15 - EN1092-1 type11

Loose flange, smooth coller

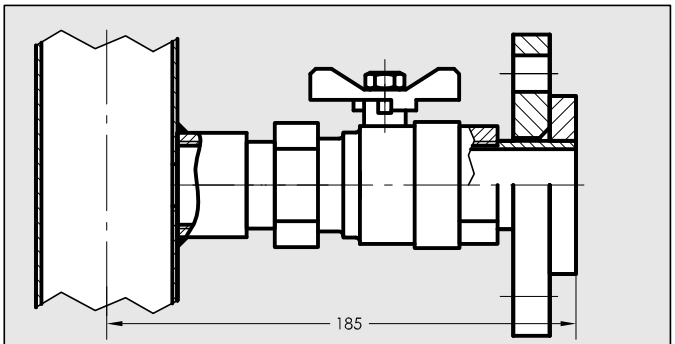

08 ball valve / flange DN25 - EN1092-1 type11

Loose flange, smooth coller

GOLDAMMER
REGELUNGSTECHNIK GMBH

SCHÖLLERSHEIDER STR. 15 PHONE (49) 2104/12093
P.O.BOX 10 02 17 FAX (49) 2104/12028
D-40802 METTMANN www.Goldammer-Regelungstechnik.com

Mounting variations
Level controller for surface mounting

serial No.	Date
AM-GB- 205	08/16

Drain G1/4 " - A

Venting G1/4 " - E

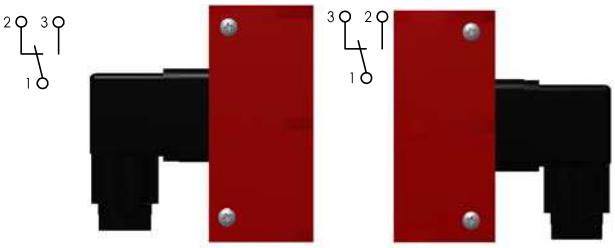

mounting left

mounting right

Clamping assembly NRA-W

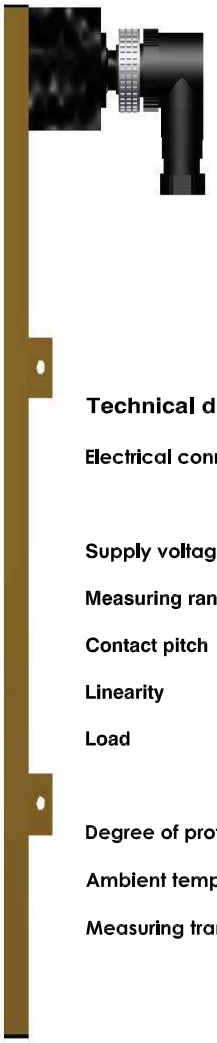

Technical data

Electrical connection	Plug socket connector Connector M12
Supply voltage	12 - 30 VDC
Measuring range	4 - 20mA = 0 - 100%
Contact pitch	7,5 / 15mm
Linearity	0,5%
Load	RB= U-12V / 20mA
Degree of protection	IP 67 Pg 9
Ambient temperature	-40 - 100°C
Measuring transducer	Brass / stainless steel

MWG 4-20mA

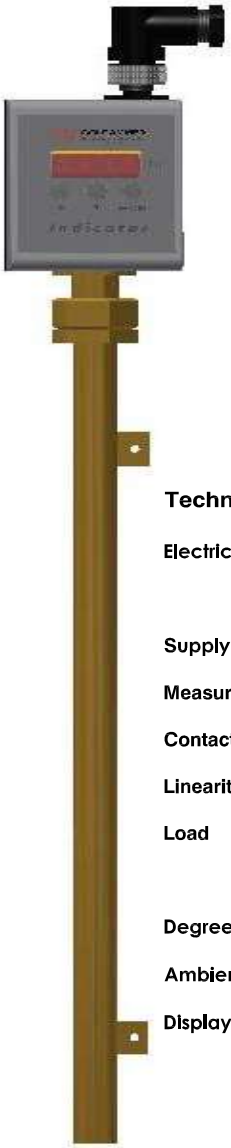

Technical data

Electrical connection	Plug socket connector M12
Supply voltage	12 - 30 VDC
Measuring range	4 - 20mA = 0 - 100%
Contact pitch	7,5 / 15mm
Linearity	0,5%
Load	RB= U-12V / 20mA
Degree of protection	IP 67 Pg 9
Ambient temperature	-20 - 100°C
Display	LED 3-digit, 0 - 100% optionally 3 x PNP or 4 - 20mA

Indicator with LED-display

GOLDAMMER
REGELUNGSTECHNIK GMBH

SCHÖLLERSHEIDER STR. 15 PHONE (49) 2104/12093
P.O.BOX 10 02 17 FAX (49) 2104/12028
D-40802 METTMANN www.Goldammer-Regelungstechnik.com

Datasheet - Contact NRA-W

serial No.	Date
AM-GB- 205/1	08/17

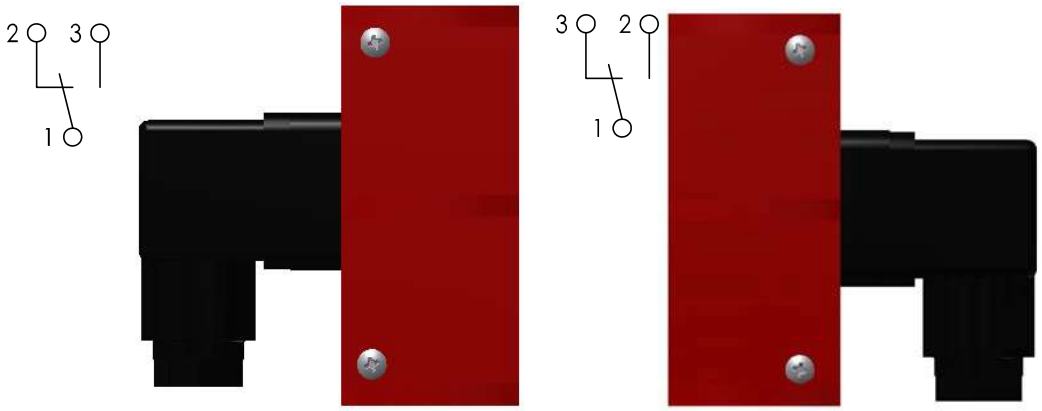

Assembly left

Assembly right

Clamp mounting contact NRA-W

Electrical and machanical parameters.
additional damped vibration stocking of the Contact unit.

Daten			
Kontaktform			C
Kontaktmaterial			Rh
Schaltvermögen	max.	W/VA	60
Schaltspannung	max.	Vac/dc	400
Schaltstrom	max.	A	1.0
Dauergrenzstrom	max.	A	2.0
Spannungsfestigkeit	min.	Vdc	1000
Durchgangswiderstand	max.	m Ohm	100
Isolationswiderstand	min.	Ohm	1E9
Ansprecherregung		AW/AT	17-50
Rückfallerregung		AW/AT	17-40
Schalt ohne Prellzeit		ms	4.0
Prellzeit		ms	0.5
Rückfallzeit	max.	ms	0.15
Resonanzfrequenz	typ.	Hz	1200
Arbeitsfrequenz	max.	Hz	100
Vibrationsfestigkeit	39g	Hz	2000
Stoßfestigkeit	11ms	g	50
Kapazität	Typ	pF	1.0
Betriebstemperatur		°C	-40...+150

Die Lebensdauer der Niveaukontakte beträgt bei maximaler Belastung 10^5...10^6 Schaltspiele. Die mechanische Lebensdauererwartung beträgt mindestens 10^9 Schaltspiele.

Parameters			
Contact			C
Contact material			Rh
Switching capacity	max.	W/VA	60
Switching voltage	max.	Vac/dc	400
Switching current	max.	A	1.0
Carring current	max.	A	2.0
Dielectic strength	min.	Vdc	1000
Contact resistance	max.	m Ohm	1 00
Insulation resistance	min.	Ohm	1E9
Pull-in sensitivity		AW/AT	17-50
Drop-out sensitivity		AW/AT	17-40
Switching time w/o bounce		ms	4.0
Bounce time		ms	0.5
Release time	max.	ms	0.15
Resonant frequency	typ.	Hz	1200
Oparating frequency	max.	Hz	100
Vibration	39g	Hz	2000
Shock	11ms	g	50
Capacitance	Typ	pF	1.0
Oparating temperatur	°C		-40...+150

The life span of the level contacts amounts by maximum charging 10^5...10^6 switching charges. The mechanical life span amounts at least 10^9 switching charges.

GOLDAMMER
REGELUNGSTECHNIK GMBH

SCHÖLLERSHEIDER STR. 15 PHONE (49) 2104/12093
P.O.BOX 10 02 17 FAX (49) 2104/12028
D-40802 METTMANN www.Goldammer-Regelungstechnik.com

Datasheet - Features Transmitter 4-20mA

serial No.	Date
AM-GB- 205/2	08/16

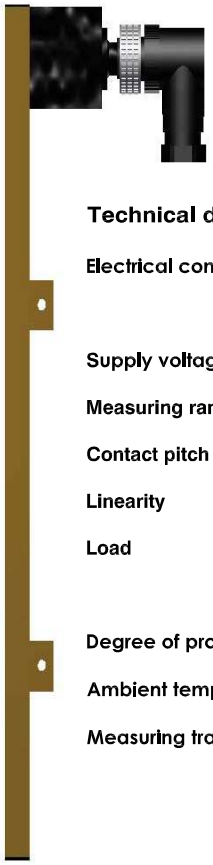

Technical data

Electrical connection	Plug socket connector
	Connector M12
Supply voltage	12 V - 30 VDC
Measuring range	4 - 20mA = 0 - 100%
Contact pitch	7,5 /15 mm
Linearity	0,5%
Load	RB= U-12V / 20mA
Degree of protection	IP 67 Pg 9
Ambient temperature	-40 - 100°C
Measuring transducer	Brass / stainless steel

MWG 4-20mA

Technical data

Electrical connection	Plug socket
	connector M12
Supply voltage	12 V - 30 VDC
Measuring range	4 - 20mA = 0 - 100%
Contact pitch	7,5 /15 mm
Linearity	0,5%
Load	RB= U-12V / 20mA
Degree of protection	IP 67 Pg 9
Ambient temperature	-20 - 100°C
Display	LED 3-digit, 0 - 100%
	optionally 3 x PNP
	or 4 - 20mA

Indicator with LED-display

The reed switch - Transmitter and Indicator with LED display is characterized by a stable behavior towards mechanical interference sources.

During the measuring process there are always 2-3 reed switches of the measuring chain by the float-magnetized system closed and therefor a resistance signal is produced. Additional to that, the measuring chain installation is cushioned.

The built 2 conductor transmitter transmits the signal proportional to the level- height in to 4-20mA.

GOLDAMMER
REGELUNGSTECHNIK GMBH

SCHÖLLERSHEIDER STR. 15 PHONE (49) 2104/12093
P.O.BOX 10 02 17 FAX (49) 2104/12028
D-40802 METTMANN www.Goldammer-Regelungstechnik.com

Level controller variants up to PN 400

Level controller for surface mounting

serial No. Date
AM-GB- 205/3 02/17

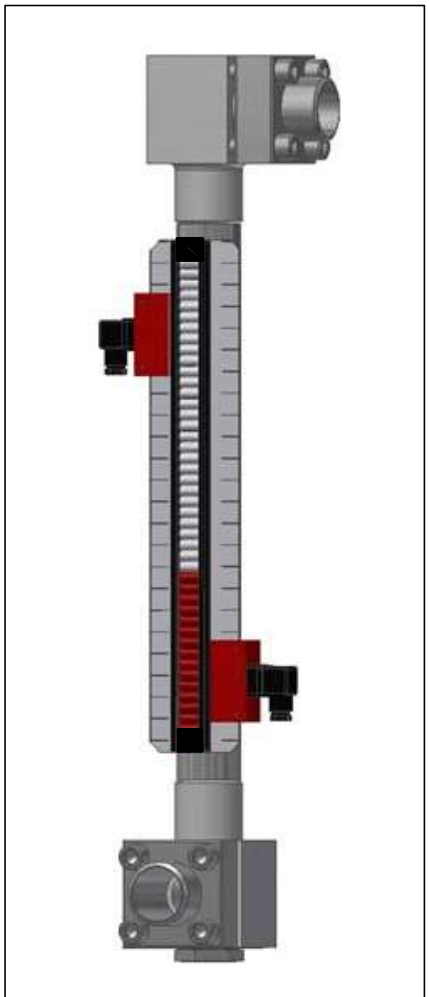

NRA 160RS/ 250RS/ 320RS/ 400RS/AVIT

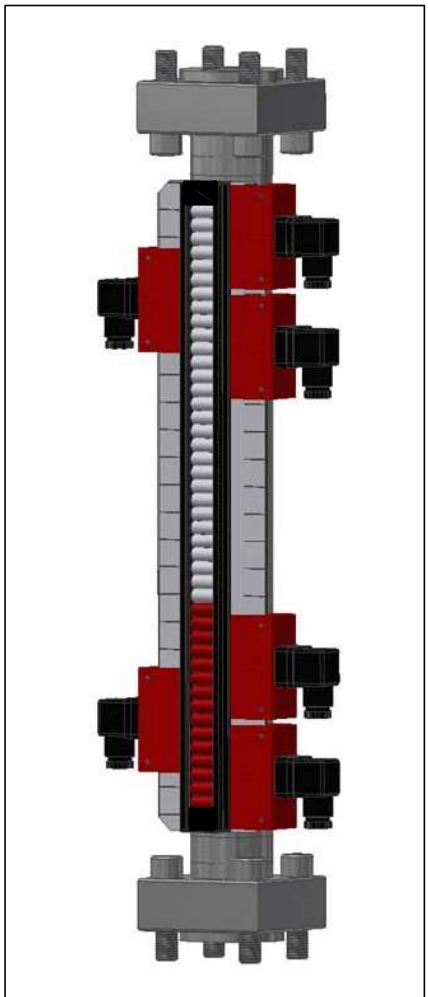

NRA 250 RS/ 320 RS/AVIT - S

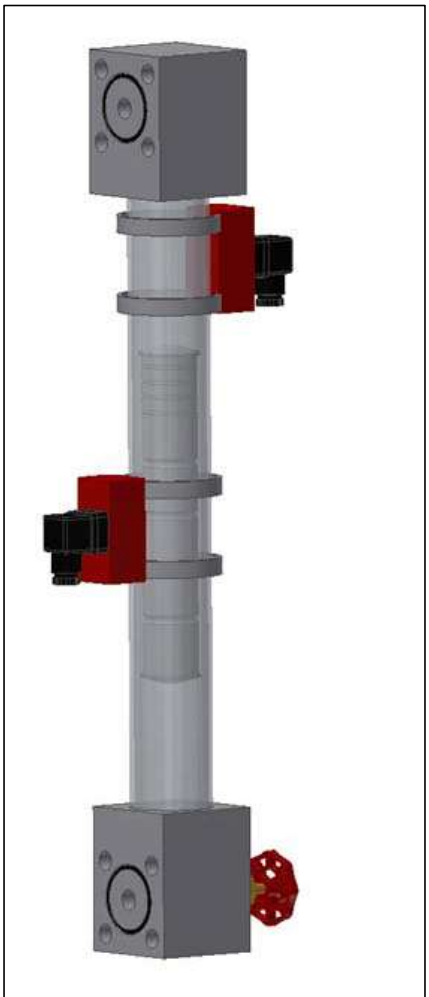

NRA 1/20

Description

The level controller type NRA .../AVIT is designed for surface mounting on containers as communicating vessels.
Optical level height monitoring without external power supply via a magnetic rotary display.

By connecting infinitely adjustable, bistables electromagnetic changeover contacts to the visual indicating scale, various control options can be configured. On request contact type NRA-W-L with LED display can be fitted. For continuous remote transmission, a transmitter can be fitted.

The output signal is 4-20 mA (resistance measuring chain, contact pitch 7,5 /15 mm).

The device must only be installed by specialists.

Max. viscosity ISO VG 320

Technical data

Nominal pressure	160/ 250 / 320 / 400 bar max.
Float tube	Stainless steel, max. L=6000 mm
Container connection	Steel C22, welding FA
Display	Magnetic rotary display
Medium temperature	50°C max.
Medium density	0,8 kg/dm³ min.
Float	Ceramic type MD 320
Level contacts	bistables changeover contacts
NRA-W	250V AC/DC max
NRA-W-L	24-230V max (LED)
Current switch	1A max - 60W
Transmitter	12-30 VDC
Measuring range	4-20 mA =0-100%
Contact pitch	7,5 / 15mm
Linearity	0,5%
Load	RB= U-12V / 20mA

GOLDAMMER
REGELUNGSTECHNIK GMBH
SCHÖLLERSHEIDER STR. 15 PHONE (49) 2104/12093
P.O.BOX 10 02 17 FAX (49) 2104/12028
D-40802 METTMANN www.Goldammer-Regelungstechnik.com

Datenblatt - Kontakt NRAC - W
Datasheet - contact NRAC - W

lfd.Nr.	Datum
AM - D - 205/4	09/19

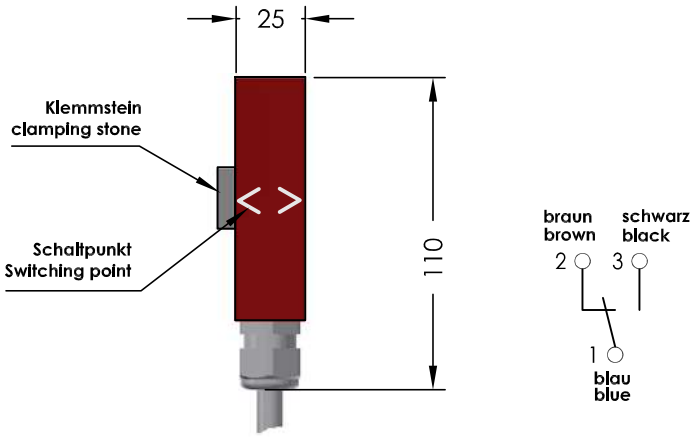

NRAC-W - Pg 9

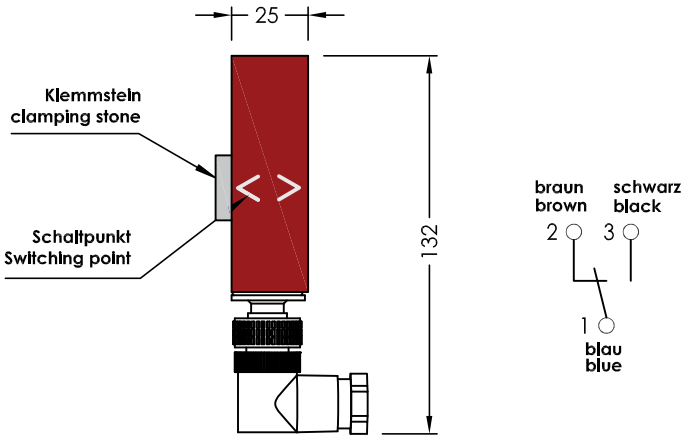

NRAC-W - M12

Technische Daten

Kontaktform			C
Kontaktmaterial			Rh
Schaltvermögen	max.	W/VA	60
Schaltspannung	max.	Vac/dc	400
Schaltstrom	max.	A	1.0
Dauergrenzstrom	max.	A	2.0
Spannungsfestigkeit	min.	Vdc	1000
Durchgangswiderstand	max.	m Ohm	100
Isolationswiderstand	min.	Ohm	1E9
Ansprecherregung		AW/AT	17-50
Rückfallerregung		AW/AT	17-40
Schalt ohne Prellzeit		ms	4.0
Prellzeit		ms	0.5
Rückfallzeit	max.	ms	0.15
Resonanzfrequenz	typ.	Hz	1200
Arbeitsfrequenz	max.	Hz	100
Vibrationsfestigkeit	39g	Hz	2000
Stoßfestigkeit	11ms	g	50
Kapazität	Typ	pF	1.0
Betriebstemperatur		°C	-40...+150

Die Lebensdauer der Niveaukontakte beträgt bei maximaler Belastung 10^5...10^6 Schaltspiele. Die mechanische Lebensdauererwartung beträgt mindestens 10^9 Schaltspiele.

Technical Data

Contact			C
Contact material			Rh
Switching capacity	max.	W/VA	60
Switching voltage	max.	Vac/dc	400
Switching current	max.	A	1.0
Carring current	max.	A	2.0
Dielectic strength	min.	Vdc	1000
Contact resistance	max.	m Ohm	1 00
Insulation resistance	min.	Ohm	1E9
Pull-in sensitivity		AW/AT	17-50
Drop-out sensitivity		AW/AT	17-40
Switching time w/o bounce		ms	4.0
Bounce time		ms	0.5
Release time	max.	ms	0.15
Resonant frequency	typ.	Hz	1200
Oparating frequency	max.	Hz	100
Vibration	39g	Hz	2000
Shock	11ms	g	50
Capacitance	Typ	pF	1.0
Oparating temperatur	°C		-40..150

The life span of the level contacts amounts by maximum charging 10^5...10^6 switching charges. The mechanical life span amounts at least 10^9 switching charges.

GOLDAMMER
REGELUNGSTECHNIK GMBH

SCHÖLLERSHEIDER STR. 15 TELEFON 02104/12093
POSTFACH 10 02 17 TELEFAX 02104/12028
D-40802 METTMANN www.Goldammer-Regelungstechnik.com

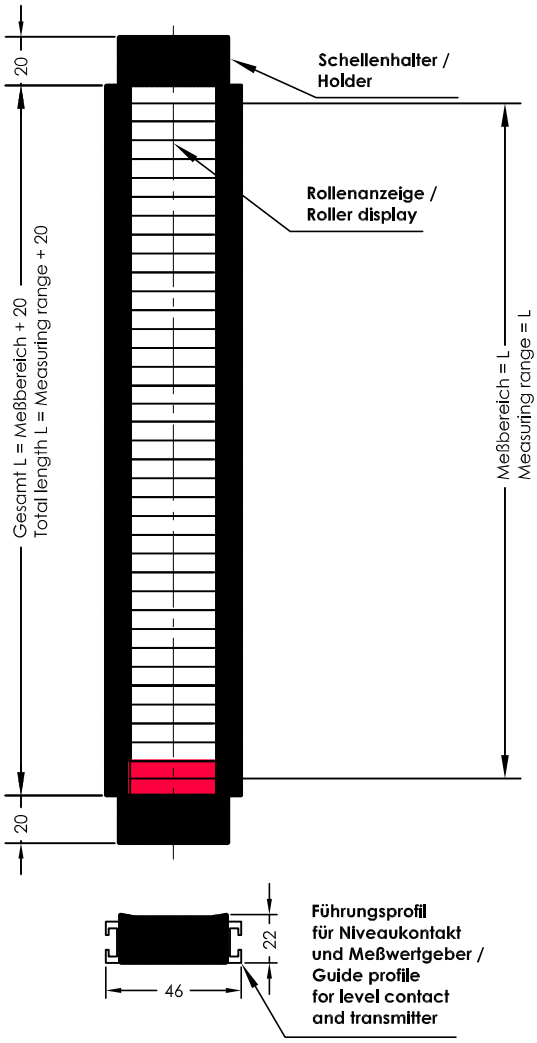

Beschreibung

Magnetrollengehäuse	- Aluminium eloxiert.
Magnetrolle	- Schwarz weiß Makrolon
Magnetrollenabdeckung	- Makrolon
Schellenhalter	- PA
Umgebungstemperatur	- max. 60°C
Befestigung	- mit Edelstahlschellen

Description

Magnetic roller housing	- Anodized aluminum
Magnetic roller	- Black and white makrolon
Magnetic roller cover	- Makrolon
Holder	- PA
Ambient temperature	- max. 60°C
Attachment	- with stainless steel hose fixing clip

GOLDAMMER
REGELUNGSTECHNIK GMBH

SCHÖLLERSHEIDER STR. 15 TELEFON 02104/12093
POSTFACH 10 02 17 TELEFAX 02104/12028
D-40802 METTMANN www.Goldammer-Regelungstechnik.com

NRA 250RS/S NRA320RS/S-AVIT

Level controller for surface mounting

serial No. Date
AM-GB- 206 10/19

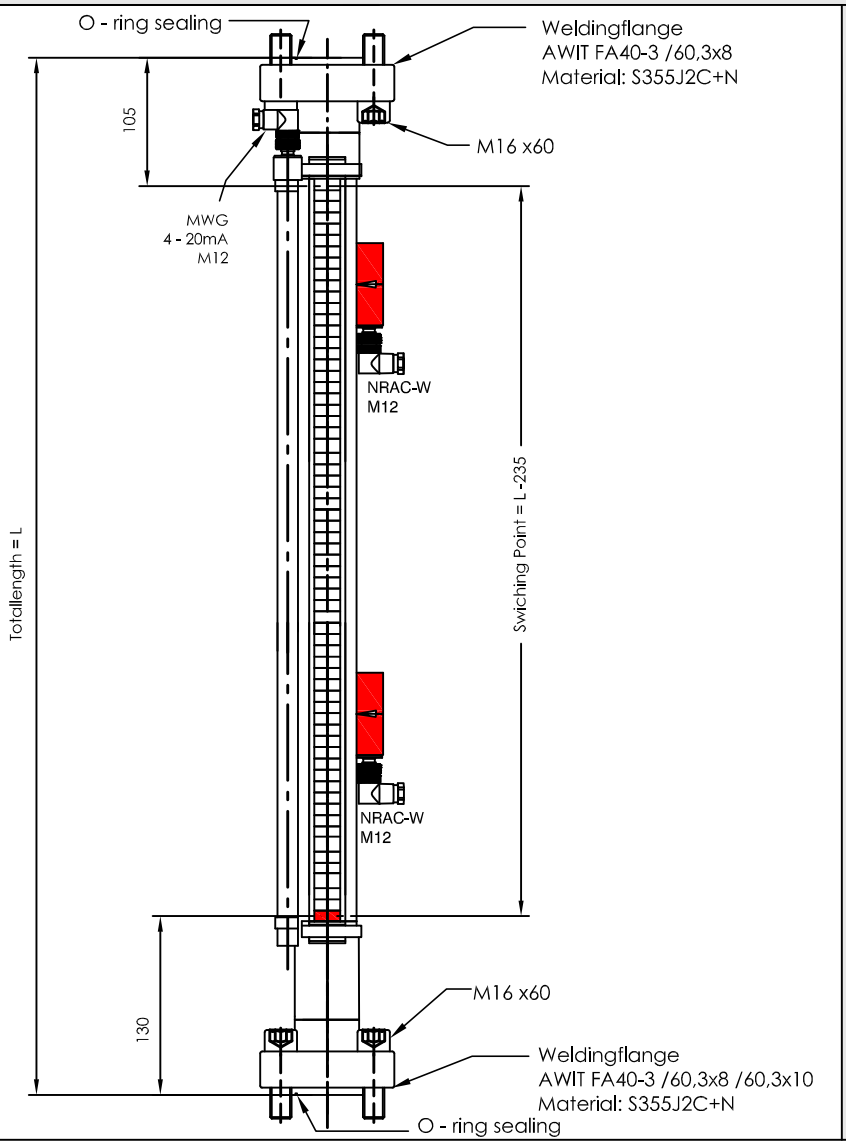

Pin assigment

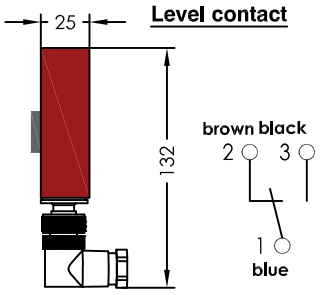

NRAC-W - M12

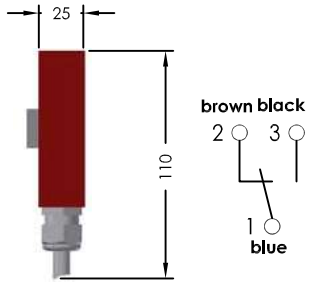

NRAC-W - Pg 9

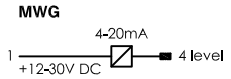

Order code

Specimen order

NRA 250RS / S AVIT x 2000 - 3 / NRAC-W-M12 - MWG - 7.5

- NRA 250RS / S AVIT: NRA 250RS/S, NRA 320RS/S
- 2000: Totallength = L in mm
- 3: Number of level contact
- NRAC-W-M12: Type: NRAC-W-M12, NRAC-W-M12-LED, NRAC-W-Pg 9
- MWG: Transmitter type MWG - 4-20mA
- 7.5: Contact pitch 7.5 / 15 mm

Technical data

Description

The level controller type NRA .../S is designed for surface mounting on containers as communicating vessels.
Optical level height monitoring without external power supply via a magnetic rotary display.

By connecting infinitely adjustable, bistables electromagnetic changeover contacts to the visual indicating scale, various control options can be configured. On request contact type NRA-W-L with LED display can be fitted. For continuous remote transmission, a transmitter can be fitted.

The output signal is 4-20 mA (resistance measuring chain, contact pitch 7,5 /15 mm).
The device must only be installed by specialists.
The level controllers are designed and tested according to the rule AD2000. Quality assurance according to module H, H1.

Max. viscosity 320mm²/S

Technical data

Nominal pressure	250 / 320 bar max.
Float tube	Stainless steel, max. L=6000 mm
Container connection	Steel S355J2C+N, welding FA
Display	Magnetic rotary display
Medium temperature	50°C max.
Medium density	0,8 kg/dm³ min.
Float	Ceramic type MD 250 / MD 320
Level contacts	bistables changeover contacts
NRAC-W	250V AC/DC max.
NRAC-W-L	24V max. (LED)
Current switch	1A max.
Transmitter	12-30 VDC
Measuring range	4-20 mA =0-100%
Contact pitch	7,5 / 15mm
Linearity	0,5%
Load	RB= U-12V / 20mA

GOLDAMMER
REGELUNGSTECHNIK GMBH
SCHÖLLERSHEIDER STR. 15 PHONE (49) 2104/12093
P.O.BOX 10 02 17 FAX (49) 2104/12028
D-40802 METTMANN www.Goldammer-Regelungstechnik.com

Level-temperatur regulator for tank insert

serie MA

- different tank connections available
- output signal 4-20 mA for level and temperature
- level regulator with standard length 250mm, 370mm, 500mm, 800mm, 1000mm, 1100mm, 1200mm, 1300mm, 1400mm and 1500mm
- NR 85 as 150°C version available

NR 1/2 - 3/4 - G1" - M20 - M24 - TMA ...

Level temperature regulator for tank insert
Temperature output 4-20 mA

serial No.	Date
MA-GB- 300/0	12/17

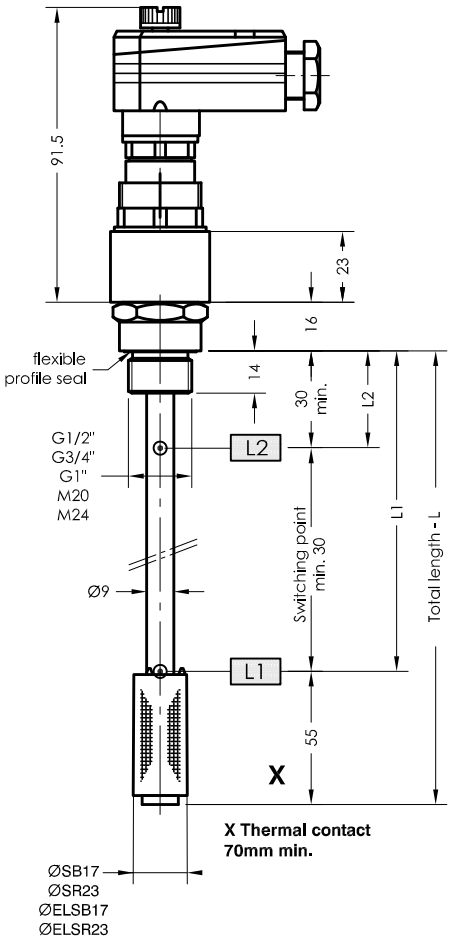

Plug securing power supply

1 = Temperature
2 = +24VDC

3-4 = L1
3-5 = L2 (TF)
3-6 = TF

Temperature

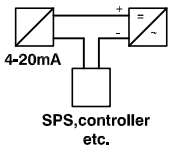

Specimen order

NR 1/2" - TMA-SB17-L245-01-L1/190/S-TF70Ö-M12-24V

Tank connection
1/2"
3/4"
G1"
M20
M24

Float type
SB17
SR23
ELSB17
ELSR23

Total length-L
switching tube (mm)

Level contact type
01 = fixed contact

Switching point L1-L2/ mm from sealing edge
Ö = break
S = make
Function with increasing level

Thermal contact
TF10Ö
TF40Ö
TF50Ö
TF60Ö (S)
TF70Ö (S)
TF80Ö (S)
TF90Ö
(Ö preferred)

Plug socket connector
M12
DIN 43651

Operating voltage
VDC 10-36 = 24V

Order code

Connector variants

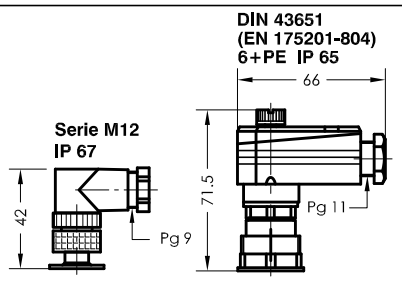

Technical data

Description

The type NR1/2" - TMA... level controller for installation in tanks is a contactless - operating magnetic switch and is used for monitoring and controlling liquid levels and temperatures.
Bistable protective gas contacts are installed in the switch tube.
For fixed contacts, the contact intervals and their function must be given.
The permanent magnet fitted in the float switches the contacts if the level changes. The switching difference (hysterese) is 4 mm.
With the TMA version, the temperature-related signal output from a Pt100 mounted in the switch tube is converted to 4-20 mA by the built-in transducer.

The level regulator is maintenance - free when nondeposit media are used.
For inductive loads, a protective circuit must be provided (free-wheeling diode/RC element).
The device must be installed by specialists only.

Other temperature ranges on request

Max. viscosity 150mm²/S

Technical data

Switch tube	Brass, max.L = 800mm
Connecting thread	Brass G1/2" SW27 Brass G3/4" SW32 Brass G1" SW41 Brass M20 x 1,5 Brass M24 x 1,5
Nominal pressure	1 bar max.
Temperature of medium	80°C max.
Float	Rigid PU, SB17 / SR23 ELSB17 / ELSR23
Level contacts	max. 2 - make/break
Switching current	Datasheet IN - GB - 003
Switching capacity	Datasheet IN - GB - 003
Operating voltage	12V ... 30V DC
Measuring range	4-20 mA = 0-100°C
Thermal element	Pt100, Thermocontact
Load	RB = $\frac{U-12V}{20mA}$
Installed position	Vertical ± 30°

GOLDAMMER
REGELUNGSTECHNIK GMBH
SCHÖLLERSHEIDER STR. 15 PHONE (49) 2104/12093
P.O.BOX 10 02 17 FAX (49) 2104/12028
D-40802 METTMANN www.Goldammer-Regelungstechnik.com

NR 50 - TMA

Level temperature regulator for tank insert
Temperature output 4-20 mA

serial No. Date
IN-GB- 300/1 11/17

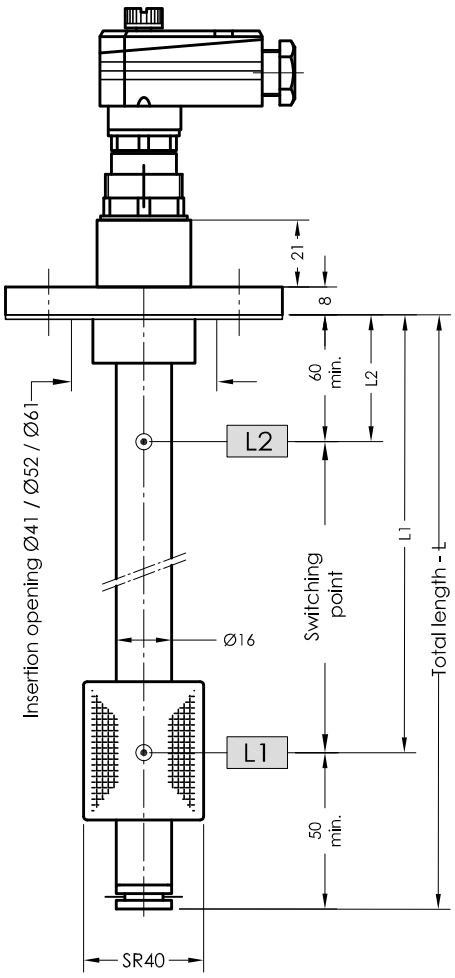

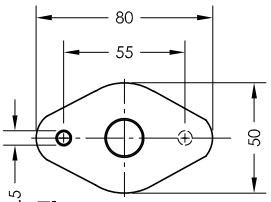

Flange 50
Insertion opening Ø41

Pin assignment

Plug securing
power supply

1 = Temperature
2 = +24VDC

3-4 = L1
3-5 = L2 } Level

Temperature

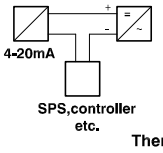

Level contact
-03-

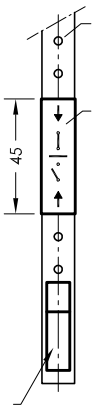

Strip with perforations 10mm

Bistable plain-contact cartridges.

The minimum distance between two contact cartridges is 50mm.

The make or break function is freely adjustable by 180°-rotation of the contact cartridge.

Level contact
-OK-

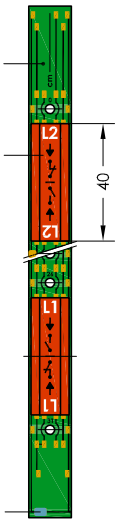

Contact strip grid 10mm

Cableless bistable single contact cartridge OK-L2

The minimum distance between two contact cartridges is 50mm.

The make or break function is freely adjustable by 180°-rotation of the contact cartridge. OK-L1

Order code

Specimen order
NR 50 -TMA-SR40-L370-OK-L1/300/S-MS-M12

Connection
50

Float type
SR 40

Total length-L
switching tube (mm)
Standard lenght
L=250
L=370
L=500

Level contact type
max. OK = Cableless contacts L = 500
01 = fixed contact
03 = adjustable, plain

Switching point L1-L2/
mm from sealing edge
Ö = break
S = make
Function with increasing level

Execution
MS = Brass
VA = Flange, Switching tube and float stainless steel

Plug socket connector
DIN 43651
M12

Connector variants

6+PE
EN 175201-804
(DIN 43651)
IP 65

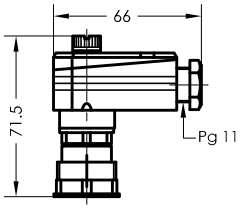

Serie M12
IP 67

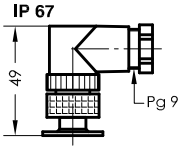

Technical data

Description

The type NR 50 TMA level controller for installation in tanks is a contactless - operating magnetic switch and is used for monitoring and controlling liquid levels and temperatures.
Bistable protective gas contacts are installed in the switch tube as cableless contact cartridges adjustable on a contact strip. The contact cartridges can be retrospectively adjusted in height in increments of 10 mm. The break or make function can be changed by rotating the cartridge 180° .
The permanent magnet fitted in the float switches the contacts if the level changes. The switching difference (hysterese) is 4 mm.
With the TMA version, the temperature-related signal output from a Pt100 mounted in the switch tube is converted to 4-20 mA by the built-in transducer.

The level controller is maintenance free in the absence of media that cause encrustation.
A protective circuit is to be provided for inductive consumers (free-wheeling diode/RC element).
The device must only be installed by specialists.

Max. viscosity 150mm²/S

Technical data

Switch tube	Brass, max.L = 1000mm
Connection	Polyamid or stainless steel with flat seal
Nominal pressure	1 bar max.
Temperature of medium	100°C max.
Float	Rigid PU, SR 40
Level contacts	OK - bistable make/break contact - max. 2 adjustable 01-03 - bistable make/break contac
Switching current	Datasheet IN - GB - 003
Switching capacity	Datasheet IN - GB - 003
Operating voltage	12V ... 30V DC
Measuring range	4-20 mA = 0-100°C
Thermal element	Pt100
Load	RB = U-12V / 20mA
Installed position	Vertical ± 30°

Other temperature ranges on request

GOLDAMMER
REGELUNGSTECHNIK GMBH
SCHÖLLERSHEIDER STR. 15
P.O.BOX 10 02 17
D-40802 METTMANN
PHONE (49) 2104/12093
FAX (49) 2104/12028
www.Goldammer-Regelungstechnik.com

NR 70 - TMA

Level temperature regulator for tank insert
Temperature output 4-20 mA

serial No.	Date
MA-GB- 300	11/17

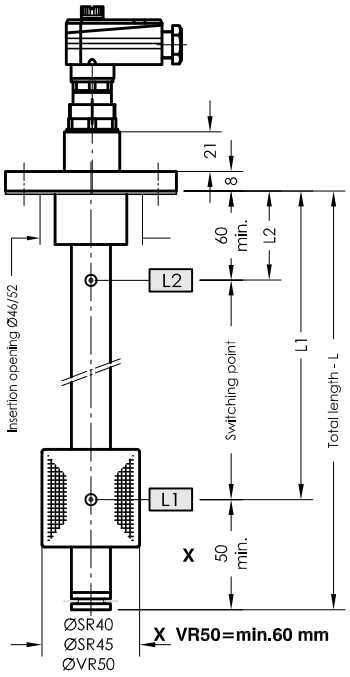

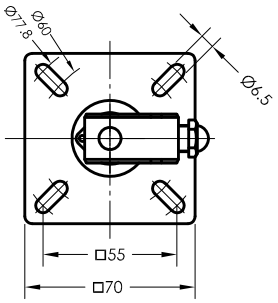

Pin assignment

Plug securing
power supply

1 = Temperature
2 = +24V DC
3 = combined L1-L3
4 = L1
5 = L2
6 = L3

Temperature

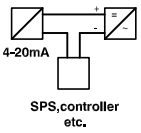

Thermal element

Level contact -04-

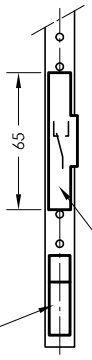

Level contact -OK-

Contact strip grid 10mm

Cableless bistable single contact cartridge OK-L2

The minimum distance between two contact cartridges is 50mm.

The make or break function is freely adjustable by 180°-rotation of the contact cartridge.

Bistable changeover-contact cartridges. The minimum distance between two fixed contact cartridges is 70mm.

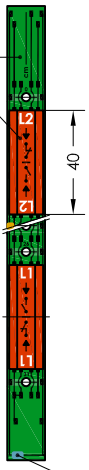

Level contact -03-

Strip with perforations 10mm

Bistable plain-contact cartridges. The minimum distance between two contact cartridges is 50mm. The make or break function is freely adjustable by180°-rotation of the contact cartridge.

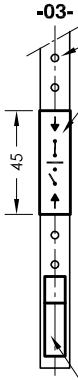

Thermal element

Order code

Specimen order

NR 70 -TMA-SR45-L300-03-L1/200/S-MS-M12

Float type
SR40
SR45
VR50

Total length-L
switching tube (mm)
Standard length
L=250 L=500
L=370 L=800

Level contact type
OK = cordless contact max. L = 500
01 = fixed, plain
02 = fixed, changeover
03 = adjustable, plain
04 = adjustable, changeover

Switching point L1-L3/
mm from sealing edge
Ö = break
S = make
W= changeover
Function with increasing level

Plug socket connector
DIN 43651
6 pol. + PE
M12

Execution
MS = Brass
VA = Flange, Switching tube, and float stainless steel

Connector variants

DIN 43651
(EN 175201-804)
6+PE IP 65

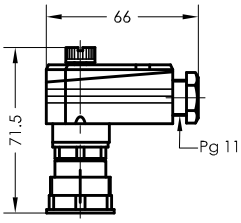

6 pol. + PE
IP 67

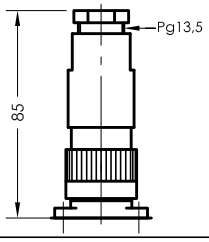

Serie M12
IP 67

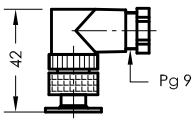

Technical data

Description

The level temperature regulator type NR 70 - TMA for tank insert is a solenoid switch operating without contact with the function of monitoring and regulating liquid levels and temperatures.
The switching tube contains bistable protective gas contacts. They may be fixed or alternatively mounted as an adjustable contact cartridge on a perforated strip. For fixed contacts, the contact intervals and their functions must be given. Plain contact cartridges can be subsequently adjusted for height. The function of make or break can then be altered by turning the cartridge through 180° degrees.
The permanent magnet built into the float switches the contacts when the level changes. The switching difference (hysteresis) is 4 mm. For temperature monitoring, the temperature dependent signal emitted from a Pt100 resistor mounted in the contact tube is converted with the installed transducer into a temperature linear current change of 4-20mA.

The level controller is maintenance-free when nondeposit media are used. For inductive loads, a protective circuit must be provided (free-wheeling diode/RC element).

The device must only be installed by specialists.

Max. viscosity SR 45 - 320mm²/S
VR 50 - 320mm²/S

Technical data

Switching tube	Brass or stainless steel max. L = 2000mm
Connection flange	Polyamid or stainless steel with flat seal
Nominal pressure	1 bar max. - float Hard-PU SR40/SR45 10 bar max. - float stainless steel VR50
Temperature of medium	100°C max.
Switching potential	Datasheet IN - GB - 003(004)
Operating voltage	12V ... 30V DC
Measuring range	4-20 mA = 0-100%
Thermal element	Pt100
Number of functions	max. 3 can be incorporated
Load	RB = U-12V / 20mA
Mounting position	vertical ± 30°

Other temperature ranges on request

GOLDAMMER
REGELUNGSTECHNIK GMBH

SCHÖLLERSHEIDER STR. 15
P.O.BOX 10 02 17
D-40802 METTMANN

PHONE (49) 2104/12093
FAX (49) 2104/12028
www.Goldammer-Regelungstechnik.com

NR 1" - TMA 11/4"

Level temperature regulator for tank insert
Temperature output 4-20 mA

serial No.	Date
MA-GB- 300/a	11/17

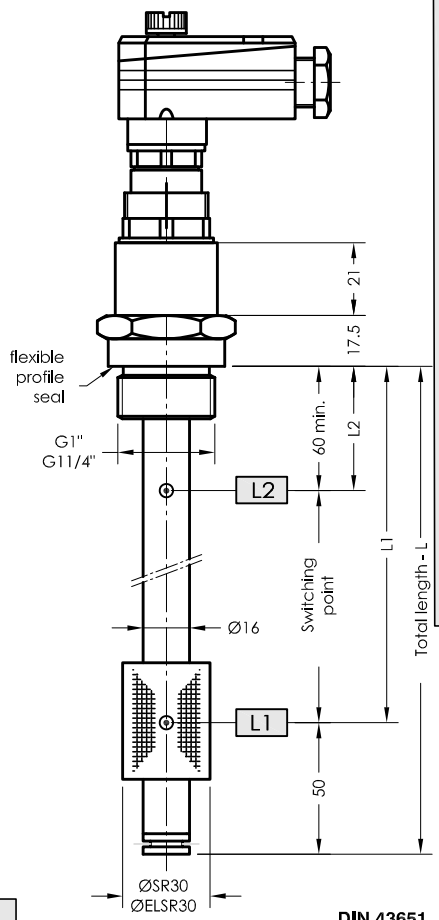

Pin assignment

Plug securing
power supply

1 = Temperature
2 = +24VDC

3-4 = L1
3-5 = L2 } Level

Temperature

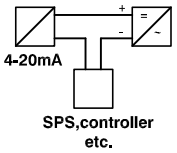

Level contact
-03-

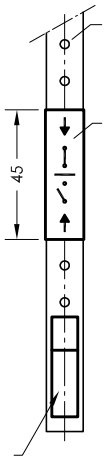

Strip with perforations 10mm

Bistable plain-contact cartridges.

The minimum distance between two contact cartridges is 50mm.

The make or break function is freely adjustable by 180°-rotation of the contact cartridge.

Level contact
-OK-

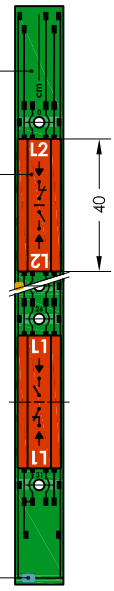

Contact strip grid 10mm

Cableless bistable single contact cartridge OK-L2

The minimum distance between two contact cartridges is 50mm.

The make or break function is freely adjustable by 180°-rotation of the contact cartridge. OK-L1

Connector variants

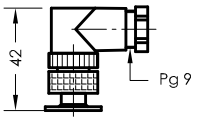

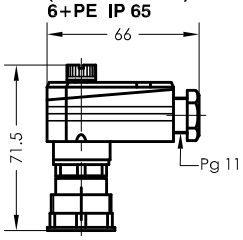

Order code

Specimen order

NR 1" -TMA-SR30-L250-01-L1/200/S-MS-M12

Tank connection
1"
11/4"

Float type
SR30
ELSR30

Total length-L
switching tube (mm)
standard length
L=250 L=500
L=370

Level contact type
OK = Cableless contacts - max.L=500
01 = fixed contact
03 = adjustable, plain

Switching point L1-L2/
mm from sealing edge
Ö = break
S = make
Function with
increasing level

Plug socket connector
M12, DIN 43651

Execution
MS = Brass
VA = Connectiontread, Switching tube stainless steel

Technical data

Description

The type NR 1", G11/4" level controller for installation in tanks is a contactless - operating magnetic switch and is used for monitoring and controlling liquid levels and temperatures.
Bistable protective gas contacts are installed in the switch tube as cableless contact cartridges adjustable on a contact strip. The contact cartridges can be retrospectively adjusted in height in increments of 10 mm. The break or make function can be changed by rotating the cartridge 180° .
The permanent magnet fitted in the float switches the contacts if the level changes. The switching difference (hysterese) is 4 mm.
With the TMA version, the temperature-related signal output from a Pt100 mounted in the switch tube is converted to 4-20 mA by the built-in transducer.

The level controller is maintenance free in the absence of media that cause encrustation.
A protective circuit is to be provided for inductive consumers (free-wheeling diode/RC element).
The device must only be installed by specialists.

Max. viscosity 150mm²/S

Technical data

Switch tube	Brass / Stainless steel, max.L = 1000mm
Connecting thread	Brass / Stainless steel, G1"SW41,G11/4S
Nominal pressure	1 bar max.
Temperature of medium	100°C max.
Float	Rigid PU, SR 30, ELSR30
Level contacts	OK - bistable make/break contact
	- max. 2 adjustable
	01-03 - bistable make/break contact
Switching current	Datasheet IN - D - 003
Switching capacity	Datasheet IN - D - 003
Operating voltage	12V ... 30V DC
Measuring range	4-20 mA = 0-100°C
Thermal element	Pt100
Load	RB = U-12V / 20mA
Installed position	Vertical ± 30°

Other temperature ranges on request

GOLDAMMER
REGELUNGSTECHNIK GMBH

SCHÖLLERSHEIDER STR. 15 PHONE (49) 2104/12093
P.O.BOX 10 02 17 FAX (49) 2104/12028
D-40802 METTMANN www.Goldammer-Regelungstechnik.com

NR 85 - TMA

Level temperature regulator for tank insert
Temperature output 4-20 mA

serial No.	Date
MA-GB- 301	04/19

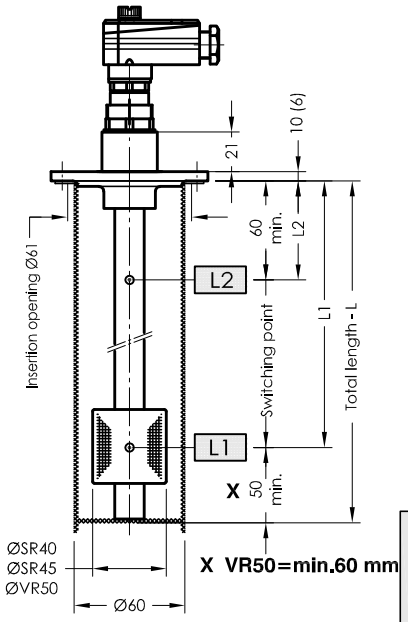

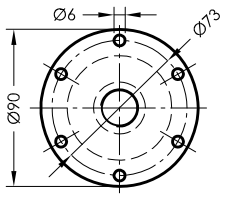

according to DIN24557 part 2

Pin assignment

Plug securing
power supply

1 = Temperature
2 = +24V DC
3 = combined
L1-L3
4 = L1
5 = L2
6 = L3

Temperature

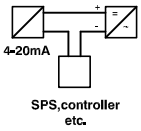

Level contact -04-

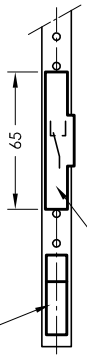

Level contact -OK-

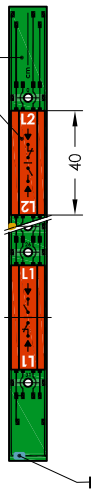

Contact strip grid 10mm

Cableless bistable single contact cartridge OK-L2

The minimum distance between two contact cartridges is 50mm.

The make or break function is freely adjustable by 180°-rotation of the contact cartridge. OK-L1

Bistable changeover-contact cartridges. The minimum distance between two fixed contact cartridges is 70mm.

Level contact -03-

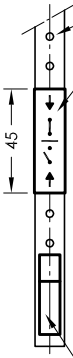

Strip with perforations 10mm

Bistable plain-contact cartridges. The minimum distance between two contact cartridges is 50mm. The make or break function is freely adjustable by180°-rotation of the contact cartridge.

Thermal element

Order code

Specimen order

NR 85 -TMA - SR45 - L300 - 03 - L1/200/S - MS - M12

TMA = without protective tube
TMAS = with protective tube

Float type
SR40
SR45
VR50

Total length-L
switching tube (mm)
standard length
L= 280 L= 800
L= 370 L= 1000
L= 500 L= 1200

OK = cordless contact max. L = 500
01 = fixed, plain
02 = fixed, changeover
03 = adjustable, plain
04 = adjustable, changeover

Switching point L1-L3/mm
from sealing edge
Ö = break
S = make
W= changeover
Function with
increasing level

Execution
MS = Brass
VA = Flange, Switching tube, Protective tube and float stainless steel
VAPA = Flange PA, Switching tube stainl. steel

Plug socket connector
DIN 43651
M12

Connector variants

DIN 43651
(EN 175201-804)
6+PE
IP 65

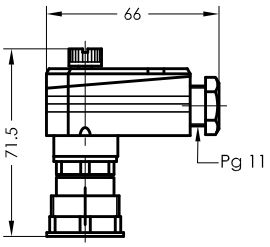

Serie M12
IP 67

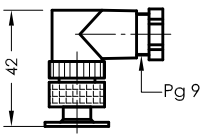

Technical data

Description

The level temperature regulator type NR 85 - TMA for tank insert is a solenoid switch operating without contact with the function of monitoring and regulating liquid levels and temperatures.
The switching tube contains bistable protective gas contacts. They may be fixed or alternatively mounted as an adjustable contact cartridge on a perforated strip. For fixed contacts, the contact intervals and their functions must be given. Plain contact cartridges can be subsequently adjusted for height. The function of make or break can then be altered by turning the cartridge through 180° degrees.
The permanent magnet built into the float switches the contacts when the level changes. The switching difference (hysteresis) is 4 mm. For temperature monitoring, the temperature dependent signal emitted from a Pt100 resistor mounted in the contact tube is converted with the installed transducer into a temperature linear current change of 4-20mA.

The level controller is maintenance-free when nondeposit media are used.
For inductive loads, a protective circuit must be provided (free-wheeling diode/RC element).
The device must only be installed by specialists.

Max. viscosity SR40 / SR 45 - 320mm²/S
VR 50 - 320mm²/S

Technical data

Protective tube	Stainless steel
Switching tube	Brass or stainless steel max.L = 2000mm
Connection flange	Polyamid or stainless steel with flat seal
Nominal pressure	1 bar max. - float Hard-PU SR 40 / SR45 10 bar max. - float Stainless steel VR5
Temperature of medium	100°C max.
Switching potential	Datasheet IN - GB - 003(004)
Operating voltage	12V ... 30V DC
Measuring range	4-20 mA = 0-100°C
Thermal element	Pt100
Number of functions	max. 4 can be incorporated
Load	RB = U-12V / 20mA
Mounting position	vertical ± 30°

Other temperature ranges on request

GOLDAMMER
REGELUNGSTECHNIK GMBH
SCHÖLLERSHEIDER STR. 15 PHONE (49) 2104/12093
P.O.BOX 10 02 17 FAX (49) 2104/12028
D-40802 METTMANN www.Goldammer-Regelungstechnik.com

NR 85 - TMA - 150°C

Level temperature regulator for tank insert
Temperature output 4-20 mA

serial No. Date
MA-GB- 302 04/18

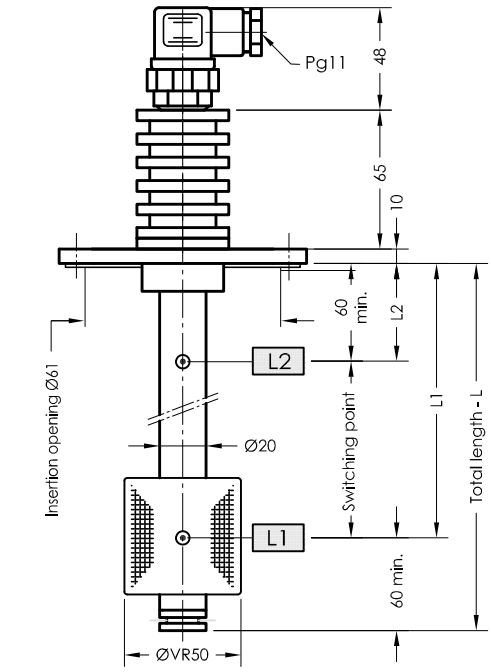

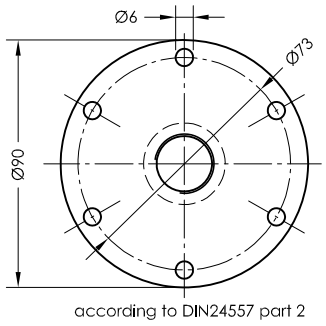

Pin assignment

Temperature

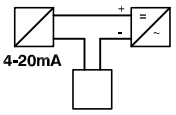

Plug securing
power supply

1 = Temperature
2 = +24VDC

3-4 = L1
3-5 = L2 } Level
3-6 = L3

Specimen order
NR 85-TMA-150°C-VR50-L300-02-L1/200/S-VA-DIN43651

Order code

- Float type VR50
- Total length-L switching tube (mm)
- Level contact type 02 = fixed, changeover
- Switching point L1-L3/mm from sealing edge W= changeover Function with increasing level
- Execution VA = Flange, Switching tube and float stainless steel
- Plug socket connector DIN 43651 3+PE M12

Connector variants

3+PE
EN 175301-803
(DIN 43650)
IP 65

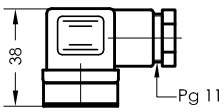

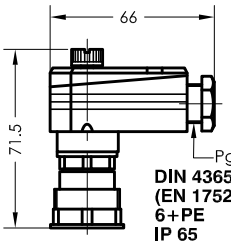

DIN 43651
(EN 175201-804)
6+PE
IP 65

Serie M12
IP 67

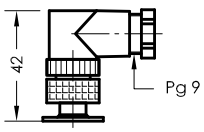

Technical data

Description

The level temperature regulator type NR 85 - TMA - 150°C for tank insert is a solenoid switch operating without contact with the function of monitoring and regulating liquid levels and temperatures.

The switching tube contains bistable protective gas contacts. They may be fixed or alternatively mounted as an adjustable contact cartridge on a perforated strip. For fixed contacts, the contact intervals and their functions must be given. Plain contact cartridges can be subsequently adjusted for height. The function of make or break can then be altered by turning the cartridge through 180° degrees.
The permanent magnet built into the float switches the contacts when the level changes. The switching difference (hysteresis) is 4 mm. For temperature monitoring, the temperature dependent signal emitted from a Pt100 resistor mounted in the contact tube is converted with the installed transducer into a temperature linear current change of 4-20mA. The level controller is maintenance-free when nondeposit media are used.
Any cable length can be used and must be shielded.
For inductive loads, a protective circuit must be provided (free-wheeling diode/RC element).

The device must only be installed by specialists.

Technical data

Switching tube	Stainless steel max. L 2000mm
Connection flange	Stainless steel with flat seal Viton
Nominal pressure	10 bar max., float stainless steel VR50
Temperature of medium	150°C max.
Switching current	Datasheet IN - GB - 004
Switching potential	Datasheet IN - GB - 004
Operating voltage	12V ... 30V DC
Measuring range	4-20 mA = 0 - 160°
Thermal element	Pt100
Number of functions	max. 3 can be incorporated
Load	RB = U-12V / 20mA
Mounting position	vertical ± 30°

Max. Viscosity 320mm²/S

GOLDAMMER
REGELUNGSTECHNIK GMBH
SCHÖLLERSHEIDER STR. 15 PHONE (49) 2104/12093
P.O.BOX 10 02 17 FAX (49) 2104/12028
D-40802 METTMANN www.Goldammer-Regelungstechnik.com

NR 95 - TMA

Level temperature regulator for tank insert
Temperature output 4-20 mA

serial No.	Date
MA-GB- 303a	04/18

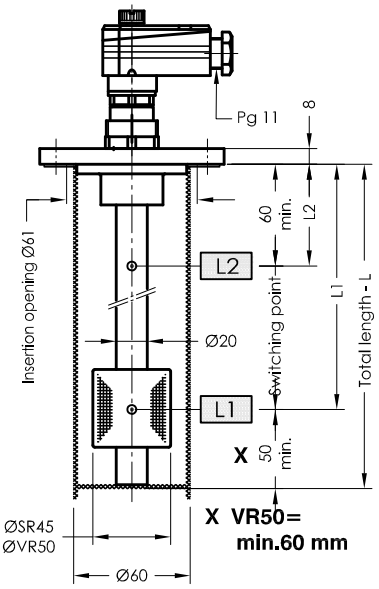

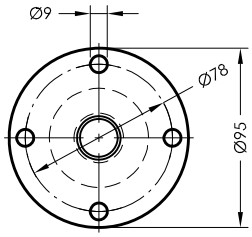

Pin assignment

Plug securing
power supply

1 = Temperature
2 = +24V DC
3 = combined L1-L3
4 = L1
5 = L2
6 = L3

Temperature

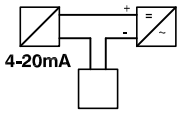

SPS,controller etc.

Level contact -04-

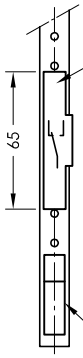

Bistable changeover-contact cartridges.

The minimum distance between two fixed contact cartridges is **70mm.**

Thermal element

Level contact -03-

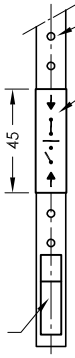

Strip with perforations 10mm

Bistable plain-contact cartridges. The minimum distance between two contact cartridges is **50mm.**

The make or break function is freely adjustable by 180°-rotation of the contact cartridge.

Order code

Specimen order

NR 95 -TMA - SR45 - L300 - 03 - L1/200/S - MS - M12

TMA = without protective tube
TMAS = with protective tube

Float type
SR45
VR50

Total length-L switching tube (mm)

Switching point L1-L3/ mm from sealing edge
Ö = break
S = make
W= changeover
Function with increasing level

Level contact type
01 = fixed, plain
02 = fixed, changeover
03 = adjustable, plain
04 = adjustable, changeover

Execution
MS = Brass
VA = Flange, Protective tube, Switching tube and float stainless steel

Plug socket connector
DIN 43651
M12

Connector variants

DIN 43651
(EN 175201-804)
6+PE
IP 65

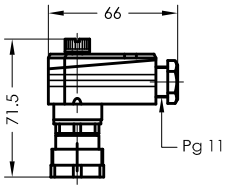

Serie M12
IP 67

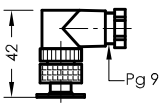

Technical data

Description

The level temperature regulator type NR 95 - TMA for tank insert is a solenoid switch operating without contact with the function of monitoring and regulating liquid levels and temperatures.
The switching tube contains bistable protective gas contacts. They may be fixed or alternatively mounted as an adjustable contact cartridge on a perforated strip. For fixed contacts, the contact intervals and their functions must be given. Plain contact cartridges can be subsequently adjusted for height. The function of make or break can then be altered by turning the cartridge through 180° degrees.
The permanent magnet built into the float switches the contacts when the level changes. The switching difference (hysteresis) is 4 mm. For temperature monitoring, the temperature dependent signal emitted from a Pt100 resistor mounted in the contact tube is converted with the installed transducer into a temperature linear current change of 4-20mA.

The level controller is maintenance-free when nondeposit media are used.
For inductive loads, a protective circuit must be provided (free-wheeling diode/RC element).
The device must only be installed by specialists.

Other measuring ranges on request.

Max. viscosity SR 45 - 320mm²/S
VR 50 - 320mm²/S

Technical data

Protective tube	Stainless steel
Switching tube	Brass or stainless steel max.L = 2000mm,
Connection flange	galvanic steel or stainless steel with flat seal
Nominal pressure	1 bar max. - float Hard-PU SR45 10 bar max. - float stainless steel VR50
Temperature of medium	100°C max.
Switching potential	Datasheet IN - GB - 003(004)
Operating voltage	12V ... 30V DC
Measuring range	4-20 mA = 0-100°C
Thermal element	Pt100
Number of functions	max. 4 can be incorporated
Load	RB = U-12V / 20mA
Mounting position	vertical ± 30°

Other temperature ranges on request

GOLDAMMER
REGELUNGSTECHNIK GMBH

SCHÖLLERSHEIDER STR. 15 PHONE (49) 2104/12093
P.O.BOX 10 02 17 FAX (49) 2104/12028
D-40802 METTMANN www.Goldammer-Regelungstechnik.com

NR 1/120 - TMA

Level temperature regulator for tank insert
Temperature output 4-20 mA

serial No.	Date
MA-GB- 304	04/18

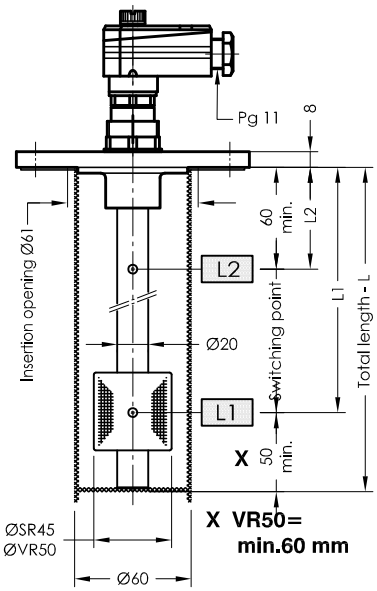

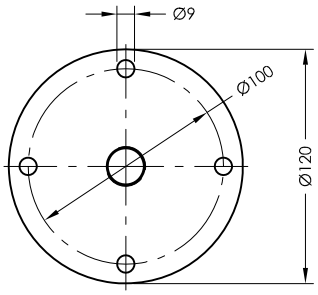

Pin assignment

Plug securing
power supply
1 = Temperature
2 = +24V DC
3 = combined L1-L3
4 = L1
5 = L2
6 = L3

Temperature

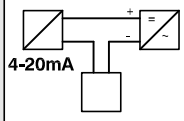

SPS,controller
etc.

Level contact -04-

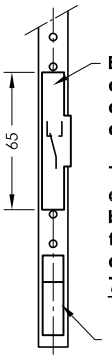

Bistable changeover-contact cartridges.

The minimum distance between two fixed contact cartridges is 70mm.

Thermal element

Level contact -03-

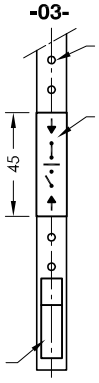

Strip with perforations 10mm

Bistable plain-contact cartridges. The minimum distance between two contact cartridges is 50mm. The make or break function is freely adjustable by 180°-rotation of the contact cartridge.

Order code

Specimen order

NR 1/120 - TMA - SR45 - L300 - 03 - L1/200/S - MS - M12

TMA = without protective tube
TMAS = with protective tube

Float type
SR45
VR50

Total length-L
switching tube (mm)

Level contact type
03 = adjustable, plain
04 = adjustable, changeover

Switching point L1-L3/ mm from sealing edge
Ö = break
S = make
W= changeover
Function with increasing level

Execution
MS = Brass
VA = Flange, Switching tube, Protective tube and float stainless steel

Plug socket connector
DIN 43651
M12

Connector variants

DIN 43651
(EN 175201-804)
6+PE
IP 65

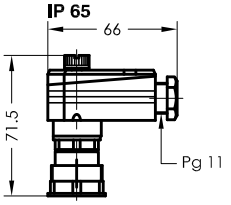

Serie M12
IP 67

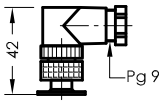

Technical data

Description

The level temperature regulator type NR 1/120 - TMA for tank insert is a solenoid switch operating without contact with the function of monitoring and regulating liquid levels and temperatures.
The switching tube contains bistable protective gas contacts.
They may be fixed or alternatively mounted as an adjustable contact cartridge on a perforated strip. For fixed contacts, the contact intervals and their functions must be given. Plain contact cartridges can be subsequently adjusted for height. The function of make or break can then be altered by turning the cartridge through 180° degrees.
The permanent magnet built into the float switches the contacts when the level changes. The switching difference (hysteresis) is 4 mm.
For temperature monitoring, the temperature dependent signal emitted from a Pt100 resistor mounted in the contact tube is converted with the installed transducer into a temperature linear current change of 4-20mA.

The level controller is maintenance-free when nondeposit media are used.
For inductive loads, a protective circuit must be provided (free-wheeling diode/RC element).
The device must only be installed by specialists.

Max. viscosity SR 45 - 320mm²/S
VR 50 - 320mm²/S

Technical data

Protective tube	Stainless steel
Switching tube	Brass or stainless steel L = 3000mm
Connection flange	Aluminium or stainless steel with flat seal
Nominal pressure	1 bar max. - float Hard-PU SR45 10 bar max. - float stainless steel VR50
Temperature of medium	100°C max.
Switching potential	Datasheet IN - GB - 003(004)
Operating voltage	12V ... 30V DC
Measuring range	4-20 mA = 0-100°C
Thermal element	Pt100
Number of functions	max. 4 can be incorporated
Load	RB = U-12V / 20mA
Mounting position	vertical ± 30°

Other temperature ranges on request

GOLDAMMER
REGELUNGSTECHNIK GMBH
SCHÖLLERSHEIDER STR. 15 PHONE (49) 2104/12093
P.O.BOX 10 02 17 FAX (49) 2104/12028
D-40802 METTMANN www.Goldammer-Regelungstechnik.com

NR 6/32 - TMA

Level temperature regulator for tank insert
Temperature output 4-20 mA

serial No.	Date
MA-GB- 305	04/18

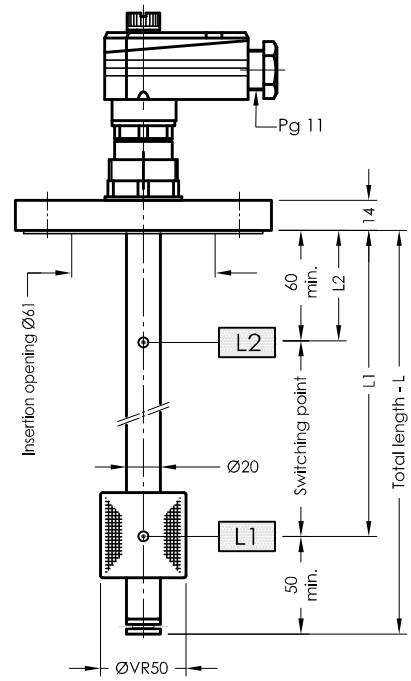

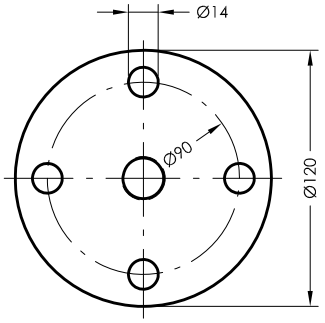

Pin assignment

Plug securing
power supply

1 = Temperature
2 = +24V DC
3 = combined L1-L3
4 = L1
5 = L2
6 = L3

Temperature

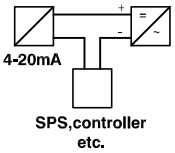

Level contact -04-

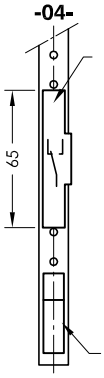

Bistable changeover-contact cartridges.

The minimum distance between two fixed contact cartridges is 70mm.

Thermal element

Level contact -03-

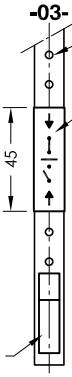

Strip with perforations 10mm

Bistable plain-contact cartridges. The minimum distance between two contact cartridges is 50mm. The make or break function is freely adjustable by 180°- rotation of the contact cartridge.

Order code

Specimen order

NR 6/32 -TMA - VR50 - L300 - 03 - L1/200/S - MS - M12

Float type
VR50

Total length-L
switching tube (mm)

Level contact type
03 = adjustable, plain
04 = adjustable, changeover

Switching point L1-L3/
mm from sealing edge
Ö = break
S = make
W= changeover
Function with
increasing level

Execution
MS = Brass
VA = Flange, Switching tube, Protective tube and float stainless steel

Plug socket connector
DIN 43651
M12

Connector variants

DIN 43651 (EN 175201-804)
6+PE
IP 65

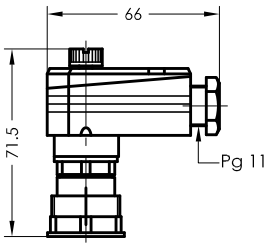

Serie M12
IP 67

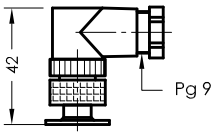

Technical data

Description

The level temperature regulator type NR 6/32 - TMA for tank insert is a solenoid switch operating without contact with the function of monitoring and regulating liquid levels and temperatures.
The switching tube contains bistable protective gas contacts. They may be fixed or alternatively mounted as an adjustable contact cartridge on a perforated strip. For fixed contacts, the contact intervals and their functions must be given. Plain contact cartridges can be subsequently adjusted for height. The function of make or break can then be altered by turning the cartridge through 180° degrees.
The permanent magnet built into the float switches the contacts when the level changes. The switching difference (hysteresis) is 4 mm. For temperature monitoring, the temperature dependent signal emitted from a Pt100 resistor mounted in the contact tube is converted with the installed transducer into a temperature linear current change of 4-20mA.
The level controller is maintenance-free when nondeposit media are used.
For inductive loads, a protective circuit must be provided (free-wheeling diode/RC element).
The device must only be installed by specialists.

Max. viscosity 320mm²/S

Technical data

Switching tube	brass or stainless steel max.L = 6000mm
Connection flange	aluminium or stainless steel with flat seal
Nominal pressure	10 bar max.,
Temperature of medium	100°C max.
Float	stainless steel VR50
Switching potential	Datasheet IN - GB - 003(004)
Operating voltage	12V ... 30V DC
Measuring range	4-20 mA = 0-100°C
Thermal element	Pt100
Number of functions	max. 4 can be incorporated
Load	RB = U-12V / 20mA
Mounting position	vertical ± 30°

Other temperature ranges on request

GOLDAMMER
REGELUNGSTECHNIK GMBH
SCHÖLLERSHEIDER STR. 15 PHONE (49) 2104/12093
P.O.BOX 10 02 17 FAX (49) 2104/12028
D-40802 METTMANN www.Goldammer-Regelungstechnik.com

NR 50 - MA

Level - temperature controller with resistance measuring chain and resistance thermometer, output 4-20 mA

serial No.	Date
MA-GB- 305a	04/19

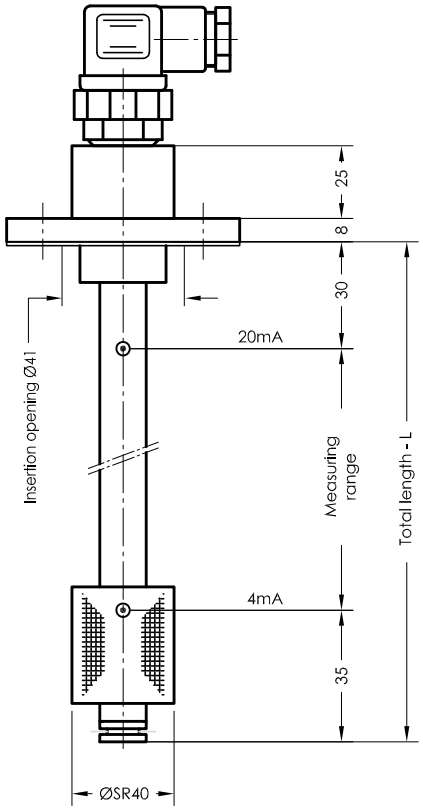

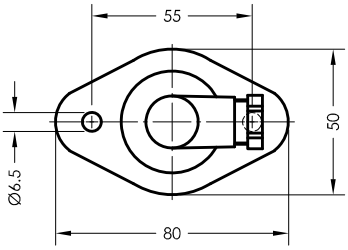

Pin assignment

Plug securing
power supply

3-polig + PE
EN 175301-803 (DIN 43650)
level 1 = +12-30V DC
2 = level

M12 - 5 polig
level 1 = +12-30V DC
4 = level

3-polig + PE
EN 175301-803 (DIN 43650)
level + temperature 1 = +12-30V DC
2 = level
3 = temperature

M12 - 5-polig
and
6+PE - EN 175201-804 (DIN 43651)
level + temperature 1 = +12-30V DC
4 = level
2 = temperature

seperate level + temperature 1 = +12-30V DC
4 = level
2 = +12-30V DC
3 = temperature

Order code

Specimen order

NR 50 - MA - SR40 - L370 - T - 0 - MS - M12

Float type
SR40

Total length-L switching tube (mm)
Standard length (special length)
L=250 L=700
L=370 L=800
L=500 L=900
L=600 L=1000

T = temperature
0 = without temperature

0 = combined
1 = separate

Execution
MS = Brass
VA = Switching tube, stainless steel

Plug socket connector
3+PE
DIN 43651
M12

Connector variants

3+PE
EN 175301-803
(DIN 43650)
IP 65

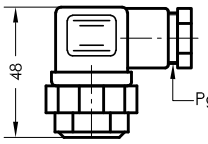

DIN 43651
(EN 175201-804)
6+PE
IP 65

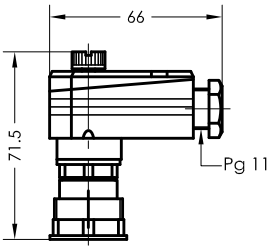

Serie M12
IP 67

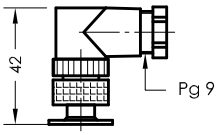

Technical data

Description

The level temperature regulator, type NR 50 - MA designed for container installation, is a contact less electromagnetic switch serving for continuous teletransmission of liquid levels and temperature.
Via cables of any length, level and temperature can be continuously evaluated for automatic control and display. The level controller contains a resistance measuring chain and a Pt100 resistor.
The level and temperature dependent signal is converted in the integrated measuring transducer into a linear current change of 4-20 mA.

The level controller is maintenance-free when nondeposit media are used. Optionally fixed mounted bistable level contacts can be installed additionally.
The device must only be installed by specialists.

Max. viscosity 320mm²/S

Technical data

Switching tube	Brass / Stainless steel max.L = 1000mm
Connection flange	Polyamid with flat seal
Nominal pressure	1 bar max.
Float	Hard-PU SR40
Temperature of medium	100°C max.
Operating voltage	12V ... 30V DC
Measuring range	4-20 mA = 0-100°C
Thermal element	Pt100
Contact grid	7.5 mm
Load	RB = U-12V / 20mA
Mounting position	vertical ± 30°

Other temperature ranges on request

GOLDAMMER
REGELUNGSTECHNIK GMBH
SCHÖLLERSHEIDER STR. 15 PHONE (49) 2104/12093
P.O.BOX 10 02 17 FAX (49) 2104/12028
D-40802 METTMANN www.Goldammer-Regelungstechnik.com

NR 1/2" - 3/4" - M20 - M24 - MA(O)(T) - Art.Nr. ...

Level - temperature controller with resistance measuring chain and resistance thermometer, output 4-20 mA

serial No.	Date
MA-GB- 305a/1	08/17

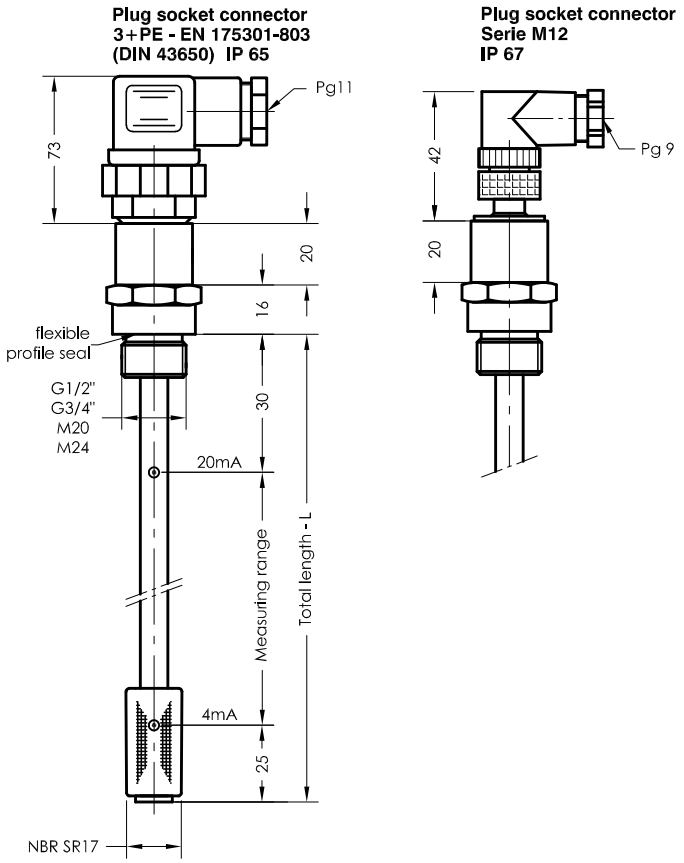

Pin assignment

Plug securing
power supply

MAO
3-polig + PE
EN 175301-803 (DIN 43650)

level	1 = +12-30V DC
	2 = level

MAO
M12 - 5 polig

level	1 = +12-30V DC
	4 = level

MAT
3-polig + PE
EN 175301-803 (DIN 43650)

level	1 = +12-30V DC
+temperature	2 = level
	3 = temperature

MAT
M12 - 5-polig

level	1 = +12-30V DC
+temperature	4 = level
	2 = temperature

Order code

Order length L	Designation	Article No. EN 175301-803 3+PE (DIN 43650)	Article No. M12
250	NR 1/2"-MAO-SR17-L250	MA305A/1.1	MA305A/1.17
370	NR 1/2"-MAO-SR17-L370	MA305A/1.2	MA305A/1.18
250	NR 1/2"-MAT-SR17-L250	MA305A/1.3	MA305A/1.19
370	NR 1/2"-MAT-SR17-L370	MA305A/1.4	MA305A/1.20
250	NR M20-MAO-SR17-L250	MA305A/1.5	MA305A/1.21
370	NR M20-MAO-SR17-L370	MA305A/1.6	MA305A/1.22
250	NR M20-MAT-SR17-L250	MA305A/1.7	MA305A/1.23
370	NR M20-MAT-SR17-L370	MA305A/1.8	MA305A/1.24
250	NR 3/4"-MAO-SR17-L250	MA305A/1.9	MA305A/1.25
370	NR 3/4"-MAO-SR17-L370	MA305A/1.10	MA305A/1.26
250	NR 3/4"-MAT-SR17-L250	MA305A/1.11	MA305A/1.27
370	NR 3/4"-MAT-SR17-L370	MA305A/1.12	MA305A/1.28
250	NR M24-MAO-SR17-L250	MA305A/1.13	MA305A/1.29
370	NR M24-MAO-SR17-L370	MA305A/1.14	MA305A/1.30
250	NR M24-MAT-SR17-L250	MA305A/1.15	MA305A/1.31
370	NR M24-MAT-SR17-L370	MA305A/1.16	MA305A/1.32

Specimen order
Article No. MA305A/1.19
NR 1/2"-MAT-SR17-L250-M12

MAT = level + temperature
MAO = level

Technical data

Description

The level temperature regulator, type NR 1/2"-3/4"-M20-M24-MA(O)(T) designed for container installation, is a contact less electromagnetic switch serving for continuous teletransmission of liquid levels and temperature.
Via cables of any length, level and temperature can be continuously evaluated for automatic control and display.
The level controller contains a resistance measuring chain and a Pt100 resistor.
The level and temperature dependent signal is converted in the integrated measuring transducer into a linear current change of 4-20 mA.

The level controller is maintenance-free for nondeposit media.
The device has to be installed by specialists only.

On request in stainless steel execution available.

Max. viscosity 150mm²/S

Technical data

Switching tube	Brass, max.L = 370mm
Connection thread	Brass G1/2" SW27
	Brass G3/4" SW32
	Brass M20 x 1,5
	Brass M24 x 1,5
Nominal pressure	1 bar max.
Float	NBR SR17
Temperature of medium	80°C max.
Plug socket connector	- 3+PE - EN 175301-803 (DIN 43650) IP65
	- Serie M12 IP67
Operating voltage	12V ... 30V DC
Measuring range	4-20 mA = 0-100°C
Thermal element	Pt100
Contact grid	5 mm
Load	RB = U-12V / 20mA
Mounting position	vertical ± 30°

Other temperature ranges on request

GOLDAMMER
REGELUNGSTECHNIK GMBH
SCHÖLLERSHEIDER STR. 15 PHONE (49) 2104/12093
P.O.BOX 10 02 17 FAX (49) 2104/12028
D-40802 METTMANN www.Goldammer-Regelungstechnik.com

NR 1" - 11/4" - MA

Level - temperature controller with resistance measuring chain and resistance thermometer, output 4-20 mA

serial No.	Date
MA-GB- 305b	11/17

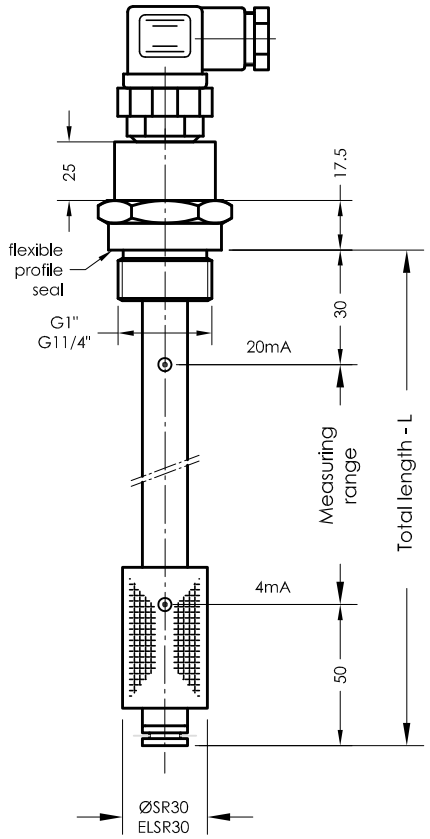

Pin assignment

Plug securing power supply

3-polig + PE
EN 175301-803 (DIN 43650)

level	1 = +12-30V DC
	2 = level

M12 - 5 polig

level	1 = +12-30V DC
	4 = level

3-polig + PE
EN 175301-803 (DIN 43650)

level	1 = +12-30V DC
+ temperature	2 = level
	3 = temperature

M12 - 5-polig and 6+PE - EN 175201-804 (DIN 43651)

level	1 = +12-30V DC
+ temperature	4 = level
	2 = temperature

seperate	1 = +12-30V DC
level	4 = level
+ temperature	2 = +12-30V DC
	3 = temperature

Order code

Specimen order

NR 1" - MA - SR30 - L370 - T - 0 - MS - M12

Tank connection:
1"
11/4"

Float type
SR30
ELSR 30

Total length-L switching tube (mm)
Standard length (special length)

L=250	L=700
L=370	L=800
L=500	L=900
L=600	L=1000

T = temperature
0 = without temperature

0 = combined
1 = separate

Plug socket connector
3+PE
DIN 43651
M12

Execution
MS = Brass
VA = Connetionthread, Switching tube stainless steel

Connector variants

3+PE
EN 175301-803
(DIN 43650)
IP 65

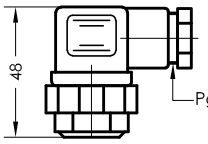

DIN 43651
(EN 175201-804)
6+PE
IP 65

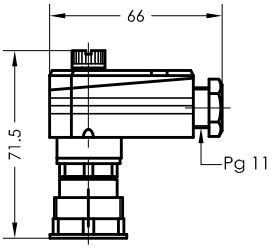

Serie M12
IP 67

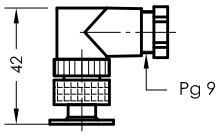

Technical data

Description

The level temperature regulator, type NR 1" - 11/4" - MA designed for container installation, is a contact less electromagnetic switch serving for continuous teletransmission of liquid levels and temperature.

Via cables of any length, level and temperature can be continuously evaluated for automatic control and display. The level controller contains a resistance measuring chain and a Pt100 resistor.

The level and temperature dependent signal is converted in the integrated measuring transducer into a linear current change of 4-20 mA.

The device must only be installed by specialists.

On request in stainless steel execution available.

Max. viscosity 150mm²/S

Technical data

Protective tube	Brass / Stainless steel max. L = 1000mm
Connection tread	Brass / Stainless steel G1" SW4 G11/4" SW 50
Nominal pressure	1 bar max.
Float	Hard-PU SR30 / ELSR 30
Temperature of medium	100°C max.
Operating voltage	12V ... 30V DC
Measuring range	4-20 mA = 0-100°C
Thermal element	Pt100
Contact grid	7.5 mm
Load	RB = $\frac{U-12V}{20mA}$
Mounting position	vertical ± 30°

Other temperature ranges on request

GOLDAMMER
REGELUNGSTECHNIK GMBH

SCHÖLLERSHEIDER STR. 15 PHONE (49) 2104/12093
P.O.BOX 10 02 17 FAX (49) 2104/12028
D-40802 METTMANN www.Goldammer-Regelungstechnik.com

NR 30 / 50 / 70 / 85 - V - MA

Level regulator for tank insert

serial No.	Date
MA-GB- 307b	08/17

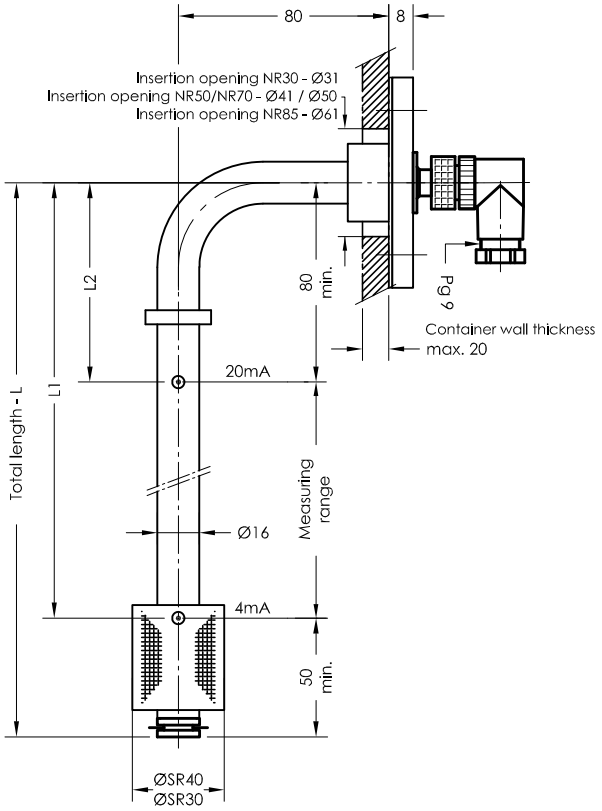

Pin assignment

Plug securing power supply

3-polig + PE
EN 175301-803 (DIN 43650)
level 1 = +12-30V DC
2 = level

M12 - 5 polig
level 1 = +12-30V DC
4 = level

3-polig + PE
EN 175301-803 (DIN 43650)
level + temperature 1 = +12-30V DC
2 = level
3 = temperature

M12 - 5-polig and 6 pol. + PE and 6+PE - EN 175201-804 (DIN 43651)
level + temperature 1 = +12-30V DC
4 = level
2 = temperature

seperate level + temperature 1 = +12-30V DC
4 = level
2 = +12-30V DC
3 = temperature

Order code

Specimen order

NR 50-V-MA-SR40-L270-T-0-M12

Connection
30
50
70
85

Float type
SR30
SR40

Total length-L
switching tube (mm)
standard length
L=250 L=500
L=370 L=800

Plug socket connector
3+PE
DIN 43651
M12
6 pol. + PE

0 = combined
1 = separate

T = temperature
0 = without temperature

Connector variants

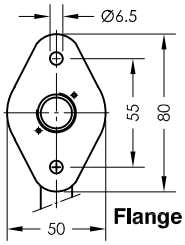

Flange 50

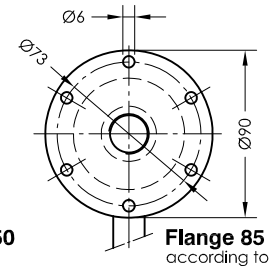

Flange 85
according to DIN24557 part 2

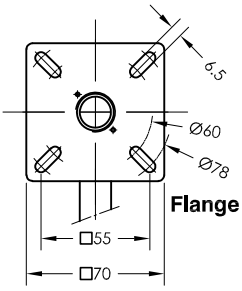

Flange 70

3+PE
EN 175301-803
(DIN 43650)
IP 65

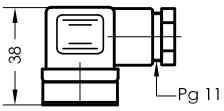

DIN 43651
(EN 175201-804)
6+PE
IP 65

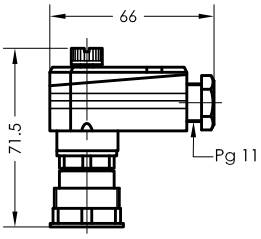

Serie M12
IP 67

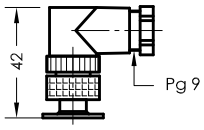

Technical data

Description

The level temperature regulator, type NR 30 / 50 / 70 / 85 - V - MA designed for container installation, is a contact less electromagnetic switch serving for continuous teletransmission of liquid levels and temperature.
Via cables of any length, level and temperature can be continuously evaluated for automatic control and display. The level controller contains a resistance measuring chain and a Pt100 resistor.
The level and temperature dependent signal is converted in the integrated measuring transducer into a linear current change of 4-20 mA.
Optionally fixed mounted bistable level contacts can be installed additionally.

The level controller is maintenance-free when nondeposit media are used.

The device must only be installed by specialists.

Max. viscosity SR30 - 150mm²/S
SR40 - 320mm²/S

Technical data

Switching tube	Brass max.L = 800mm
Connection flange	Polyamide with flat seal
Float	SR30 / SR 40
Nominal pressure	1 bar max.,
Operating voltage	12V ... 30V DC
Measuring range	4-20 mA = 0-100 °C
Thermal element	Pt100
Contact pitch	7,5 mm
Load	RB = U-12V / 20mA
Mounting position	vertical ± 30°

Other temperature ranges on request

GOLDAMMER
REGELUNGSTECHNIK GMBH
SCHÖLLERSHEIDER STR. 15 PHONE (49) 2104/12093
P.O.BOX 10 02 17 FAX (49) 2104/12028
D-40802 METTMANN www.Goldammer-Regelungstechnik.com

NR 70 - MA

Level - temperature controller with resistance measuring chain and resistance thermometer, output 4-20 mA

serial No.	Date
MA-GB- 307c	12/18

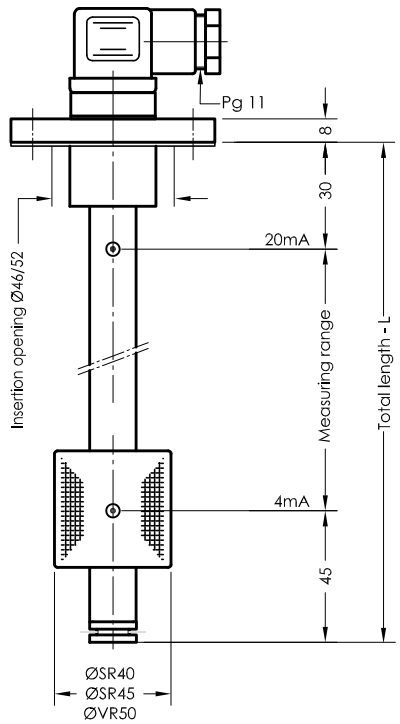

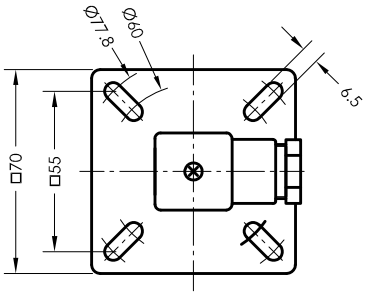

Pin assignment

Plug securing
power supply

3-polig + PE
EN 175301-803 (DIN 43650)

level	1 = +12-30V DC 2 = level

M12 - 5 polig

level	1 = +12-30V DC 4 = level

3-polig + PE
EN 175301-803 (DIN 43650)

level + temperature	1 = +12-30V DC 2 = level 3 = temperature

M12 - 5-polig
and
6 pol. + PE
and
6+PE - EN 175201-804
(DIN 43651)

level + temperature	1 = +12-30V DC 4 = level 2 = temperature
seperate level + temperature	1 = +12-30V DC 4 = level 2 = +12-30V DC 3 = temperature

Order code

Specimen order

NR 70 - MA - SR45 - L300 - T - 0 - MS - M12

Float type
SR40 with attachment 25 mm
SR45
VR50

Total length-L
switching tube (mm)
Standard length (special length)

L=250	L=1000
L=370	L=1100
L=500	L=1200
L=600	L=1300
L=700	L=1400
L=800	L=1500
L=900	

T = temperature
0 = without temperature

0 = combined
1 = separate

Execution
MS = Brass
VA = Flange, Switching tube and float stainless steel
VAPA = Flange PA, Switching tube stainless steel

Plug socket connector
3+PE
DIN 43651
M12

Connector variants

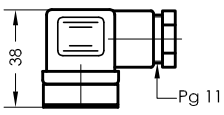

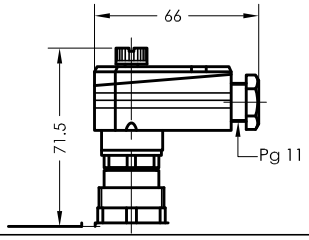

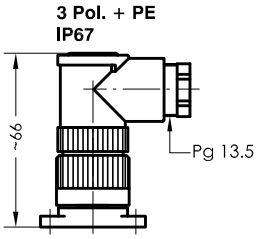

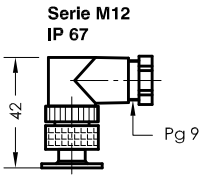

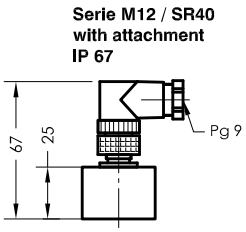

Technical data

Description

The level temperature regulator, type NR 70 - MA designed for container installation, is a contact less electromagnetic switch serving for continuous teletransmission of liquid levels and temperature.
Via cables of any length, level and temperature can be continuously evaluated for automatic control and display. The level controller contains a resistance measuring chain and a Pt100 resistor.
The level and temperature dependent signal is converted in the integrated measuring transducer into a linear current change of 4-20mA.
Optionally fixed mounted bistable level contacts can be installed additionally.

The level controller is maintenance-free when nondeposit media are used.

The device must only be installed by specialists.

Max. viscosity SR 40 / SR 45 - 320mm²/S
VR 50 - 320mm²/S

Technical data

Switching tube	Brass or stainless steel max.L = 2000mm
Connection flange	Polyamide or stainless steel with flat seal
Nominal pressure	1 bar max. - float Hard-PU SR40 / SR45 10 bar max. - float, Flange stainless steel VR50
Operating voltage	12V ... 30V DC
Measuring range	4-20 mA = 0-100 °C
Thermal element	Pt100
Contact pitch	7,5 mm
Load	RB = U-12V / 20mA
Mounting position	vertical ± 30°

Other temperature ranges on request

GOLDAMMER
REGELUNGSTECHNIK GMBH
SCHÖLLERSHEIDER STR. 15
P.O.BOX 10 02 17
D-40802 METTMANN
PHONE (49) 2104/12093
FAX (49) 2104/12028
www.Goldammer-Regelungstechnik.com

NR 85 - MA

Level - temperature controller with resistance measuring chain and resistance thermometer, output 4-20 mA

serial No.	Date
MA-GB- 308	12/18

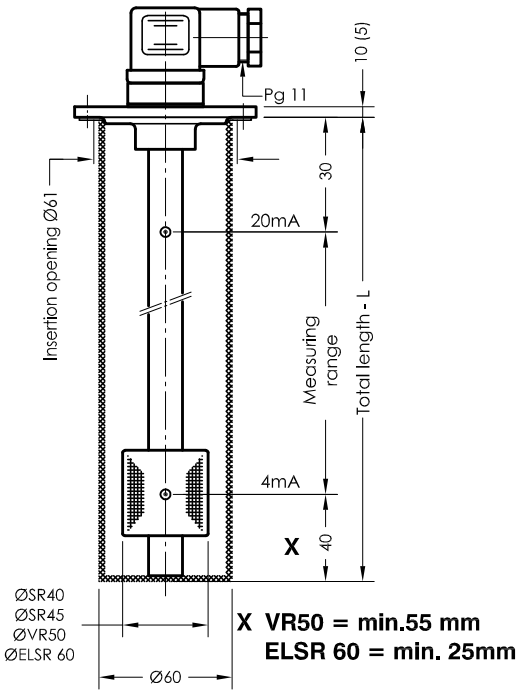

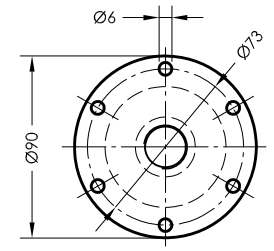

according to DIN24557 part 2

Pin assignment

Plug securing power supply

3-polig + PE
EN 175301-803 (DIN 43650)

level	1 = +12-30V DC
	2 = level

M12 - 5 polig

level	1 = +12-30V DC
	4 = level

3-polig + PE
EN 175301-803 (DIN 43650)

level	1 = +12-30V DC
+ temperature	2 = level
	3 = temperature

M12 - 5-polig
and
6 pol. + PE
and
6+PE - EN 175201-804 (DIN 43651)

level	1 = +12-30V DC
+ temperature	4 = level
	2 = temperature

seperate	1 = +12-30V DC
level	4 = level
+ temperature	2 = +12-30V DC
	3 = temperature

Order code

Specimen order

NR 85-MAS-SR45-L300-T-0-MS-M12

MA = without protective tube
MAS = with protective tube

Float type
SR40 with attachment 25mm
SR45
VR50
ELSR 60

Total length-L
switching tube (mm)

Standard length	(special length)	
L=250	L=900	L=1500
L=370	L=1000	L=1600
L=500	L=1100	L=1700
L=600	L=1200	L=1800
L=700	L=1300	L=1900
L=800	L=1400	L=2000

T = temperature
0 = without temperature

Plug socket connector
3+PE
DIN 43651
M12
3 pol. + PE

Execution
MS = Brass
VA = Flange, Switching tube and float stainless steel
VAPA = Flange PA, Switching tube stainless steel

0 = combined
1 = separate

Connector variants

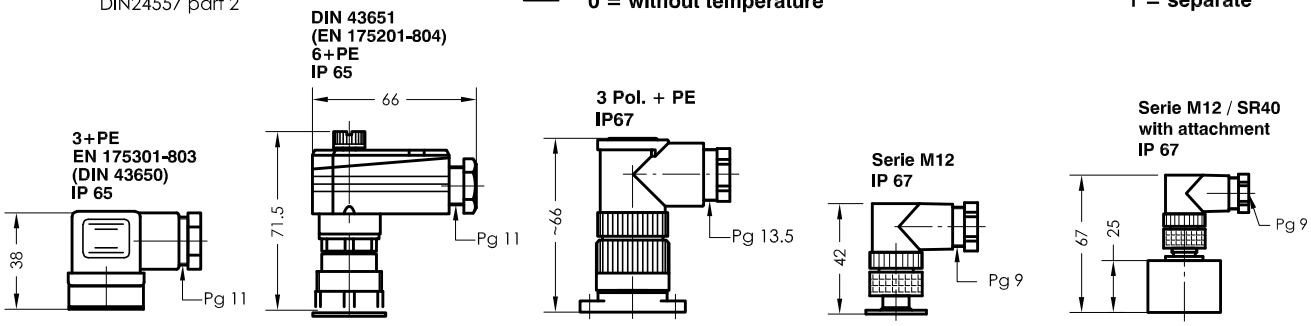

Technical data

Description

The level temperature regulator, type NR 85 - MA designed for container installation, is a contact less electromagnetic switch serving for continuous teletransmission of liquid levels and temperature.
Via cables of any length, level and temperature can be continuously evaluated for automatic control and display.
The level controller contains a resistance measuring chain and a Pt100 resistor.
The level and temperature dependent signal is converted in the integrated measuring transducer into a linear current change of 4-20mA. Optionally fixed mounted bistable level contacts can be installed additionally.

The level controller is maintenance-free when nondeposit media are used.

The device must only be installed by specialists.

Max. viscosity SR 45 - 320mm²/S
VR 50 - 320mm²/S

Technical data

Protective tube	Stainless steel
Switching tube	Brass or stainless steel max. L 2000mm
Connection flange	Polyamide or stainless steel with flat seal
Nominal pressure	1 bar max. - float Hard-PU SR40, SR45
	10 bar max. - float , Flange stainless steel VR50 ELSR 60
Temperature of medium	100°C max.
Operating voltage	12V ... 30V DC
Measuring range	4-20 mA = 0-100 °C
Thermal element	Pt100
Contact pitch	7,5 mm
Load	RB = U-12V / 20mA
Mounting position	vertical ± 30°

Other temperature ranges on request

GOLDAMMER
REGELUNGSTECHNIK GMBH
SCHÖLLERSHEIDER STR. 15 PHONE (49) 2104/12093
P.O.BOX 10 02 17 FAX (49) 2104/12028
D-40802 METTMANN www.Goldammer-Regelungstechnik.com

NR 85 - MA - 150°C max

Level - temperature controller with resistance measuring chain and resistance thermometer, output 4-20 mA

serial No.	Date
MA-GB- 308a	04/18

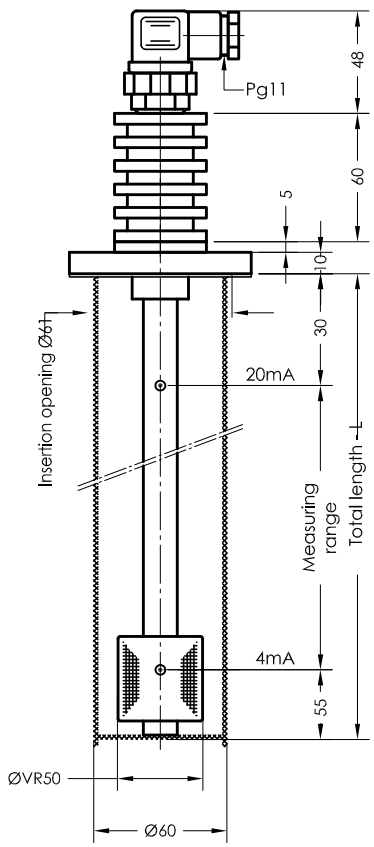

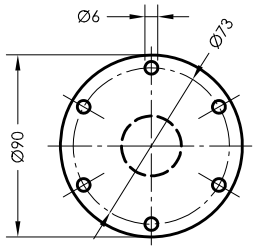

according to DIN24557 part 2

Pin assignment

Plug securing
power supply

3-polig + PE
EN 175301-803 (DIN 43650)

level	1 = +12-30V DC
	2 = level

M12 - 5 polig

level	1 = +12-30V DC
	4 = level

3-polig + PE
EN 175301-803 (DIN 43650)

level	1 = +12-30V DC
+ temperature	2 = level
	3 = temperature

M12 - 5-polig
and
6 pol. + PE
and
6+PE - EN 175201-804 (DIN 43651)

level	1 = +12-30V DC
+ temperature	4 = level
	2 = temperature

seperate	1 = +12-30V DC
level	4 = level
+ temperature	2 = +12-30V DC
	3 = temperature

Order code

Specimen order

NR 85-MAS-VR50-L250-T-O-VA-M12-150°C

MA = without protective tube
MAS = with protective tube

Float type
VR50

Total length-L
switching tube (mm)
standard length
L=250 L=800
L=370 L=1000
L=500 L=1200

T = temperature
0 = without temperature

Plug socket connector
3+PE
DIN 43651
M12
3 pol. + PE

Execution
VA = Flange, Switching tube and float stainless steel

0 = combined
1 = separate

Connector variants

3+PE
EN 175301-803
(DIN 43650)
IP 65

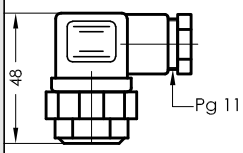

DIN 43651
(EN 175201-804)
6+PE
IP 65

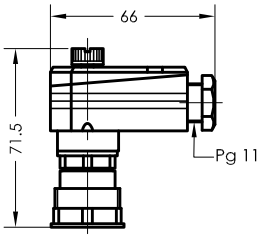

3 Pol. + PE
IP67

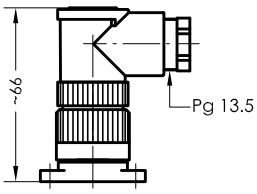

Serie M12
IP 67

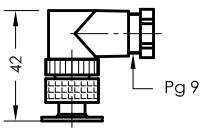

Technical data

Description

The level temperature regulator, type NR 85 - MA designed for container installation, is a contact less electromagnetic switch serving for continuous teletransmission of liquid levels and temperature.
Via cables of any length, level and temperature can be continuously evaluated for automatic control and display. The level controller contains a resistance measuring chain and a Pt100 resistor.
The level and temperature dependent signal is converted in the integrated measuring transducer into a linear current change of 4-20 mA. The level controller is maintenance-free when nondeposit media are used.

The circulation of air of cooling fins must be ensured.
The device must only be installed by specialists.

Max. viscosity SR40/SR45 - 320mm²/S
VR50 - 320mm²/S

Technical data

Protective tube	Stainless steel
Switching tube	Stainless steel max. L 3000mm
Connection flange	Stainless steel with flat seal Viton
Nominal pressure	1 bar max.,
Float	Stainl. steel VR50
Temperature of medium	150°C max.
Operating voltage	12V ... 30V DC
Measuring range	4-20 mA / 0-100% / 0-160°C
Temperature range	0 - 160°C
Thermal element	Pt100
Contact pitch	7,5 mm
Load	RB = U-12V / 20mA
Mounting position	vertical ± 30°

GOLDAMMER
REGELUNGSTECHNIK GMBH
SCHÖLLERSHEIDER STR. 15 PHONE (49) 2104/12093
P.O.BOX 10 02 17 FAX (49) 2104/12028
D-40802 METTMANN www.Goldammer-Regelungstechnik.com

NR 85 - MA - V

Level - temperature controller with resistance measuring chain and resistance thermometer, output 4-20 mA

serial No.	Date
MA-GB- 308b	04/18

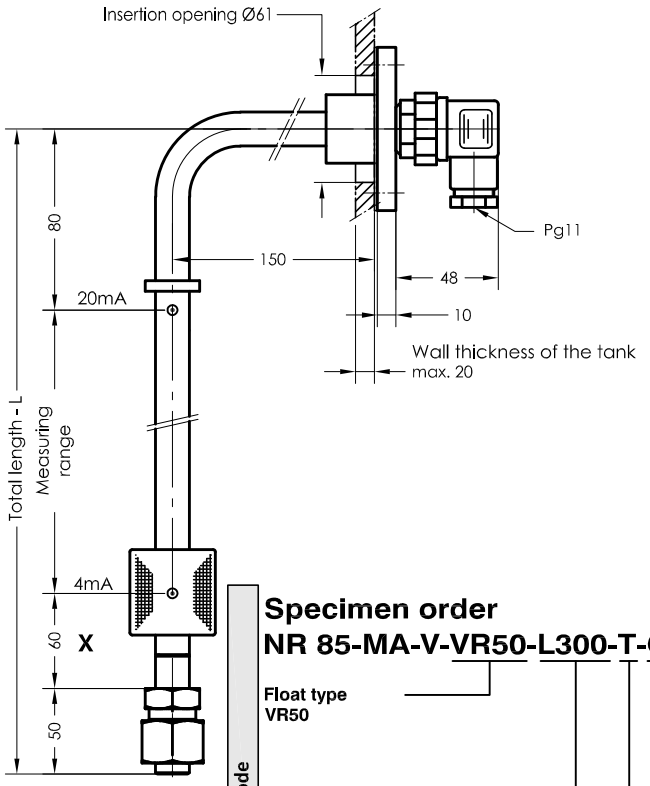

Specimen order

NR 85-MA-V-VR50-L300-T-O-VA-M12

Order code

- Float type VR50
- Total length-L switching tube (mm)
- T = temperature / 0 = without temperature
- 0 = combined / 1 = separate
- Execution VA = Flange, Switching tube and float stainless steel
- Plug socket connector 3+PE DIN 43651 M12 3 pol. + PE

Pin assignment

Plug securing
power supply

3-polig + PE
EN 175301-803 (DIN 43650)
level 1 = +12-30V DC
2 = level

M12 - 5 polig
level 1 = +12-30V DC
4 = level

3-polig + PE
EN 175301-803 (DIN 43650)
level 1 = +12-30V DC
+ temperature 2 = level
3 = temperature

M12 - 5-polig
and
6 pol. + PE
and
6+PE - EN 175201-804 (DIN 43651)
level 1 = +12-30V DC
+ temperature 4 = level
2 = temperature

seperate 1 = +12-30V DC
level 4 = level
+ temperature 2 = +12-30V DC
3 = temperature

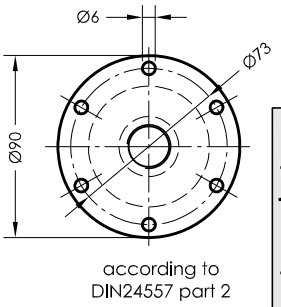

Connector variants

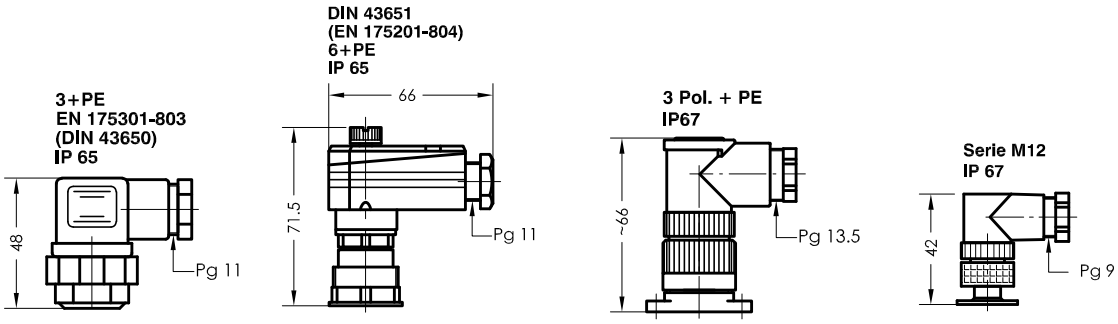

Technical data

Description

The level temperature regulator, type NR 85 - MA designed for container installation, is a contact less electromagnetic switch serving for continuous teletransmission of liquid levels and temperature.
Via cables of any length, level and temperature can be continuously evaluated for automatic control and display. The level controller contains a resistance measuring chain and a Pt100 resistor.
The level and temperature dependent signal is converted in the integrated measuring transducer into a linear current change of 4-20 mA. Optionally fixed mounted bistable level contacts can be installed additionally.
The level controller is maintenance-free when nondeposit media are used.
The device must only be installed by specialists.

Max. viscosity SR40/SR45 - 320mm²/S
VR50 - 320mm²/S

Technical data

Switching tube	Stainless steel max. L 2000mm
Connection flange	Stainless steel with flat seal
Nominal pressure	10 bar max. - float stainl. steel VR50
Temperature of medium	100°C max.
Operating voltage	12V ... 30V DC
Measuring range	4-20 mA = 0 - 100 °C
Thermal element	Pt100
Contact pitch	7,5 mm
Load	RB = U-12V / 20mA
Mounting position	vertical ± 30°

Other temperature ranges on request

GOLDAMMER
REGELUNGSTECHNIK GMBH
SCHÖLLERSHEIDER STR. 15 PHONE (49) 2104/12093
P.O.BOX 10 02 17 FAX (49) 2104/12028
D-40802 METTMANN www.Goldammer-Regelungstechnik.com

NR 95 - MA

Level - temperature controller with resistance measuring chain and resistance thermometer, output 4-20 mA

serial No. Date
MA-GB- 308/d 04/18

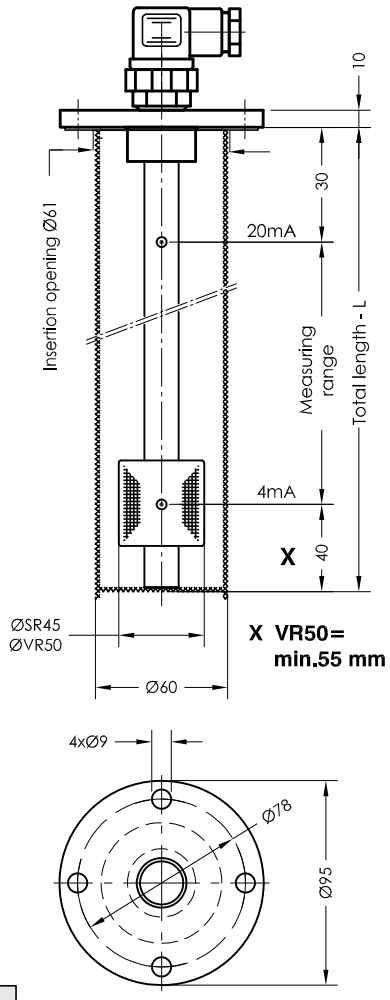

Pin assignment

Plug securing
power supply

3-polig + PE
EN 175301-803 (DIN 43650)

level	1 = +12-30V DC
	2 = level

M12 - 5 polig

level	1 = +12-30V DC
	4 = level

3-polig + PE
EN 175301-803 (DIN 43650)

level	1 = +12-30V DC
+ temperature	2 = level
	3 = temperature

M12 - 5-polig
and
6 pol. + PE
and
6+PE - EN 175201-804 (DIN 43651)

level	1 = +12-30V DC
+ temperature	4 = level
	2 = temperature

seperate	1 = +12-30V DC
level	4 = level
+ temperature	2 = +12-30V DC
	3 = temperature

Order code

Specimen order

NR 95-MAS-SR45-L300-T-O-MS-M12

MA = without protective tube
MAS = with protective tube

Float type
SR45
VR50

Total length-L
switching tube (mm)

Standard length	(special length)	
L=250	L=900	L=1500
L=370	L=1000	L=1600
L=500	L=1100	L=1700
L=600	L=1200	L=1800
L=700	L=1300	L=1900
L=800	L=1400	L=2000

T = temperature
0 = without temperature

0 = combined
1 = separate

Execution
MS = Brass
VA = Flange, Switching tube, Protective tube and float stainless steel

Plug socket connector
3+PE
DIN 43651
M12
3 pol. + PE

Connector variants

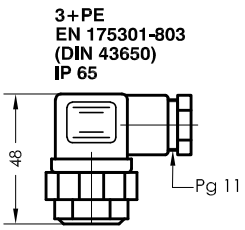

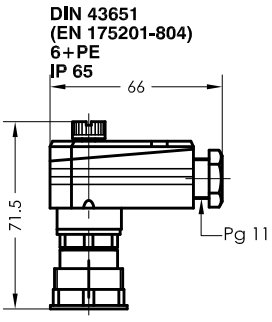

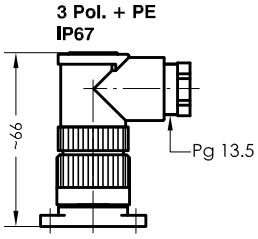

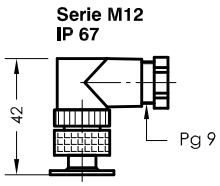

Technical data

Description

The level temperature regulator, type NR 95 - MA designed for container installation, is a contact less electromagnetic switch serving for continuous teletransmission of liquid levels and temperature.
Via cables of any length, level and temperature can be continuously evaluated for automatic control and display. The level controller contains a resistance measuring chain and a Pt100 resistor.
The level and temperature dependent signal is converted in the integrated measuring transducer into a linear current change of 4-20 mA. Optionally fixed mounted bistable level contacts can be installed additionally.

The level controller is maintenance-free when nondeposit media are used.
The device must only be installed by specialists.

Max. viscosity SR 45 - 320mm²/S
VR 50 - 320mm²/S

Technical data

Protective tube	Stainless steel
Switching tube	Brass or stainless steel
Connection flange	Stainless steel with flat seal
Nominal pressure	1 bar max. - float Hard-PU SR45 10 bar max. - flange and float VR50 stainless steel
Temperature of medium	100°C max.
Operating voltage	12V ... 30V DC
Measuring range	4-20mA = 0-100 °C
Thermal element	Pt100
Contact pitch	7,5 mm
Load	RB = U-12V / 20mA
Mounting position	vertical ± 30°

Other temperature ranges on request

GOLDAMMER
REGELUNGSTECHNIK GMBH
SCHÖLLERSHEIDER STR. 15 PHONE (49) 2104/12093
P.O.BOX 10 02 17 FAX (49) 2104/12028
D-40802 METTMANN www.Goldammer-Regelungstechnik.com

NR 85 - MA - L1 - L2

Level - temperature controller with resistance measuring chain and resistance thermometer, output 4-20 mA

serial No. Date
MA-GB- 308/1 08/17

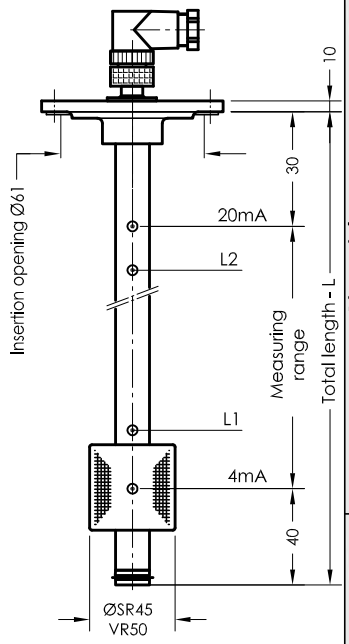

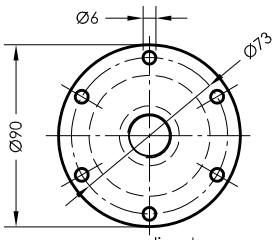

according to DIN24557 part 2

Pin assignment

Plug securing

1 +12-30V DC — 4-20mA — 2 Level
4 Level L1
5 Level L2
Function with increasing level

1 +12-30V DC — 4-20mA — 2 Level
4-20mA — 3 Temperature
4 Level L1
5 Level L2
Function with increasing level

Level contact -03-

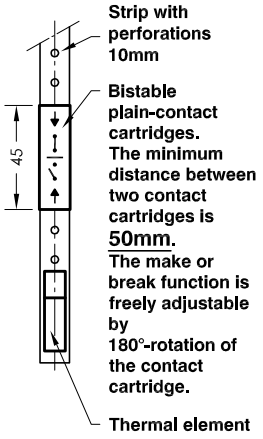

Order code

Specimen order

NR 85-MA-SR45-L440-01-T-0-MS-L1/400/S-L2/60/Ö-M12

MA = with protective tube
MAS = without protective tube

Float type
SR45
VR50

Total length-L switching tube (mm)
Standard length
L=250 L=800
L=370 L=1000
L=500 L=1200

Level contact type
01 = fixed, plain
03 = adjustable, plain

Plug socket connector
DIN 43651
M12

Switching point L1-L2/ mm from sealing edge
Ö = break
S = make
Function with increasing level

Execution
MS = Brass
VA = Flange, Protective tube, Switching tube and float stainless steel

0 = combined
1 = separate

T = temperature
O = without temperature

Connector variants

DIN 43651
(EN 175201-804)
6+PE
IP 65

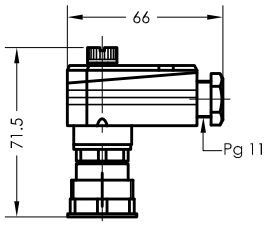

Serie M12
IP 67

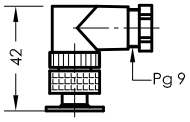

Technical data

Description

The level temperature regulator, type NR 85 - MA designed for container installation, is a contact less electromagnetic switch serving for continuous teletransmission of liquid levels and temperature.
Via cables of any length, level and temperature can be continuously evaluated for automatic control and display.
The level controller contains a resistance measuring chain and a Pt100 resistor.
The level and temperature dependent signal is converted in the integrated measuring transducer into a linear current change of 4-20 mA.

The level controller is maintenance-free when nondeposit media are used.
Optionally bistabile level contacts can be insert additionally.
The device must only be installed by specialists.

Max. viscosity SR 45 - 320mm²/S
VR 50 - 320mm²/S

Technical data

Protective tube	Stainless steel
Switching tube	Brass / Stainless steel max. L 2000mm
Connection flange	Polyamide / Stainless steel with flat seal
Nominal pressure	1 bar max. - float Hard-PU SR45 10 bar max. - flange + float VR50 stainless steel
Level contacts	bistable make / break optional fixed or adjustable
Switching potential	0,5A - 10W - 230V AC / DC
Temperature of medium	100°C max.
Operating voltage	12V ... 30V DC
Measuring range	4-20 mA = 0-100 °C
Switching potential	10W / VA
Thermal element	Pt100
Contact pitch	7,5 mm
Load	RB = U-12V / 20mA
Mounting position	vertical ± 30°

Other temperature ranges on request

GOLDAMMER
REGELUNGSTECHNIK GMBH
SCHÖLLERSHEIDER STR. 15 PHONE (49) 2104/12093
P.O.BOX 10 02 17 FAX (49) 2104/12028
D-40802 METTMANN www.Goldammer-Regelungstechnik.com

NR 85 - MA - Axial - Compensator

Level - temperature controller with resistance measuring chain and resistance thermometer, output 4-20 mA

serial No.	Date
MA-GB- 308/2	08/17

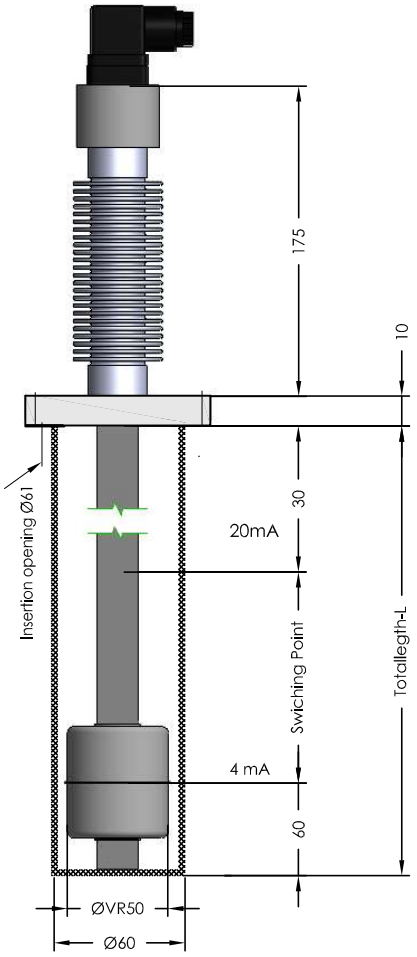

Level contact

Plug securing power supply

3-polig + PE
EN 175301-803 (DIN 43650)
level 1 = +12-30V DC
2 = level

M12 - 5 polig
level 1 = +12-30V DC
4 = level

3-polig + PE
EN 175301-803 (DIN 43650)
level 1 = +12-30V DC
+ temperature 2 = level
3 = temperature

M12 - 5-polig
and
6 pol. + PE
and
6+PE - EN 175201-804 (DIN 43651)
level 1 = +12-30V DC
+ temperature 4 = level
2 = temperature

seperate 1 = +12-30V DC
level 4 = level
+ temperature 2 = +12-30V DC
3 = temperature

Order code

Specimen order

NR 85-MAS-VR50-L370-T-0-VA-M12-AK

MA = without protective tube
MAS = with protective tube

Float type
SR45
VR50

Total length-L
switching tube (mm)
Standard length
L=250 L=800 L=1300
L=370 L=1000 L=1400
L=500 L=1200 L= 1500

T = temperature
0 = without temperature

Plug socket connector
3+PE
DIN 43651
M12
3 pol. +PE
6 pol. + PE

Execution
VA = Flange, Switching tube and float stainless steel

0 = combined
1 = separate

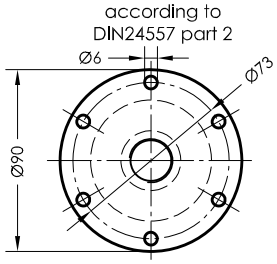

Plug socket connector

3+PE
EN
175301-803
(DIN 43650)
IP 65

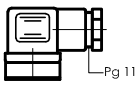

DIN 43651
(EN 175201-804)
6+PE
IP 65

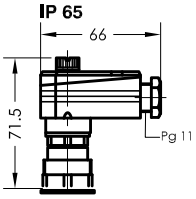

6 pol. + PE
IP 67

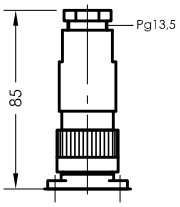

3 Pol. + PE
IP67

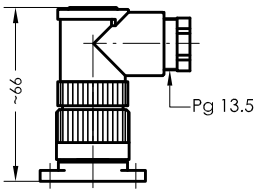

Serie M12
IP 67

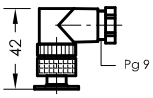

Technical data

Description

The level temperature regulator, type NR 85 - AK designed for container installation, is a contact less electromagnetic switch serving for continuous teletransmission of liquid levels and temperature.
Via cables of any length, level and temperature can be continuously evaluated for automatic control and display.
The level controller contains a resistance measuring chain and a Pt100 resistor.
The level and temperature dependent signal is converted in the integrated measuring transducer into a linear current change of 4-20mA. Optionally fixed mounted bistable level contacts can be installed additionally.
The level controller is maintenance-free when nondeposit media are used.
For all-round vibrations, movements, adjustments with Axial - Compensator.

The device must only be installed by specialists.

Max. viscosity 320mm²/S

Technical data

Protective tube	Stainless steel
Switching tube	Stainless steel max. L 2000mm
Connection flange	Stainless steel with flat seal
Nominal pressure	10 bar max. - Float Stainless steel VR50
Temperature of medium	100°C max.
Operating voltage	12V ... 30V DC
Measuring range	4-20 mA = 0-100 °C / 0-100%
Thermal element	Pt100
Contact pitch	7,5 mm
Load	RB = U-12V / 20mA
Mounting position	vertical ± 30°
Axial - Compensator	Stainless steel

Other temperature ranges on request

GOLDAMMER
REGELUNGSTECHNIK GMBH
SCHÖLLERSHEIDER STR. 15 PHONE (49) 2104/12093
P.O.BOX 10 02 17 FAX (49) 2104/12028
D-40802 METTMANN www.Goldammer-Regelungstechnik.com

NR 85 - MA - L1 - L4 - Axial - Compensator

Level - temperature regulator with resistance measuring chain and resistance thermometer, output 4-20mA

serial No.	Date
MA-GB- 308/3	11/17

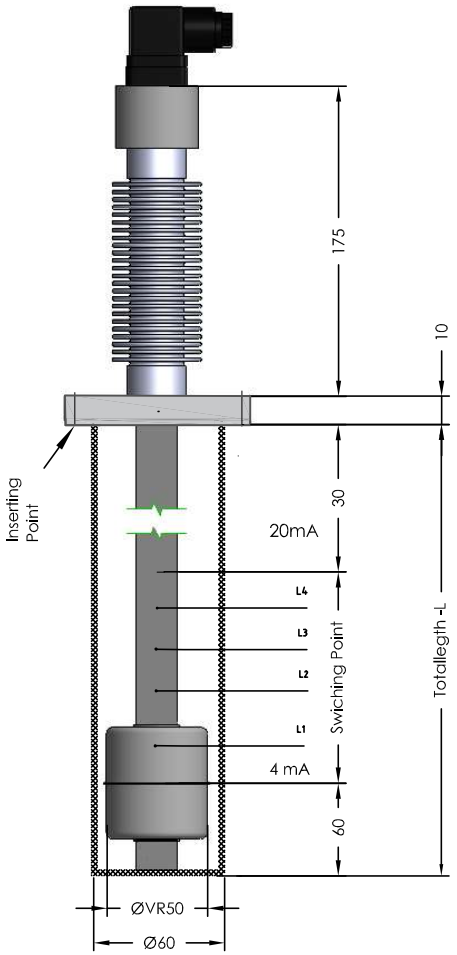

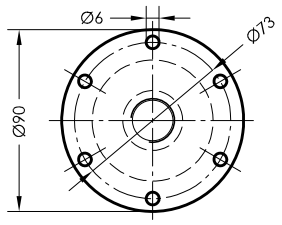

Level contact

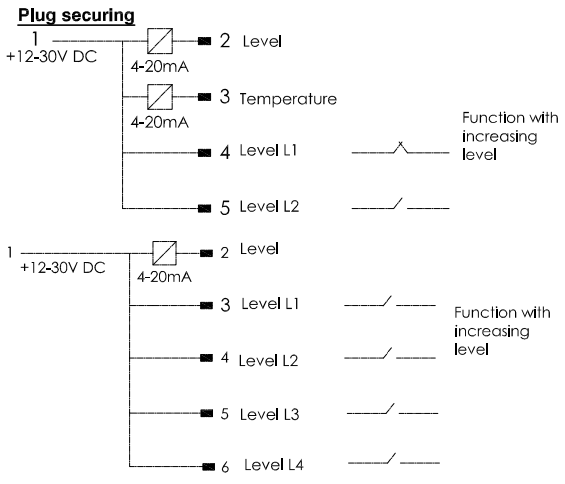

Order code

Specimen order

NR 85-MA-VR50-L370-01-T-VA-L1/330/S-L2/60/Ö-M12-AK

MA = with protective tube
MAS = without protective tube

Float type
VR50

Total length-L
switching tube (mm)
Standard length
L=250 L=800 L=1300
L=370 L=1000 L= 1400
L=500 L=1200 L= 1500

Level contact type
01 = fixed, plain

T = temperature
O = without temperature

01 = Fixed-conduct
Swiching point and Contuct function "S" Ö data is by rising level

Plug socket connector
DIN 43651
M12

Switching point L1-L2/ mm from sealing edge
Ö = break
S = make
Function with increasing level

Execution
VA = Flange, Protective tube, Switching tube and float stainless steel

Plug socket connector

DIN 43651
(EN 175201-804)
6+PE - IP 65

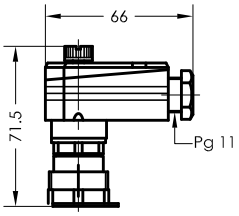

Serie M12
IP 67

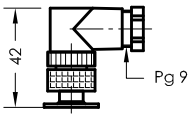

Technical data

Description

The level temperature regulator, type NR 85 - AK designed for container installation, is a contact less electromagnetic switch serving for continuous teletransmission of liquid levels and temperature.
Via cables of any length, level and temperature can be continuously evaluated for automatic control and display.
The level controller contains a resistance measuring chain and a Pt100 resistor.
The level and temperature dependent signal is converted in the integrated measuring transducer into a linear current change of 4-20 mA.

The level controller is maintenance-free when nondeposit media are used.
Optionally bistabile level contacts can be insert additionally.
For all-round vibrations, movements, adjustments with Axial - Compensator.

The device must only be installed by specialists.

Max. viscosity 320mm²/S

Technical data

Protective tube	Stainless steel
Switching tube	Stainless steel max. L 2000mm
Connection flange	Stainless steel with flat seal
Nominal pressure	10 bar max. - flange + float VR50 stainless steel
Level contacts	bistable make / break optional fixed or adjustable
Switching potential	Datasheet IN - GB - 003
Temperature of medium	100°C max.
Operating voltage	12V ... 30V DC
Measuring range	4-20 mA = 0-100 °C /0-100%
Thermal element	Pt100
Contact pitch	7,5 mm
Load	RB = $\frac{U-12V}{20mA}$
Mounting position	vertical ± 30°
Axial - Compensator	Stainless steel

Other temperature ranges on request

GOLDAMMER
REGELUNGSTECHNIK GMBH

SCHÖLLERSHEIDER STR. 15 PHONE (49) 2104/12093
P.O.BOX 10 02 17 FAX (49) 2104/12028
D-40802 METTMANN www.Goldammer-Regelungstechnik.com

NR 1/120 - MA

Level - temperature controller with resistance measuring chain and resistance thermometer, output 4-20 mA

serial No.	Date
MA-GB- 309	04/18

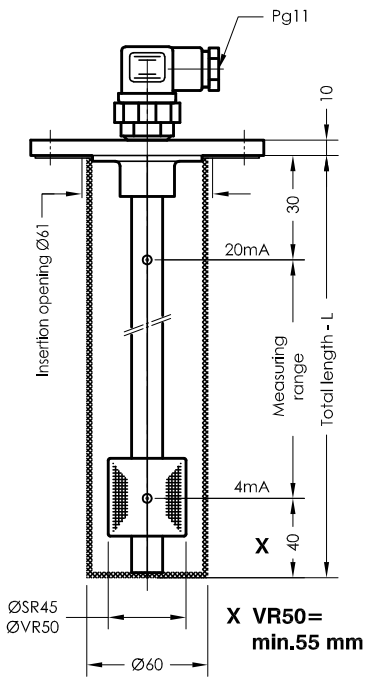

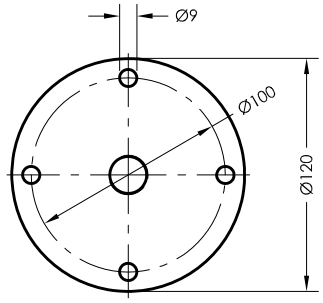

Pin assignment

Plug securing power supply

3-polig + PE
EN 175301-803 (DIN 43650)

level	1 = +12-30V DC
	2 = level

M12 - 5 polig

level	1 = +12-30V DC
	4 = level

3-polig + PE
EN 175301-803 (DIN 43650)

level + temperature	1 = +12-30V DC
	2 = level
	3 = temperature

M12 - 5-polig and 6 pol. + PE and 6+PE - EN 175201-804 (DIN 43651)

level + temperature	1 = +12-30V DC
	4 = level
	2 = temperature

seperate level + temperature	1 = +12-30V DC
	4 = level
	2 = +12-30V DC
	3 = temperature

Order code

Specimen order

NR 1/120-MAS-SR45-L300-T-O-MS-M12

MA = without protective tube
MAS = with protective tube

Float type
SR45
VR50

Total length-L
switching tube (mm)

Standard length (special length)

L=250	L=900	L=1500
L=370	L=1000	L=1600
L=500	L=1100	L=1700
L=600	L=1200	L=1800
L=700	L=1300	L=1900
L=800	L=1400	L=2000

T = temperature
0 = without temperature

0 = combined
1 = separate

Execution
MS = Brass
VA = Flange, Switching tube and float stainless steel

Plug socket connector
3+PE
DIN 43651
M12
3 pol. + PE

Connector variants

3+PE
EN 175301-803
(DIN 43650)
IP 65

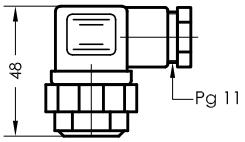

DIN 43651
(EN 175201-804)
6+PE
IP 65

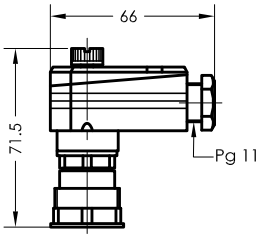

3 Pol. + PE
IP67

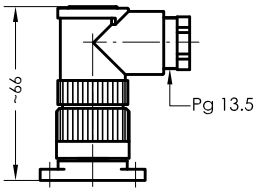

Serie M12
IP 67

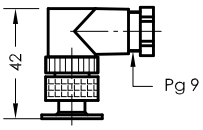

Technical data

Description

The level temperature regulator, type NR 1/120 - MA designed for container installation, is a contact less electromagnetic switch serving for continuous teletransmission of liquid levels and temperature.

Via cables of any length, level and temperature can be continuously evaluated for automatic control and display. The level controller contains a resistance measuring chain and a Pt100 resistor.
The level and temperature dependent signal is converted in the integrated measuring transducer into a linear current change of 4-20 mA.
Optionally fixed mounted bistable level contacts can be installed additionally.

The level controller is maintenance-free when nondeposit media are used.

The device must only be installed by specialists.

Max. Viscosity 320mm²/S

Technical data

Protective tube	Stainless steel
Switching tube	Brass or stainless steel max.L = 3000mm
Connection flange	Stainless steel with flat seal
Nominal pressure	1 bar max. 10 bar max. VR 50
Temperature of medium	100°C max.
Adapter box	ABS IP65, in either °C or °F
Operating voltage	12V ... 30V DC
Measuring range	4-20 mA = 0 - 100°C
Thermal element	Pt100
Contact pitch	7,5 mm
Load	RB = U-12V / 20mA
Mounting position	vertical ± 30°

Other temperature ranges on request

GOLDAMMER
REGELUNGSTECHNIK GMBH
SCHÖLLERSHEIDER STR. 15 PHONE (49) 2104/12093
P.O.BOX 10 02 17 FAX (49) 2104/12028
D-40802 METTMANN www.Goldammer-Regelungstechnik.com

NR G11/2" - MA

Level - temperature controller with resistance measuring chain and resistance thermometer, output 4-20 mA

serial No. Date
MA-GB- 309/1 04/18

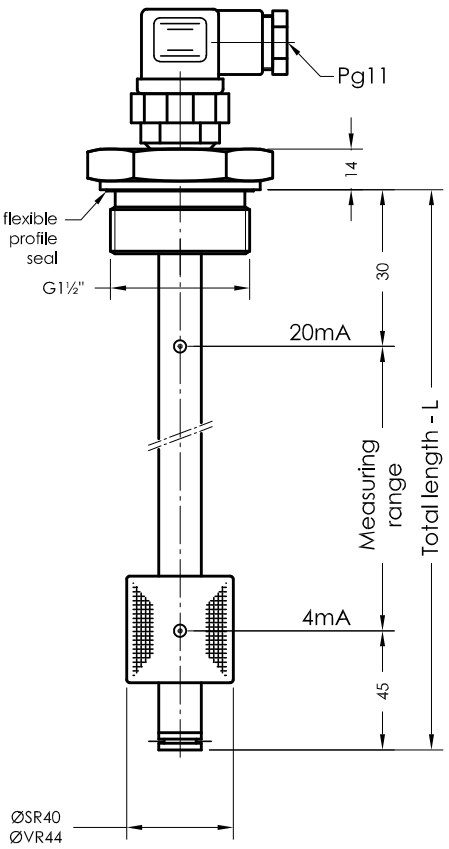

Pin assignment

Plug securing power supply

3-polig + PE
EN 175301-803 (DIN 43650)
level 1 = +12-30V DC
2 = level

M12 - 5 polig
level 1 = +12-30V DC
4 = level

3-polig + PE
EN 175301-803 (DIN 43650)
level + temperature 1 = +12-30V DC
2 = level
3 = temperature

M12 - 5-polig and 6 pol. + PE and 6+PE - EN 175201-804 (DIN 43651)
level + temperature 1 = +12-30V DC
4 = level
2 = temperature

seperate level + temperature 1 = +12-30V DC
4 = level
2 = +12-30V DC
3 = temperature

Order code

Specimen order

NR G11/2"-MA-SR40-L500-T-O-VA-M12

Float type
SR40
VR44

Total length-L
switching tube (mm)
Standard length (special length)

L=250	L=900	L=1500
L=370	L=1000	L=1600
L=500	L=1100	L=1700
L=600	L=1200	L=1800
L=700	L=1300	L=1900
L=800	L=1400	L=2000

T = temperature
0 = without temperature

0 = combined
1 = separate

Execution
MS = Brass
VA = Flange, Switching tube and float stainless steel

Plug socket connector
3+PE
DIN 43651
M12
3 pol. + PE

Connector variants

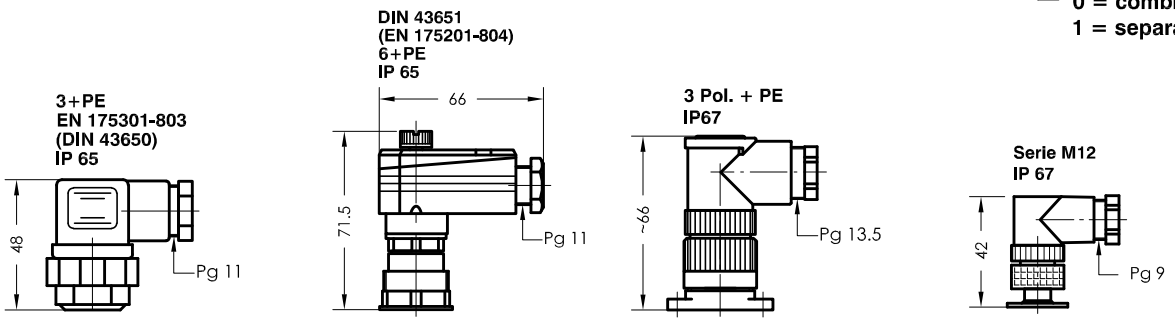

Technical data

Description

The level temperature regulator, type NR G11/2" - MA designed for container installation, is a contact less electromagnetic switch serving for continuous teletransmission of liquid levels and temperature.

Via cables of any length, level and temperature can be continuously evaluated for automatic control and display. The level controller contains a resistance measuring chain and a Pt100 resistor.

The level and temperature dependent signal is converted in the integrated measuring transducer into a linear current change of 4-20 mA.
Optionally fixed mounted bistable level contacts can be installed additionally.

The level controller is maintenance-free when nondeposit media are used.

The device must only be installed by specialists.

Max. Viscosity 320mm²/S

Technical data

Switching tube	Brass or stainless steel max. L = 3000mm
Connection	Stainless steel G11/2", SW 55
Nominal pressure	1 bar max. SR 40 16 bar max. VR44
Temperature of medium	120°C max.
Operating voltage	12V...30V DC
Measuring range	4-20 mA = 0 - 100°C
Temperature range	0-100°C
Thermal element	Pt100
Contact pitch	7,5 mm
Load	RB = U-12V / 20mA
Installed position	Vertical ± 30°

Other temperature ranges on request

GOLDAMMER
REGELUNGSTECHNIK GMBH
SCHÖLLERSHEIDER STR. 15 PHONE (49) 2104/12093
P.O.BOX 10 02 17 FAX (49) 2104/12028
D-40802 METTMANN www.Goldammer-Regelungstechnik.com

NR G2" - MA

Level - temperature controller with resistance measuring chain and resistance thermometer, output 4-20 mA

serial No.	Date
MA-GB- 310	04/18

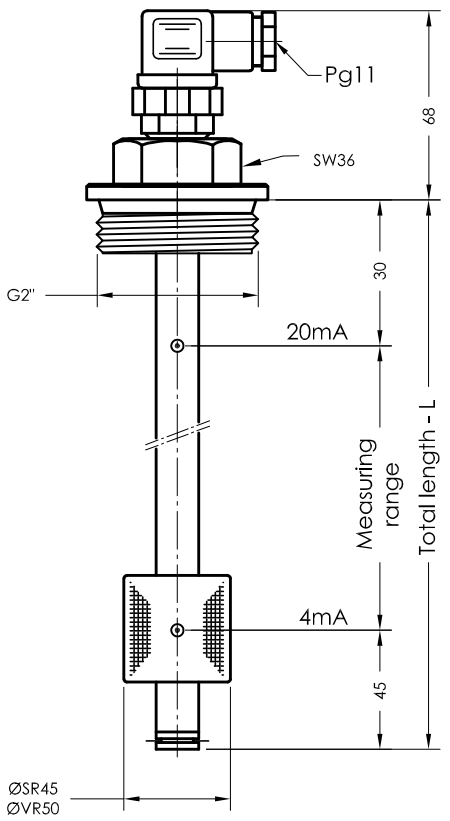

Pin assignment

Plug securing power supply

3-polig + PE
EN 175301-803 (DIN 43650)

level	1 = +12-30V DC
	2 = level

M12 - 5 polig

level	1 = +12-30V DC
	4 = level

3-polig + PE
EN 175301-803 (DIN 43650)

level	1 = +12-30V DC
+ temperature	2 = level
	3 = temperature

M12 - 5-polig and 6 pol. + PE and 6+PE - EN 175201-804 (DIN 43651)

level	1 = +12-30V DC
+ temperature	4 = level
	2 = temperature

seperate	1 = +12-30V DC
level	4 = level
+ temperature	2 = +12-30V DC
	3 = temperature

Order code

Specimen order

NR G2" -MA-VR50-L300-T-O-MS-M12

Float type
SR45
VR50

Total length-L- switching tube (mm)
Standard length (special length)

L=250	L=900	L=1500
L=370	L=1000	L=1600
L=500	L=1100	L=1700
L=600	L=1200	L=1800
L=700	L=1300	L=1900
L=800	L=1400	L=2000

T = temperature
0 = without temperature

Plug socket connector
3+PE
DIN 43651
M12
3 pol. + PE

Execution
MS = Brass
VA = Connetionthread, Switching tube and float stainless steel

0 = combined
1 = separate

Connector variants

3+PE
EN 175301-803
(DIN 43650)
IP 65

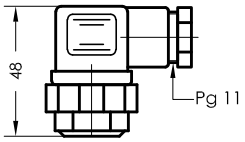

DIN 43651
(EN 175201-804)
6+PE
IP 65

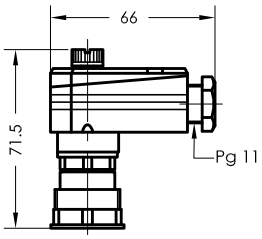

3 Pol. + PE
IP67

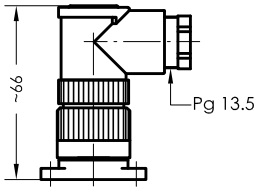

Serie M12
IP 67

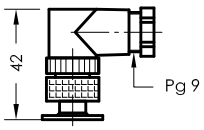

Technical data

Description

The level temperature regulator, type NR G2" - MA designed for container installation, is a contact less electromagnetic switch serving for continuous teletransmission of liquid levels and temperature.

Via cables of any length, level and temperature can be continuously evaluated for automatic control and display. The level controller contains a resistance measuring chain and a Pt100 resistor.

The level and temperature dependent signal is converted in the integrated measuring transducer into a linear current change of 4-20 mA.
Optionally fixed mounted bistable level contacts can be installed additionally.

The level controller is maintenance-free when nondeposit media are used.

The device must only be installed by specialists.

Max. Viscosity 320mm²/S

Technical data

Switching tube	Brass / Stainless steel max.L = 3000mm
Connection	galv. steel / Stainless steel G2", SW70, with ring seal Cu, DIN 7603
Nominal pressure	1 bar max. 10 bar max. VR50
Temperature of medium	100°C max.
Adapter box	ABS IP65, in either °C or °F
Operating voltage	4-20 mA = 0 - 100°C
Measuring range	0-100°C
Temperature range	Pt100
Thermal element	7,5 mm
Contact pitch	RB = U-12V / 20mA
Load	Vertical ± 30°
Installed position	

Other temperature ranges on request

GOLDAMMER
REGELUNGSTECHNIK GMBH

SCHÖLLERSHEIDER STR. 15 PHONE (49) 2104/12093
P.O.BOX 10 02 17 FAX (49) 2104/12028
D-40802 METTMANN www.Goldammer-Regelungstechnik.com

NR G2" - MA

Level - temperature controller with resistance measuring chain and resistance thermometer, output 4-20 mA

serial No.	Date
MA-GB- 310a	02/18

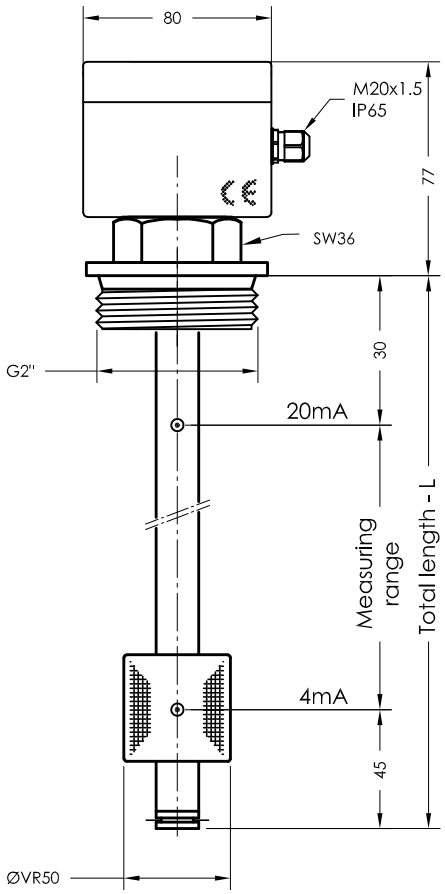

Order code

Specimen order

NR G2" -MA-VR50-L500-T-O-VA

Float type VR50

Total length-L- switching tube (mm)

T = temperature
0 = without temperature

Execution
VA = Connetionthread, Switching tube and float stainless steel

0 = combined
1 = separate

Terminal assignment

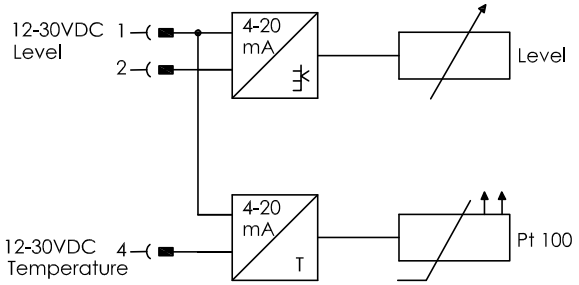

Terminal assignment

1 = +12-30V DC
2 = Level

1 = +12-30V DC
2 = Level
4 = Temperature

Technical data

Description

The level temperature regulator, type NR G2" - MA designed for container installation, is a contact less electromagnetic switch serving for continuous teletransmission of liquid levels and temperature.

Via cables of any length, level and temperature can be continuously evaluated for automatic control and display. The level controller contains a resistance measuring chain and a Pt100 resistor.

The level and temperature dependent signal is converted in the integrated measuring transducer into a linear current change of 4-20 mA.
Optionally fixed mounted bistable level contacts can be installed additionally.

The level controller is maintenance-free when nondeposit media are used.

The device must only be installed by specialists.

Max. Viscosity 320mm²/S

Technical data

Switching tube	Stainless steel max.L = 5000mm
Connection thread	Stainless steel G2", with ring seal Cu, DIN 7603
Nominal pressure	10 bar max.
Temperature of medium	-0 -100°C max.
Operating voltage	12V - 30V DC
Measuring range	4-20 mA = 0 - 100°C
Temperature range	0-100°C
Thermal element	Pt100
Contact pitch	7,5 mm
Load	RB = U-12V / 20mA
Installed position	Vertical ± 30°
Housing, with compact terminals	Aluminium 80x75x57 - IP65

Other temperature ranges on request

GOLDAMMER
REGELUNGSTECHNIK GMBH

SCHÖLLERSHEIDER STR. 15 PHONE (49) 2104/12093
P.O.BOX 10 02 17 FAX (49) 2104/12028
D-40802 METTMANN www.Goldammer-Regelungstechnik.com

NR 6/32 - MA

Level - temperature controller with resistance measuring chain and resistance thermometer, output 4-20 mA

serial No.	Date
MA-GB- 311	04/18

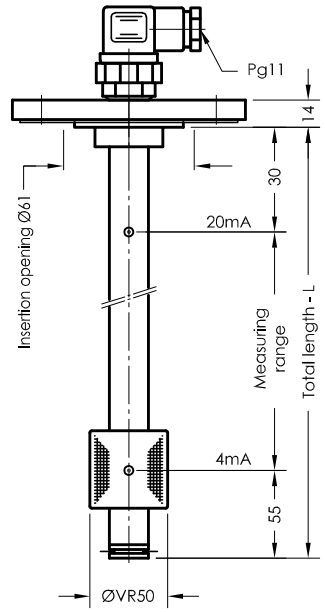

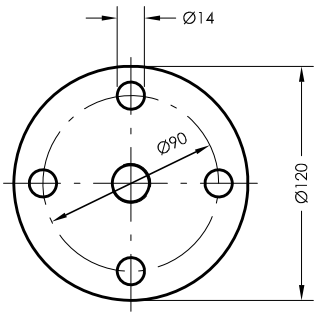

Pin assighnment

Plug securing
power supply

3-polig + PE
EN 175301-803 (DIN 43650)

level	1 = +12-30V DC
	2 = level

M12 - 5 polig

level	1 = +12-30V DC
	4 = level

3-polig + PE
EN 175301-803 (DIN 43650)

level	1 = +12-30V DC
+ temperature	2 = level
	3 = temperature

M12 - 5-polig
and
6 pol. + PE
and
6+PE - EN 175201-804 (DIN 43651)

level	1 = +12-30V DC
+ temperature	4 = level
	2 = temperature

seperate	1 = +12-30V DC
level	4 = level
+ temperature	2 = +12-30V DC
	3 = temperature

Order code

Specimen order

NR 6/32-MA-VR50-L300-T-O-MS-M12

Float type
VR50

Total length-L
switching tube (mm)

T = temperature
0 = without temperature

0 = combined
1 = separate

Plug socket connector
3+PE
DIN 43651
M12

Execution
MS = Brass
VA = Flange, Switching tube and float stainless steel

Connector variants

3+PE
EN 175301-803
(DIN 43650)
IP 65

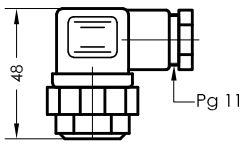

DIN 43651
(EN 175201-804)
6+PE
IP 65

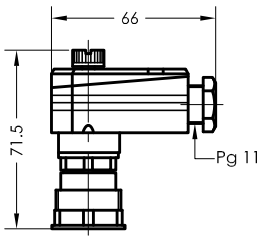

Serie M12
IP 67

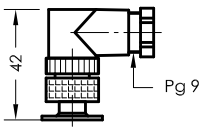

Technical data

Description

The level temperature regulator, type NR 6/32 - MA designed for container installation, is a contact less electromagnetic switch serving for continuous teletransmission of liquid levels and temperature.

Via cables of any length, level and temperature can be continuously evaluated for automatic control and display. The level controller contains a resistance measuring chain and a Pt100 resistor.
The level and temperature dependent signal is converted in the integrated measuring transducer into a linear current change of 4-20 mA.
Optionally fixed mounted bistable level contacts can be installed additionally.

The level controller is maintenance-free when nondeposit media are used.

The device must only be installed by specialists.

Max. Viscosity 320 mm²/S

Technical data

Switching tube	Brass or stainless steel max.L = 6000mm
Connection flange	Aluminium or stainless steel with flat seal
Nominal pressure	6 bar max./ 10 bar max.
Temperature of medium	100°C max.
Float	stainless steel VR50
Adapter box	ABS IP65, in either °C or °F
Operating voltage	4-20 mA = 0 - 100°C
Measuring range	0 - 100 °C
Temperature range	Pt100
Thermal element	7,5 mm
Contact pitch	RB = U-12V / 20mA
Load	
Mounting position	vertical ± 30°

Other temperature ranges on request

GOLDAMMER
REGELUNGSTECHNIK GMBH

SCHÖLLERSHEIDER STR. 15 PHONE (49) 2104/12093
P.O.BOX 10 02 17 FAX (49) 2104/12028
D-40802 METTMANN www.Goldammer-Regelungstechnik.com

Indicator

serie IND

- level-temperature regulator with LED display
- switching outputs for level and temperature
- output signal 4-20mA
- level regulator with standard length 250mm, 370mm, 500mm, 800mm, 1000mm, 1100mm, 1200mm, 1300mm, 1400mm and 1500 mm
- optional all executions also with remote installation
- NR 85 as 150°C version available

Indicator - TMA - 1

Level - temperature regulator with bistable level contacts
Temperature display and outputs 4-20mA
Optional PNP Temperature output

serial No. Date
IND - GB - 90 03/18

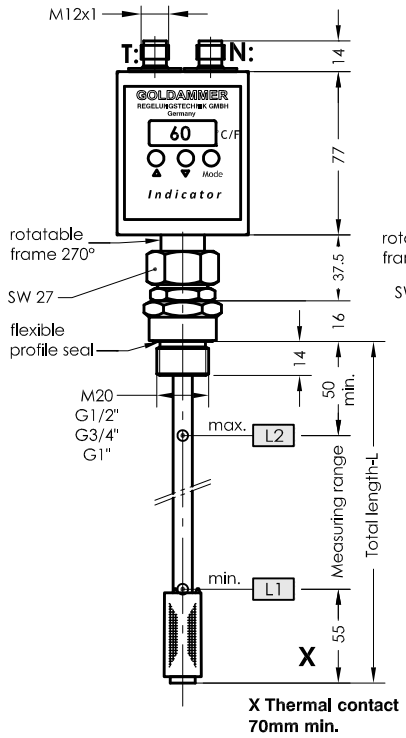

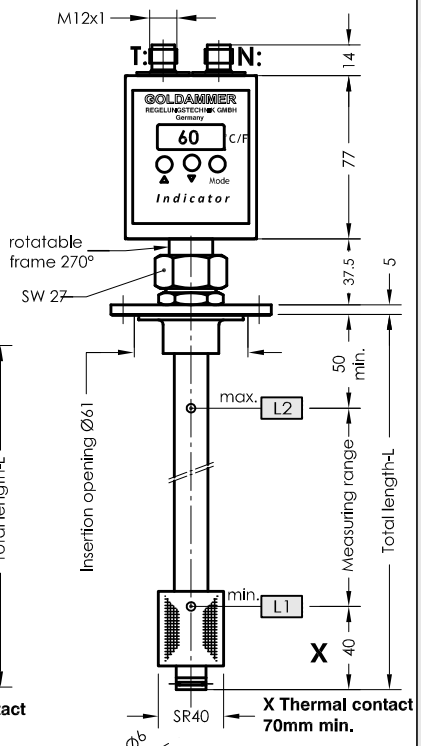

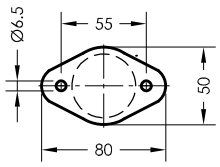

Flange 50
Insertion opening Ø41

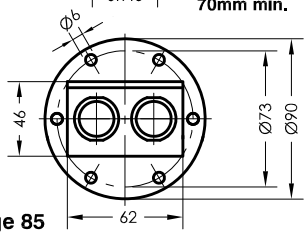

Flange 85
according to DIN24557 part 2

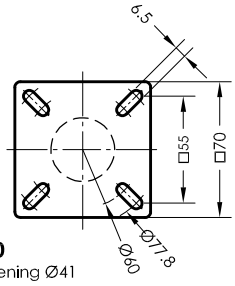

Flange 70
Insertion opening Ø41

Pin assignment

Level contact

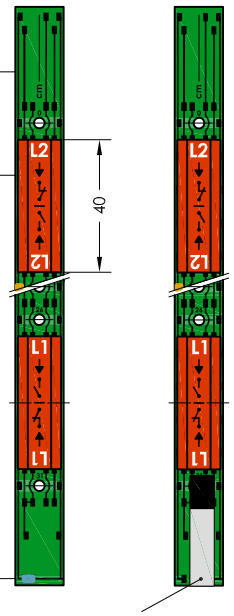

Contact strip grid 10mm

Cableless bistable single contact cartridge OK-L2

The minimum distance between two contact cartridges is 50mm.

The make or break function is freely adjustable by 180°-rotation of the contact cartridge. OK-L1

Pt100

Thermal element

Plug securing

N: 1 = Input L1 - L3
4 = L1
2 = L2
5 = L3

T: 1 = +12-30V DC
2 = Temperature 4 - 20mA
3 = GND - Indication
4 = Temperature T1 PNP (TF)
5 = Temperature T2 PNP
6 = Temperature T3 PNP
PNP Output freely programmable

Order code

Specimen order

NR85-TMA-1-SR40-L250-01-L1/200/S-2M12-T1-TF70Ö

Tank connection:
M20 - SB17
G1/2" - SB17
G3/4" - SR23
G1" - SR30
NR50 - SR40
NR70 - SR40
NR85 - SR40

Float type
SB17
SR23
SR30
SR40

Level contact type
01 = fixed, plain (L1-L3 max.)
OK = cableless contacts (L1+L2 max.)

M20, NR G1/2", G3/4" for level contact type 01 only

Total length-L
switching tube (mm)
standard length
L=250 L=370
L=500 L=800

Temperature-output
T0
T1
T2
T3

Thermal contact
TF10Ö
TF40Ö
TF50Ö
TF60Ö (S)
TF70Ö (S)
TF80Ö (S)
TF90Ö
(Ö preferred)

Technical data

Description

The Indicator TMA -1 for tank insert is a solenoid switch operating without contact with the function of monitoring and regulating liquid levels and temperatures.
The switching tube contains bistable protective gas contacts. They may be fixed or alternatively mounted. For fixed contacts, the contact intervals and their functions must be given. Plain contact cartridges can be subsequently adjusted for height. The function of make or break can then be altered by turning the cartridge through 180° degrees.
The permanent magnet built into the float switches the contacts when the level changes. The switching difference (hysteresis) is 4 mm. For temperature monitoring, the temperature dependent signal emitted from a Pt100 resistor mounted in the contact tube is converted with the installed transducer into a temperature linear current change of 4-20mA. The level controller is maintenance-free when nondeposit media are used. For inductive loads, a protective circuit must be provided (free-wheeling diode/RC element). The temperature indication is by means of an electronic circuit with an LED display that indicates the actual temperature, optionally in °C or °F.
The device must only be installed by specialists.
Other temperature ranges on request.
Max. viscosity ISO VG 68 / ISO VG 100

Technical data

Switch tube	Brass max. L = 800mm
Tank connection:	Polyamid with flat seal Connection thread: Brass
Nominal pressure	1 bar max.
Cabinet	Polycarbonate, IP67
Temperature of medium	80°C / 100°C max.
Float	Hard PU
Connection	M12 IP67 series - male connector
Operating voltage	12V ... 30V DC
Level contacts	bistable make/break optional fixed or adjustable
Display	LED 3-digit -10 - 100°C (°F)
Switching current	Datasheet IN - GB - 003
Working resistance	RB = U-12V / 20mA
Measuring range	4-20 mA / 0 - 100°C
Mounting position	vertical ± 30°
*Thermal contact	Sheet TR-GB-507
*Indicator	Sheet IND-GB

GOLDAMMER
REGELUNGSTECHNIK GMBH
SCHÖLLERSHEIDER STR. 15
P.O.BOX 10 02 17
D-40802 METTMANN
PHONE (49) 2104/12093
FAX (49) 2104/12028
www.Goldammer-Regelungstechnik.com

Indicator - TMA - 1 - R (remote installation)

Level - temperature regulator with bistable level contacts temperature display and outputs 4-20mA

Optional PNP Temperature output

serial No.	Date
IND-GB- 91	03/18

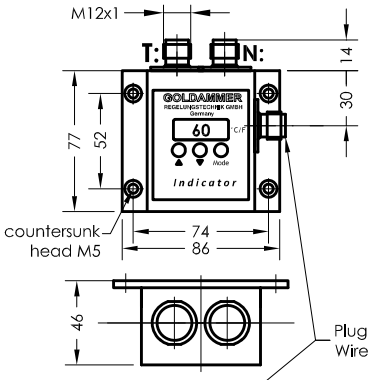

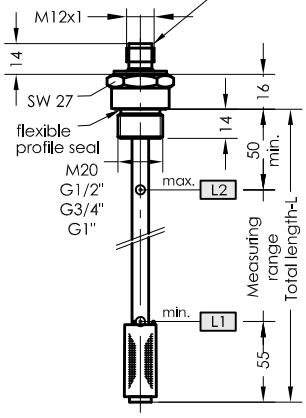

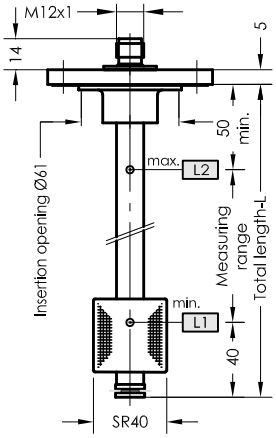

Plug securing

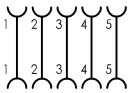

Level contact

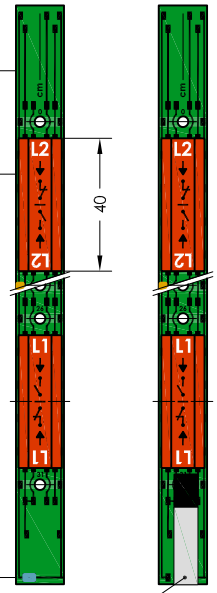

Contact strip grid 10mm

Cableless bistable single contact cartridge OK-L2

The minimum distance between two contact cartridges is 50mm.

The make or break function is freely adjustable by 180°-rotation of the contact cartridge. OK-L1

Pt100

Thermal element

Pin assignment

Plug securing

N: 1 = Input L1 - L3
4 = L1
2 = L2
5 = L3

T: 1 = +12-30V DC
2 = Temperature 4 - 20mA
3 = GND - Indication
4 = Fixed contact T1 PNP
5 = Temperature T2 PNP
6 = Temperature T3 PNP
PNP Output freely programmable

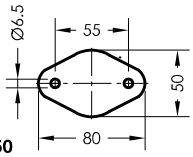

Flange 50
Insertion opening Ø41

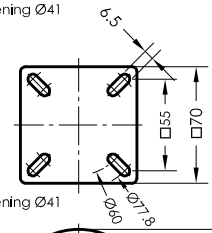

Flange 70
Insertion opening Ø41

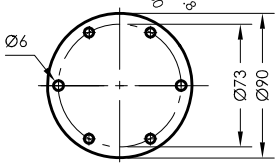

Flange 85
according to DIN24557 part 2

Order code

Specimen order

NR85-TMA-1-R-SR40-L250-01-L1/200/S-4M12-TF70Ö

Tank connection:
M20 - SB17
G1/2" - SB17
G3/4" - SR23
G1" - SR30 L
NR50 - SR40
NR70 - SR40
NR85 - SR40

Float type
SB17
SR23
SR30
SR40

Total length-L
switching tube (mm)
standard length
L=250
L=370
L=500
L=800

Level contact type
01 = fixed, plain (L1-L3 max.)
OK = cableless contacts (L1+L2 max.)

M20, NR G1/2", G3/4" for level contact type 01 only

Thermal contact
TF10Ö
TF40Ö
TF50Ö
TF60Ö (S)
TF70Ö (S)
TF80Ö (S)
TF90Ö
(Ö preferred)

Equipment

Art. Nr. 50100080 - connecting wire circuit serie M12 with 2 cable sockets 5-pole length 3m
Art. Nr. 50100079 - connecting wire circuit serie M12 with 2 cable sockets 8-pole length 3m
Art. Nr. 50100076 - connecting wire circuit serie M12 with 2 cable sockets 5-pole length 5m
Art. Nr. 50100077 - connecting wire circuit serie M12 with 2 cable sockets 8-pole length 5m
Other length available on request

Technical data

Description

The Indicator TMA -1 - R (remote installation) for tank insert is a solenoid switch operating without contact with the function of monitoring and regulating liquid levels and temperatures.
The switching tube contains bistable protective gas contacts. They may be fixed or alternatively mounted. For fixed contacts, the contact intervals and their functions must be given. Plain contact cartridges can be subsequently adjusted for height. The function of make or break can then be altered by turning the cartridge through 180° degrees.
The permanent magnet built into the float switches the contacts when the level changes.
The switching difference (hysteresis) is 4 mm. For temperature monitoring, the temperature dependent signal emitted from a Pt100 resistor mounted in the contact tube is converted with the installed transducer into a temperature linear current change of 4-20mA. The level controller is maintenance-free when nondeposit media are used. For remote installation, a low-loss connection between the display unit and sensor tube must be provided.
For inductive loads, a protective circuit must be provided (free-wheeling diode/RC element).
The temperature indication is by means of an electronic circuit with an LED display that indicates the actual temperature, optionally in °C or °F.
The device must only be installed by specialists.

Max. viscosity ISO VG 68 / ISO VG 100

Technical data

Switch tube	Brass - max L= 800
Tank connection:	Polyamid with flat seal Connection thread: Brass
Nominal pressure	1 bar max.
Cabinet	Polycarbonate, IP67
Temperature of medium	80°C / 100°C max.
Float	Hard PU
Connection	M12 series IP67 - male connector
Operating voltage	12V ... 30V DC
Level contacts	bistable make/break optional fixed or adjustable
Display	LED 3-digit -10 - 100°C (°F)
Switching current	Datasheet IN - GB - 003
Working resistance	RB = U-12V / 20mA
Measuring range	4-20 mA = 0 - 100°C
Mounting position	vertical ± 30°

Other temperature ranges on request.

GOLDAMMER
REGELUNGSTECHNIK GMBH
SCHÖLLERSHEIDER STR. 15
P.O.BOX 10 02 17
D-40802 METTMANN
PHONE (49) 2104/12093
FAX (49) 2104/12028
www.Goldammer-Regelungstechnik.com

Indicator - TMA - 2

Level - temperature regulator with bistable level contacts temperature display and outputs 4-20mA
Optional PNP Temperature output

serial No.	Date
IND-GB- 92	03/18

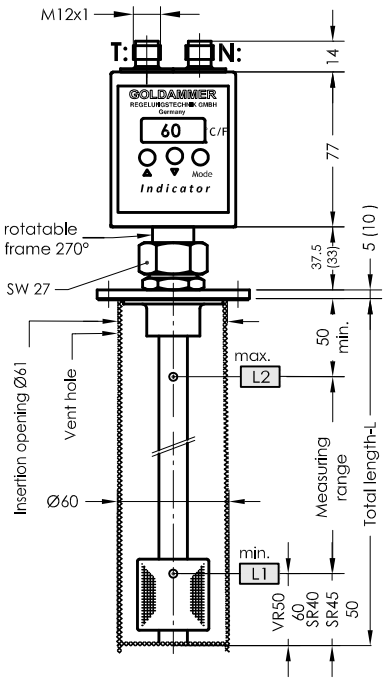

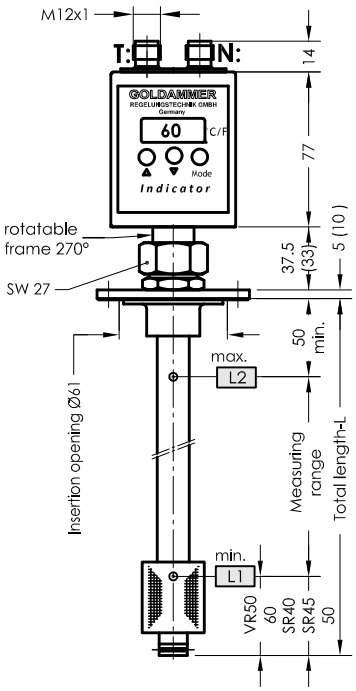

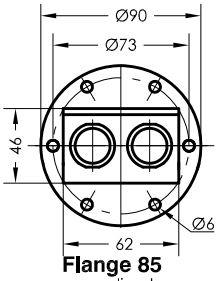

Flange 85
according to DIN24557 part 2

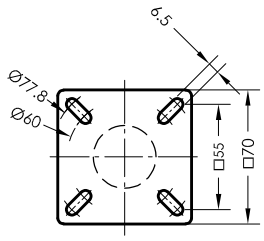

Flange 70
Insertion opening Ø41

Pin assignment

Level contact -03-

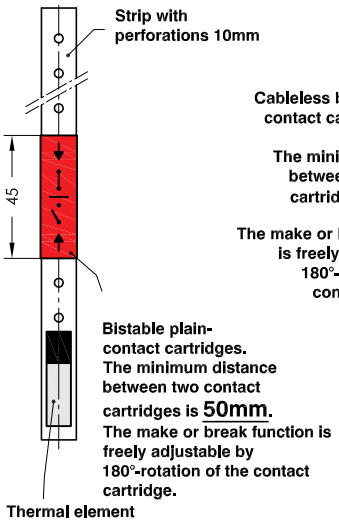

Level contact -OK-

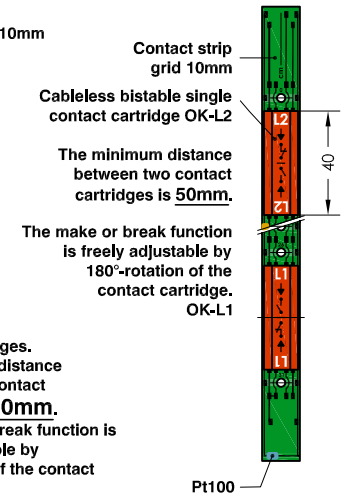

Plug securing

N: 1 = Input L1 - L3
4 = L1
2 = L2
5 = L3

T: 1 = +12-30V DC
2 = Temperature 4 - 20mA
3 = GND - Indication
4 = Temperature T1 PNP (TF)
5 = Temperature T2 PNP
6 = Temperature T3 PNP
PNP Output freely programmable

Order code

Specimen order

NR85-S-TMA-2-SR45-L250-01-L1/200/S-2M12-MS-TF70Ö

Tank connection:
NR 70 - L max. 2000mm
NR 85 - L max. 2000mm

O = without protective tube
S = with protective tube

Float type
SR40
SR45
VR50

Total length-L switching tube (mm)

Level contact type
OK = cordless contact max. L = 500
01 = fixed, plain (L1-L3 max.)
03 = adjustable, plain (L1-L3 max.)

Execution
MS = Brass
VA = Flange, Protective tube Switch tube and float stainless steel

Thermal contact
TF10Ö
TF40Ö
TF50Ö
TF60Ö (S)
TF70Ö (S)
TF80Ö (S)
TF90Ö
(Ö preffered)

Technical data

Description

The Indicator TMA -2 for tank insert is a solenoid switch operating without contact with the function of monitoring and regulating liquid levels and temperatures. The switching tube contains bistable protective gas contacts. They may be fixed or alternatively mounted as an adjustable contact cartridge on a perforated strip. For fixed contacts, the contact intervals and their functions must be given. Plain contact cartridges can be subsequently adjusted for height. The function of make or break can then be altered by turning the cartridge through 180° degrees.
The permanent magnet built into the float switches the contacts when the level changes. The switching difference (hysteresis) is 4 mm. For temperature monitoring, the temperature dependent signal emitted from a Pt100 resistor mounted in the contact tube is converted with the installed transducer into a temperature linear current change of 4-20mA. The level controller is maintenance-free when nondeposit media are used.
For inductive loads, a protective circuit must be provided (free-wheeling diode/RC element). The temperature indication is by means of an electronic circuit with an LED display that indicates the actual temperature, optionally in °C or °F.
The device must only be installed by specialists.
Other temperature ranges on request.

Max. Viscosity ISO VG 100 / VG 320

Technical data

Protective tube	Stainless steel
Switch tube	Brass, stainless steel
Tank connection:	Polyamid or stainless steel with flat seal
Nominal pressure	1 bar max. Float. - Hard PU SR40/SR45 10 bar max. Float VR50 stainless steel
Cabinet	Polycarbonate, IP67
Temperature of medium	100°C max.
Connection	M12 series IP67 - male connector
Operating voltage	12V ... 30V DC
Level contacts	bistable make/break optional fixed or adjustable
Display	LED 3-digit -10 - 100°C (°F)
Switching current	Datasheet IN - GB - 003
Working resistance	RB = U-12V / 20mA
Measuring range	4-20 mA = 0-100°C
Mounting position	vertical ± 30°

GOLDAMMER
REGELUNGSTECHNIK GMBH
SCHÖLLERSHEIDER STR. 15
P.O.BOX 10 02 17
D-40802 METTMANN
PHONE (49) 2104/12093
FAX (49) 2104/12028
www.Goldammer-Regelungstechnik.com

Indicator - TMA - 2 - 150°C max

Level-temperature controller with bistable level contacts,
Temperature display and outputs 4-20mA
Optional PNP Temperature output

serial No.	Date
IND-GB- 92a	03/18

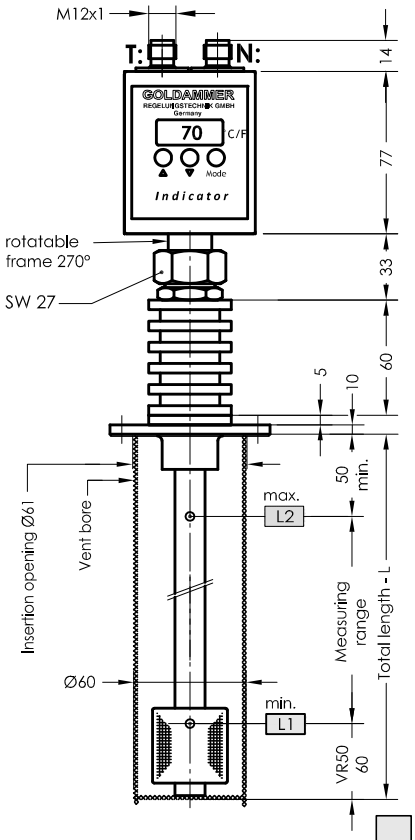

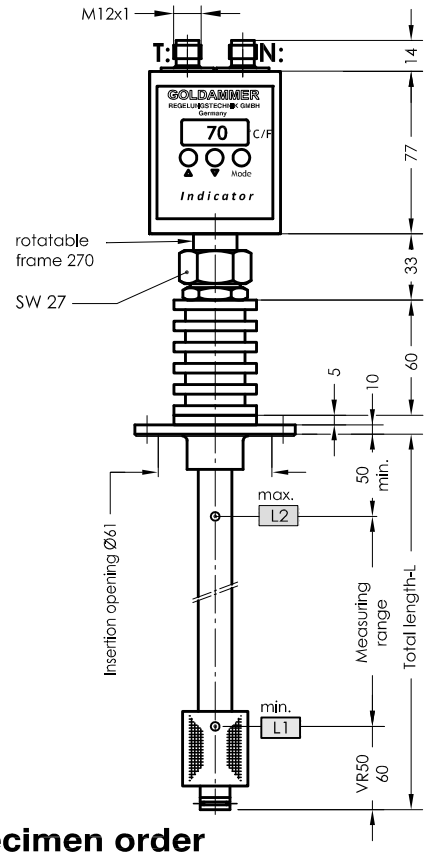

Pin assignment

Plug securing

N: 1 = Input L1 - L3
4 = L1
2 = L2
5 = L3

T: 1 = +12-30V DC
2 = Temperature 4 - 20mA
3 = GND - Indication
4 = Temperature T1 PNP (TF)
5 = Temperature T2 PNP
6 = Temperature T3 PNP
PNP Output freely programmable

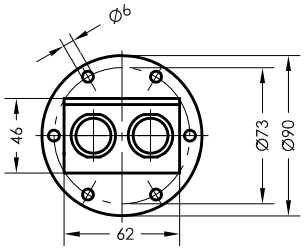

Flange 85
according to DIN24557 part 2

Order code

Specimen order

NR85-O-TMA-2-VR50-L210-02-L1/150/S-2M12-VA-T2-4-20mA-150°C

Tank connector
NR85-L max. 2000mm

O = without Protective tube
S = with Protective tube

Float type
VR50

Total length-L
switching tube (mm)

Level contact type
02 = fixed, plain

Switching point L1-L2/
mm from sealing edge
Ö = break
S = make
Function with increasing level

Execution
VA = Flange, Switch tube
Protective tube and float
stainless steel

Temperature output
T1
T2
T3

Technical data

Description

The level - controller type Indicator-TMA-150°C max is a contactless - operating magnetic switch and is used for continuous monitoring and control of liquids and temperatures. The switching tube contains bistable protective gas contacts. For contacts, the contact intervals and their functions must be given. The permanent magnet fitted in the float switches the contact when the level changes. The switching difference (hysterese) is 4 mm.
For temperature monitoring, the temperature dependent signal emitted from a Pt100 resistor mounted in the contact tube is converted with the installed transducer into a temperature linear current change of 4-20mA.
The level controller is maintenance free in the absence of media that cause encrustation.
A protective circuit is to be provided for inductive consumers (free-wheeling diode/RC element). Temperature monitoring and control is by means of an electronic circuit with an LED display that indicates the actual values, optionally in °C or °F.
The temperature switching points are adjusted by means of three buttons fitted on the control unit.
The level controller is maintenance-free when nondeposit media are used.
The circulation of air of cooling fins must be ensured.
The device must only be installed by specialists. Max. Viscosity ISO VG 320

Technical data

Protective tube	Stainless steel
Switch tube	Stainless steel
Tank connection	Stainless steel with flat seal Viton
Nominal pressure	1 bar max.
Cabinet	Polycarbonate, IP67
Temperature of medium	150°C max.
Float	VR50 stainless steel
Connection	M12 IP67 series - male connector
Operating voltage	12V - 30V DC
Level contacts	max. 2 fixed contacts bistable make/break
Measuring range	4-20 mA = 0 - 160°C
Display	LED 3-digit -10 - 160°C(°F)
Switching current	Datasheet IN - GB - 004
Mounting position	vertical ± 30°
*Indicator	Sheet IND-GB

GOLDAMMER
REGELUNGSTECHNIK GMBH
SCHÖLLERSHEIDER STR. 15
P.O.BOX 10 02 17
D-40802 METTMANN
PHONE (49) 2104/12093
FAX (49) 2104/12028
www.Goldammer-Regelungstechnik.com

Indicator - TMA - 2 - R (remote installation)

Level - temperature regulator with bistable level contacts
temperature display and outputs 4-20mA
Optional PNP Temperature output

serial No.	Date
IND-GB- 93	03/18

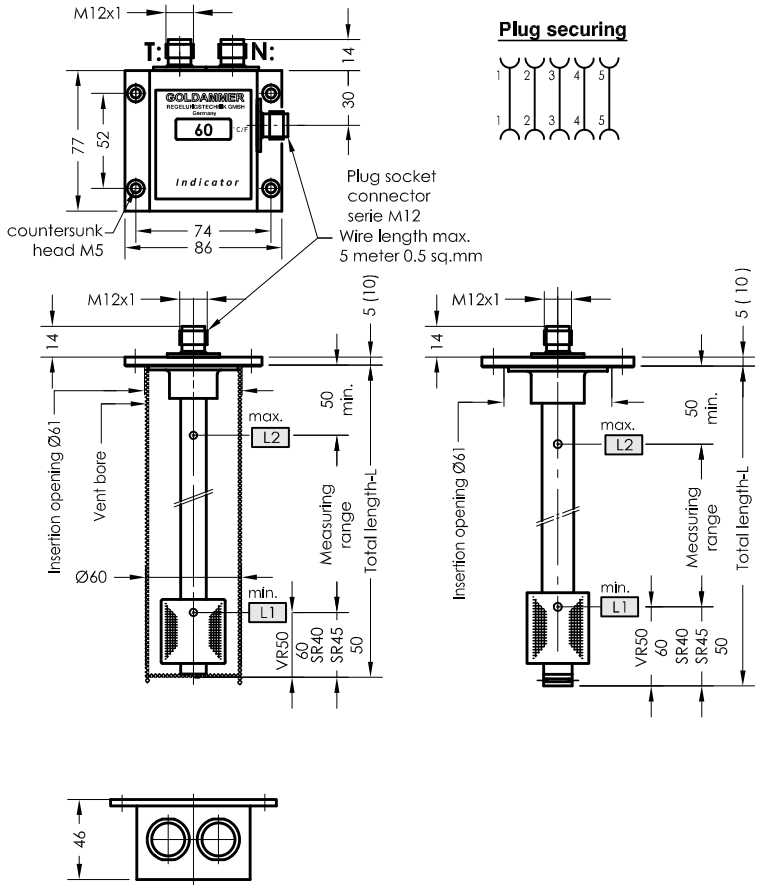

Pin assignment

Level contact
-03-

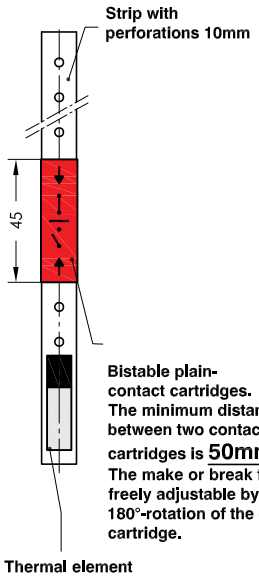

Level contact
-OK-

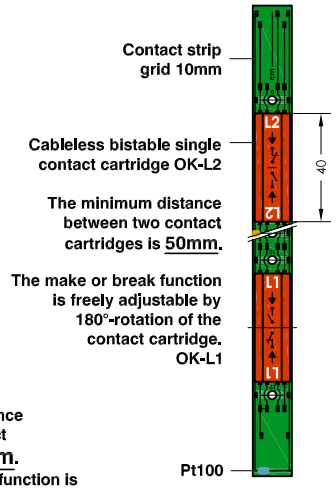

Plug securing

N: 1 = Input L1 - L3
4 = L1
2 = L2
5 = L3

T: 1 = +12-30V DC
2 = Temperature 4 - 20mA
3 = GND - Indication
4 = Temperature T1 PNP (TF)
5 = Temperature T2 PNP
6 = Temperature T3 PNP
PNP Output freely programmable

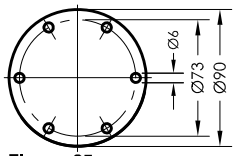

Flange 85
according to DIN24557 part 2

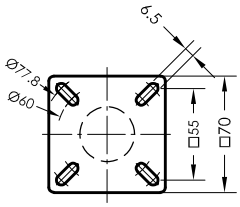

Flange 70
Insertion opening Ø41

Order code

Specimen order

NR85-S-TMA-2-R-SR45-L250-01-L1/200/S-4M12-MS-TF70Ö

Tank connection:
NR70 - L max. 2000mm
NR85-L max. 2000mm

O = without protective tube
S = with protective tube

Float type
SR40
SR45
VR50

Level contact type
OK = cordless contact max. L = 500
01 = fixed, plain (L1-L3 max.)
03 = adjustable, plain (L1-L3 max.)

Total length-L
switching tube (mm)

Execution
MS = Brass
VA = Flange, Protective tube, Switch tube and float stainless steel

Thermal contact
TF10Ö
TF40Ö
TF50Ö
TF60Ö (S)
TF70Ö (S)
TF80Ö (S)
TF90Ö
(Ö preferred)

Equipment

Art. Nr. 50100080 - connecting wire circuit serie M12 with 2 cable sockets 5-pole length 3m
Art. Nr. 50100079 - connecting wire circuit serie M12 with 2 cable sockets 8-pole length 3m
Art. Nr. 50100076 - connecting wire circuit serie M12 with 2 cable sockets 5-pole length 5m
Art. Nr. 50100077 - connecting wire circuit serie M12 with 2 cable sockets 8-pole length 5m
Other length available on request

Technical data

Description

The Indicator TMA -2-R (remote installation) for tank insert is a solenoid switch operating without contact with the function of monitoring and regulating liquid levels and temperatures. The switching tube contains bistable protective gas contacts. They may be fixed or alternatively mounted as an adjustable contact cartridge on a perforated strip. For fixed contacts, the contact intervals and their functions must be given. Plain contact cartridges can be subsequently adjusted for height. The function of make or break can then be altered by turning the cartridge through 180° degrees. The permanent magnet built into the float switches the contacts when the level changes. The switching difference (hysteresis) is 4 mm. For temperature monitoring, the temperature dependent signal emitted from a Pt100 resistor mounted in the contact tube is converted with the installed transducer into a temperature linear current change of 4-20mA. The level controller is maintenance-free when nondeposit media are used. For remote installation, a low-loss connection between the display unit and sensor tube must be provided.
For inductive loads, a protective circuit must be provided (free-wheeling diode/RC element). The temperature indication is by means of an electronic circuit with an LED display that indicates the actual temperature, optionally in °C or °F.
The device must only be installed by specialists.
Other temperature ranges on request. **Max. Viscosity ISO VG 320**

Technical data

Protective tube	Stainless steel
Switch tube	Brass, stainless steel
Tank connection:	Polyamid or Stainless steel with flat seal
Nominal pressure	1 bar max. Float Hard PU SR40/SR45 10 bar max. Float VR 50 Stainless steel
Cabinet	Polycarbonate, IP67
Temperature of medium	100°C max.
Connection	M12 IP67 series - male connector
Operating voltage	12V - 30V DC
Level contacts	bistable make/break - 3 max. optional fixed or adjustable
Display	LED 3-digit -10 - 100°C (°F)
Switching current	Datasheet IN - GB - 003
Working resistance	RB = U-12V / 20mA
Measuring range	4-20 mA = 0 - 100°C
Mounting position	vertical ± 30°

GOLDAMMER
REGELUNGSTECHNIK GMBH
SCHÖLLERSHEIDER STR. 15
P.O.BOX 10 02 17
D-40802 METTMANN
PHONE (49) 2104/12093
FAX (49) 2104/12028
www.Goldammer-Regelungstechnik.com

Indicator - NT - 1

Level - temperature regulator with bistable level contacts and PNP temperature switching outputs with temperature display

serial No. Date
IND - GB - 100 03/18

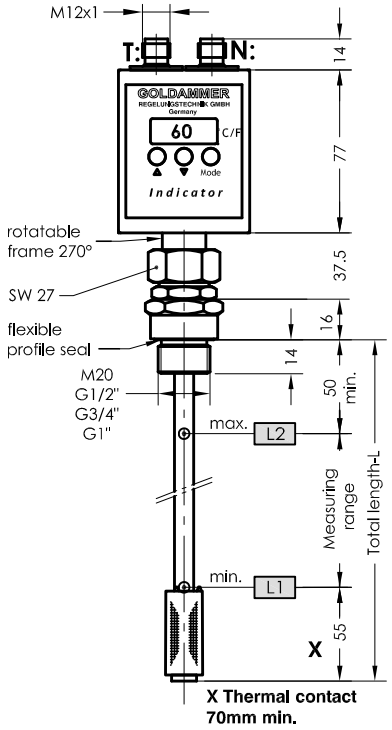

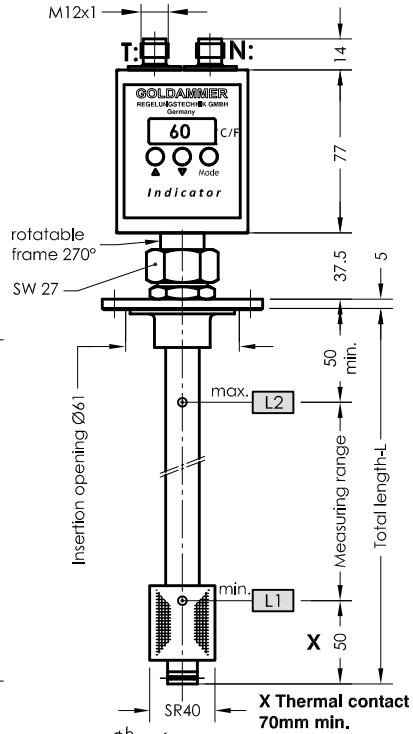

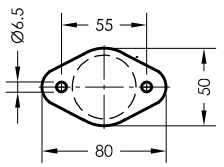

Flange 50
Insertion opening Ø41

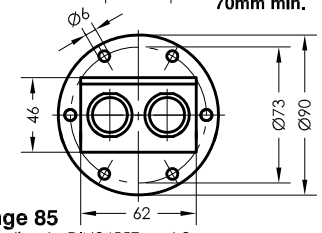

Flange 85
according to DIN24557 part 2

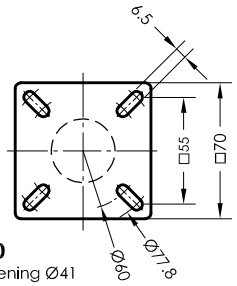

Flange 70
Insertion opening Ø41

Pin assignment

Level contact

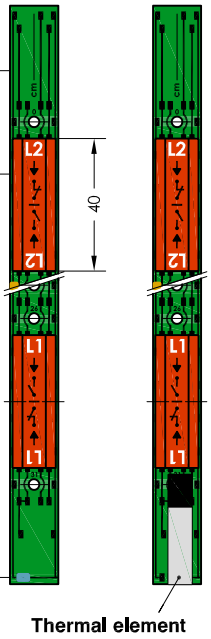

Plug securing

N: 1 = Input L1 - L3
4 = L1
2 = L2
5 = L3

T: 1 = +12V-30V DC
3 = GND - Indication
4 = Temperatur T1 PNP
2 = Temperatur T2 PNP (TF)
5 = Temperatur T3 PNP (TF)
6 = Fixed contact TF
PNP Output freely programmable

02 Changeover

1 = input
2 = Ö
4 = S

Order code

Specimen order

NR85-NT-1-SR40-L250-01/T3-L1/200/S-L2/50/S-2M12-TF70Ö

Tank connection:
M20 - SB17
G1/2" - SB17
G3/4" - SR23
G1" - SR30 L
NR50 - SR40
NR70 - SR40
NR85 - SR40

Float type
SB17
SR23
SR30
SR40

Total length-L switching tube (mm)
standard length
L=250
L=370
L=500
L=800

Level contact type
01 = fixed, plain (L1-L3 max.)
02 = fixed changeover
OK = cableless contacts (L1+L2 max., max. 500mm)

Temperature-output
T1
T2
T3

M20, NR G1/2", G3/4" for level contact type 01 only

Thermal contact
TF10Ö
TF40Ö
TF50Ö
TF60Ö (S)
TF70Ö (S)
TF80Ö (S)
TF90Ö
(Ö preferred)

Technical data

Description

The Indicator NT-1 for tank insert is a solenoid switch operating without contact with the function of monitoring and regulating liquid levels and temperatures.
The switching tube contains bistable protective gas contacts. They may be fixed or alternatively mounted as cordless adjustable cartridge. For fixed contacts, the contact intervals and their functions must be given. Plain contact cartridges can be subsequently adjusted for height. The function of make or break can then be altered by turning the cartridge through 180° degrees.
The permanent magnet fitted in the float switches the contact when the level changes. The switching difference (hysterese) is 4 mm.
Temperature monitoring and control is by means of an electronic circuit with an LED display that indicates the actual values, optionally in °C or °F.
The temperature switching point is adjusted by means of three buttons fitted on the control unit.
Optionally, a hard contact can be installed as security switching.
The level controller is maintenance-free when nondeposit media are used. For inductive loads, a protective circuit must be provided (free-wheeling diode/RC element).

The device must only be installed by specialists.

Other temperature ranges on request.

Technical data

Switch tube	Brass L = 800mm max.
Tank connection:	Polyamid with flat seal Connection thread: Brass
Nominal pressure	1 bar max.
Cabinet	Polycarbonate, IP67
Temperature of medium	100°C max.
Float	Hard PU
Connection	M12 IP67 series - male connector
Operating voltage	12V ... 30V DC
Level contacts	bistable make/break/ changeover optional fixed or adjustable
Switching current	Datasheet IN - GB - 003(004)
Display	LED 3-digit -10 - 100°C (°F)
Mounting position	vertical ± 30°
*Thermal contact	Sheet TR-GB-507
*Indicator	Sheet IND-GB

GOLDAMMER
REGELUNGSTECHNIK GMBH
SCHÖLLERSHEIDER STR. 15 PHONE (49) 2104/12093
P.O.BOX 10 02 17 FAX (49) 2104/12028
D-40802 METTMANN www.Goldammer-Regelungstechnik.com

Indicator - NT - 1 - R (remote installation)

Level - temperature controller with bistable level contacts and PNP temperature switching outputs with temperature display

serial No.	Date
IND-GB- 101	03/18

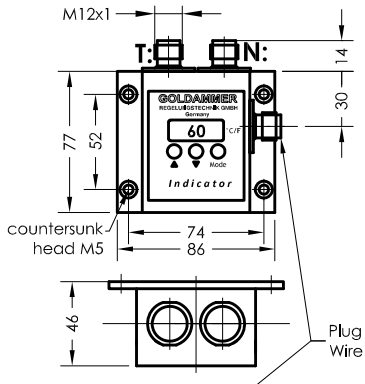

Plug socket connector serie M12
Wire length max. 5 meter 0.5 sq.mm

Plug securing

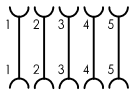

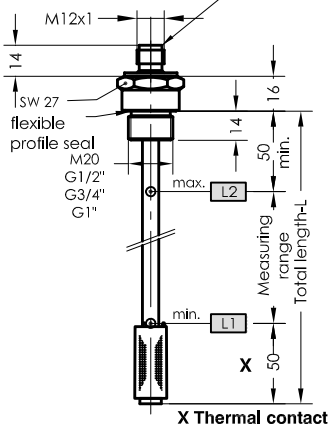

X Thermal contact 70mm min.

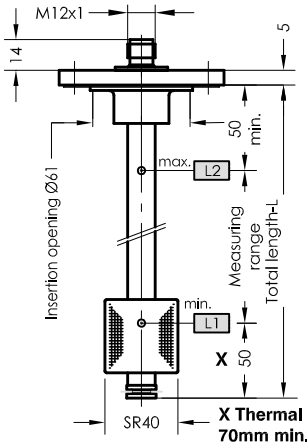

X Thermal contact 70mm min.

Pin assignment

Level contact

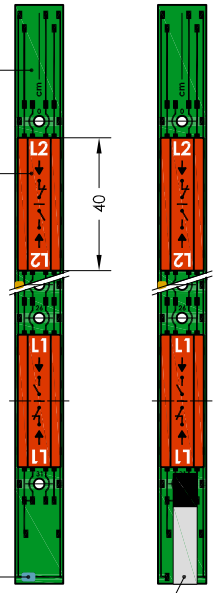

Contact strip grid 10mm

Cableless bistable single contact cartridge OK-L2

The minimum distance between two contact cartridges is 50mm.

The make or break function is freely adjustable by 180°-rotation of the contact cartridge. OK-L1

Plug securing

N: 1 = Input L1 - L3
4 = L1
2 = L2
5 = L3

T: 1 = +12V-30V DC
3 = GND - Indication
4 = Temperatur T1 PNP
2 = Temperatur T2 PNP (TF)
5 = Temperatur T3 PNP (TF)
6 = Fixed contact TF
PNP Output freely programmable

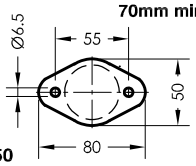

Flange 50
Insertion opening Ø41

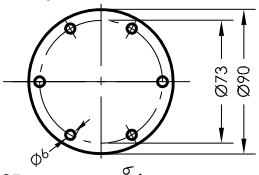

Flange 85
according to DIN24557 part 2

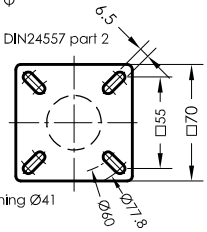

Flange 70
Insertion opening Ø41

Order code

Specimen order

NR85-NT-1-R-SR40-L250-01/T3-L1/200/S-L2/50/S-4M12-TF70Ö

Tank connection:
M20 - SB17
G1/2" - SB17
G3/4" - SR23
G1" - SR30
NR50 - SR40
NR70 - SR40
NR85 - SR40

Float type
SB17
SR23
SR30
SR40

Total length-L switching tube (mm)
standard length
L=250
L=370
L=500
L=800

Level contact type
01 = fixed, plain (L1-L3 max.)
OK = cableless contacts (L1+L2 max., max. 500mm)

M20, NR G1/2", G3/4" for level contact type 01 only

Temperature output
T1
T2
T3

Thermal contact
TF10Ö
TF40Ö
TF50Ö
TF60Ö (S)
TF70Ö (S)
TF80Ö (S)
TF90Ö
(Ö preferred)

Equipment

Art. Nr. 50100080 - connecting wire circuit serie M12 with 2 cable sockets 5-pole length 3m
Art. Nr. 50100079 - connecting wire circuit serie M12 with 2 cable sockets 8-pole length 3m
Art. Nr. 50100076 - connecting wire circuit serie M12 with 2 cable sockets 5-pole length 5m
Art. Nr. 50100077 - connecting wire circuit serie M12 with 2 cable sockets 8-pole length 5m
Other length available on request

Technical data

Description

The Indicator NT-1-R (remote installation) for tank insert is a solenoid switch operating without contact with the function of monitoring and regulating liquid levels and temperatures.
The switching tube contains bistable protective gas contacts. They may be fixed or alternatively mounted as an adjustable cordless contact cartridge. For fixed contacts, the contact intervals and their functions must be given. Plain contact cartridges can be subsequently adjusted for height. The function of make or break can then be altered by turning the cartridge through 180° degrees.

The permanent magnet fitted in the float switches the contact when the level changes. The switching difference (hysterese) is 4 mm.
Temperature monitoring and control is by means of an electronic circuit with an LED display that indicates the actual values, optionally in °C or °F.
The temperature switching point can be adjusted by means of the buttons fitted on the control unit.
Optionally, a hard contact can be installed as security switching.
The level controller is maintenance-free when nondeposit media are used. For inductive loads, a protective circuit must be provided (free-wheeling diode/RC element).The device must only be installed by specialists.

Technical data

Switch tube	Brass L =800mm max.
Tank connection:	Polyamid with flat seal Connection thread: Brass
Nominal pressure	1 bar max.
Cabinet	Polycarbonate, IP67
Temperature of medium	100°C max.
Float	Hard PU
Connection	M12 IP67 series - male connector
Operating voltage	12V ... 30V DC
Level contacts	bistable make/break optional fixed or adjustable
Switching current	Datasheet IN - GB - 003
Display	LED 3-digit -10 - 100°C (°F)
Mounting position	vertical ± 30°
*Thermal contact	Sheet TR-GB-507
*Indicator	Sheet IND-GB

Other temperature ranges on request.

GOLDAMMER
REGELUNGSTECHNIK GMBH
SCHÖLLERSHEIDER STR. 15
P.O.BOX 10 02 17
D-40802 METTMANN
PHONE (49) 2104/12093
FAX (49) 2104/12028
www.Goldammer-Regelungstechnik.com

Indicator - NT - 2

Level - temperature controller with bistable level contacts and PNP temperature switching outputs with temperature display

serial No.	Date
IND-GB- 102	03/18

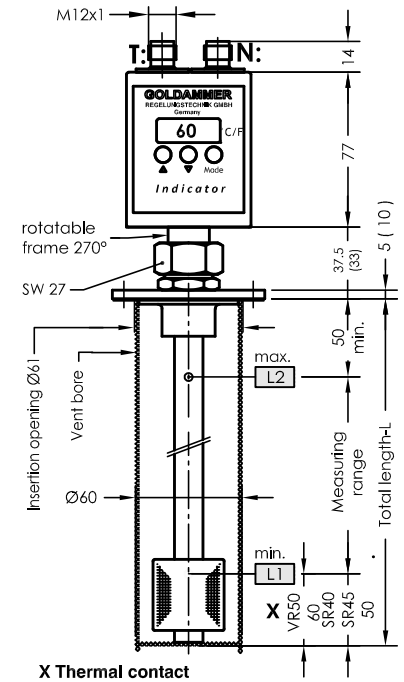

X Thermal contact 80mm min.

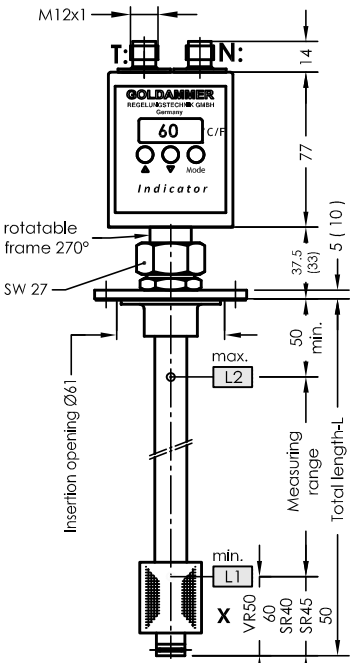

X Thermal contact 70mm min.

Pin assignment

Level contact -03-

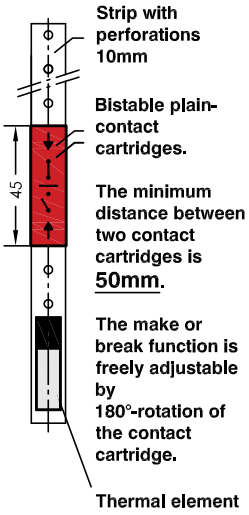

Level contact -OK-

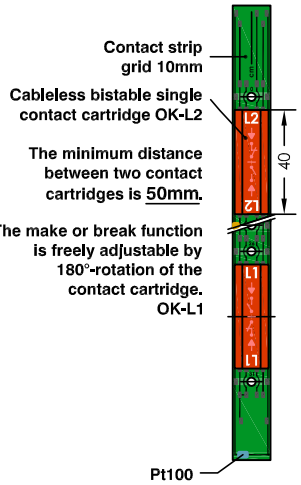

Plug securing

N: 1 = Eingang L1 - L3
4 = L1
2 = L2
5 = L3

T: 1 = +12V-30V DC
3 = GND - Indication
4 = Temperatur T1 PNP
2 = Temperatur T2 PNP (TF)
5 = Temperatur T3 PNP (TF)
6 = Fixed contact TF
PNP Output freely programmable

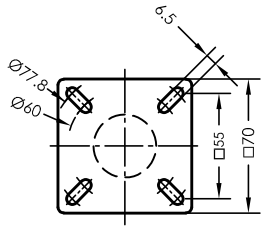

Flange 70
Insertion opening Ø41

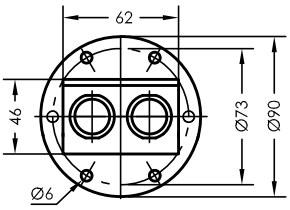

Flange 85
according to DIN24557 part 2

Order code

Specimen order

NR85-S-NT-2-SR45-L250-01/T3-L1/200/S-L2/50/S-2M12-MS-TF70Ö

Tank connection:
NR70 - L max. 2000mm
NR85 - L max. 2000mm

O = without protective tube
S = with protective tube

Float type
SR40
SR45
VR50

Total length-L switching tube (mm)

Level contact type
OK = cordless contact max. L = 500
01 = fixed, plain (L1-L3 max.)
03 = adjustable, plain (L1-L3 max.)

Temperature output
T1
T2
T3

Execution
MS = Brass
VA = Flange, Switch tube, Protective tube and float stainless steel

Thermal contact
TF10Ö
TF40Ö
TF50Ö
TF60Ö (S)
TF70Ö (S)
TF80Ö (S)
TF90Ö
(Ö preferred)

Technical data

Description

The Indicator NT-2 for tank insert is a solenoid switch operating without contact with the function of monitoring and regulating liquid levels and temperatures.
The switching tube contains bistable protective gas contacts. They may be fixed or alternatively mounted as an adjustable contact cartridge on a perforated strip. For fixed contacts, the contact intervals and their functions must be given. Plain contact cartridges can be subsequently adjusted for height. The function of make or break can then be altered by turning the cartridge through 180° degrees.
The permanent magnet fitted in the float switches the contact when the level changes. The switching difference (hysterese) is 4 mm.
Temperature monitoring and control is by means of an electronic circuit with an LED display that indicates the actual values, optionally in °C or °F.
The temperature switching point is adjusted by means of three buttons fitted on the control unit.
Optionally, a hard contact can be installed as security switching.
The level controller is maintenance free provided there are no media that cause encrustation.
The device must only be installed by specialists.
Other temperature ranges on request.

Technical data

Protective tube	Stainless steel
Switch tube	Brass, stainless steel. L max 2000mm
Tank connection:	Polyamid or stainless steel with flat seal
Nominal pressure	1 bar max. Float Hard PU SR40/SR 45 10 bar max. Float stainless steel VR50
Cabinet	Polycarbonate, IP67
Temperature of medium	100°C max.
Connection	M12 series IP67 - male connector
Operating voltage	12V ... 30V DC
Level contacts	bistable make/break optional fixed or adjustable
Switching current	Datasheet IN - GB - 003
Display	LED 3-digit -10 - 100°C (°F)
Mounting position	Vertical ± 30°
*Thermal contact	Sheet TR-GB-507
*Indicator	Sheet IND-GB

GOLDAMMER
REGELUNGSTECHNIK GMBH
SCHÖLLERSHEIDER STR. 15 PHONE (49) 2104/12093
P.O.BOX 10 02 17 FAX (49) 2104/12028
D-40802 METTMANN www.Goldammer-Regelungstechnik.com

Indicator - NT - 2 - R (remote installation)

Level - temperature controller with bistable level contacts and PNP temperature switching outputs with temperature display

serial No.	Date
IND-GB- 103	03/18

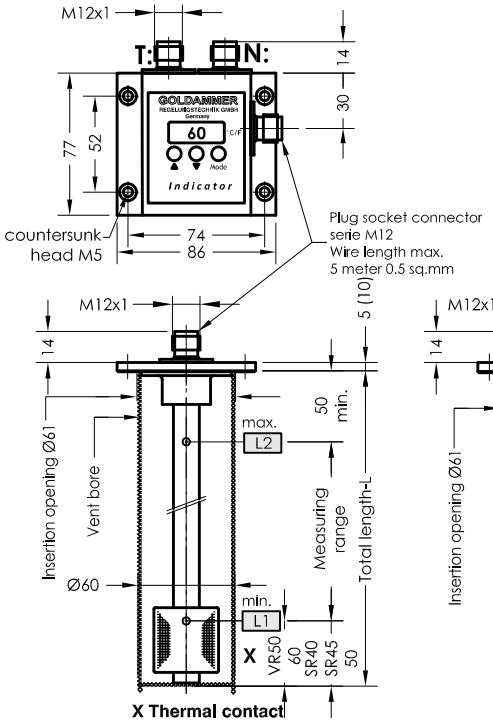

Plug securing

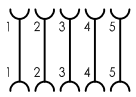

Pin assignment

Level contact -03-

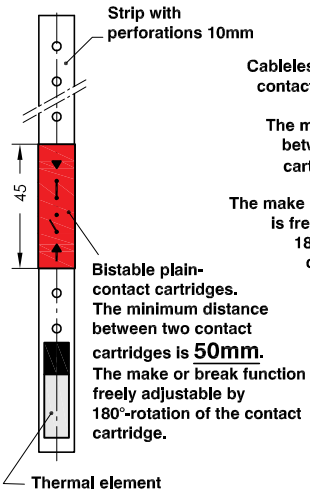

Level contact -OK-

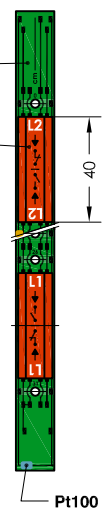

Plug securing

N: 1 = Input L1 - L3
4 = L1
2 = L2
5 = L3

T: 1 = +12V-30V DC
3 = GND - Indication
4 = Temperatur T1 PNP
2 = Temperatur T2 PNP (TF)
5 = Temperatur T3 PNP (TF)
6 = Fixed contact TF
PNP Output freely programmable

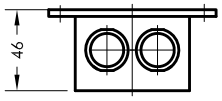

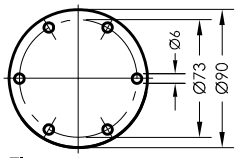

Flange 85
according to DIN24557 part 2

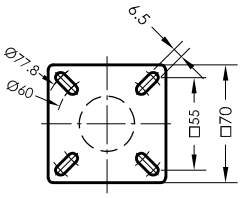

Flange 70
Insertion opening Ø41

Order code

Specimen order

NR85-S-NT-2-R-SR45-L250-01/T3-L1/200/S-L2/50/S-4M12-MS-TF70Ö

Tank connection:
NR70 - L max. 2000mm
NR85 - L max. 2000mm

O = without protective tube
S = with protective tube

Float type
SR40
SR45
VR50

Total length-L switching tube(mm)

Level contact type
OK = cordless contact max. L = 500
01 = fixed, plain (L1-L3 max.)
03 = adjustable, plain (L1-L3 max.)

Temperature output
T1
T2
T3

Execution
MS = Brass
VA = Flange, Switch tube, Protective tube and float stainless steel

Thermal contact
TF10Ö
TF40Ö
TF50Ö
TF60Ö (S)
TF70Ö (S)
TF80Ö (S)
TF90Ö
(Ö preferred)

Equipment
Art. Nr. 50100080 - connecting wire circuit serie M12 with 2 cable sockets 5-pole length 3m
Art. Nr. 50100079 - connecting wire circuit serie M12 with 2 cable sockets 8-pole length 3m
Art. Nr. 50100076 - connecting wire circuit serie M12 with 2 cable sockets 5-pole length 5m
Art. Nr. 50100077 - connecting wire circuit serie M12 with 2 cable sockets 8-pole length 5m
Other length available on request

Technical data

Description

The Indicator NT-2-R (remote installation) for tank insert is a solenoid switch operating without contact with the function of monitoring and regulating liquid levels and temperatures.
The switching tube contains bistable protective gas contacts. They may be fixed or alternatively mounted as an adjustable contact cartridge on a perforated strip. For fixed contacts, the contact intervals and their functions must be given. Plain contact cartridges can be subsequently adjusted for height. The function of make or break can then be altered by turning the cartridge through 180° degrees.
The permanent magnet fitted in the float switches the contact when the level changes. The switching difference (hysterese) is 4 mm.
Temperature monitoring and control is by means of an electronic circuit with an LED display that indicates the actual values, optionally in °C or °F.
The temperature switching point is adjusted by means of 3 buttons fitted on the control unit.
Optionally, a hard contact can be installed as security switching.
The level controller is maintenance free provided there are no media that cause encrustation.
The device must only be installed by specialists.
Other temperature ranges on request.

Technical data

Protective tube	Stainless steel
Switch tube	Brass, stainless steel. L max = 2000mm
Tank connection:	Polyamid or Stainless steel with flat seal
Nominal pressure	1 bar max. - Float Hard PU SR40/SR45 10 bar max. - Float VR50 Stainless steel
Cabinet	Polycarbonate, IP67
Temperature of medium	100°C max.
Float	Hard PU, VR50 stainless steel
Connection	M12 series IP67 - male connector
Operating voltage	12V ... 30V DC
Level contacts	bistable make/break
Switching current	optional fixed or adjustable
Display	Datasheet IN - GB - 003 LED 3-digit -10 - 100°C (°F)
Mounting position	vertical ± 30°
*Thermal contact	Sheet TR-GB-507
*Indicator	Sheet IND-GB

GOLDAMMER
REGELUNGSTECHNIK GMBH
SCHÖLLERSHEIDER STR. 15
P.O.BOX 10 02 17
D-40802 METTMANN
PHONE (49) 2104/12093
FAX (49) 2104/12028
www.Goldammer-Regelungstechnik.com

Indicator - LT-1

Level - temperature controller with PNP level and PNP switching outputs
LED level and temperature display

serial No.	Date
IND-GB- 104	03/18

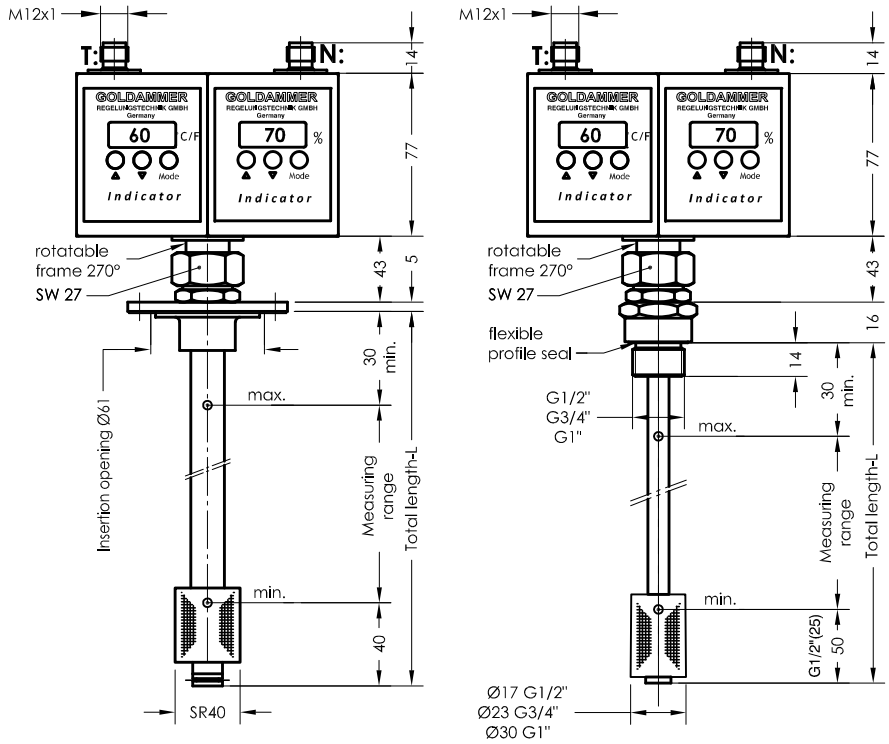

Plug securing

N: 1 = +12V-30V DC
4 = level L1 PNP
2 = level L2 PNP
5 = level L3 PNP
3 = GND - Indication

T: 1 = +12V-30V DC
3 = GND - Indication
4 = Temperatur T1 PNP
2 = Temperatur T2 PNP (TF)
5 = Temperatur T3 PNP (TF)
6 = Fixed condact TF
PNP Output freely programmable

Pin assignment

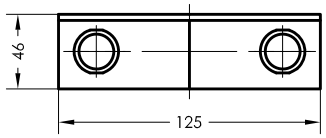

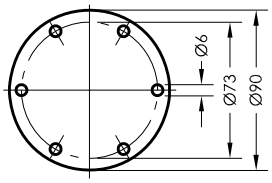

Flange 85
according to DIN24557 part 2

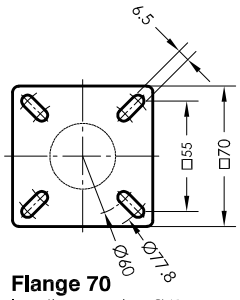

Flange 70
Insertion opening Ø41

Order code

Specimen order

NR85-LT-1-SR40-L250-T3-L3-4M12-TF70Ö

Tank connection:
G1/2" - SR17 L max. 370mm
G3/4" - SR23 L max. 370mm
G1" - SR30 L max. 1000mm
NR70 - SR40 L max. 2000mm
NR85 - SR40 L max. 2000mm

Float type
SR17
SR23
SR30
SR40

Total length-L switching tube (mm)

Temperature output
T1
T2
T3

Level output
L1
L2
L3

Thermal contact
TF10Ö
TF40Ö
TF50Ö
TF60Ö (S)
TF70Ö (S)
TF80Ö (S)
TF90Ö
(Ö preferred)

Technical data

Description

The level - temperature controller type Indicator - LT - 1 is a contactless - operating magnetic switch and is used for continuous monitoring and control of liquids and temperatures.
It contains a resistance measuring chain and a Pt 100 resister.
The level and temperature signals are evaluated by an electronic circuit with an LED display that indicates the actual values.
The level and the temperature switching points are adjusted by means of thee button fitted on the control unit.

The level controller is maintenance free provided there is no media that cause encrustation.

The device must only be installed by specialists.

Other temperature ranges on request.

Technical data

Switch tube	Brass L max. = 1000mm
Tank connection	Polyamid with flat seal Connection thread: Brass
Nominal pressure	1 bar max.
Cabinet	Polycarbonate, IP67
Temperature of medium	100°C max.
Float	Hard PU / NBR
Connection	M12 IP67 series - male connector
Operating voltage	12V ... 30V DC
Level switching points	max. 3 adjustable
Contact grid	5 / 7.5 mm
Display	LED 3-digit -10 bis 100°C (°F) / 0 bis 100%
Temperature switching points	max. 3 adjustable
Probe	Pt100
Switching current	1A max.
Mounting position	vertical ± 30°
*Indicator	Sheet IND-GB

GOLDAMMER
REGELUNGSTECHNIK GMBH
SCHÖLLERSHEIDER STR. 15 PHONE (49) 2104/12093
P.O.BOX 10 02 17 FAX (49) 2104/12028
D-40802 METTMANN www.Goldammer-Regelungstechnik.com

Indicator - LT - 1 - R (remote installation)

Level - temperature controller with PNP level and PNP switching outputs
LED level and temperature display

serial No.	Date
IND-GB- 105	03/18

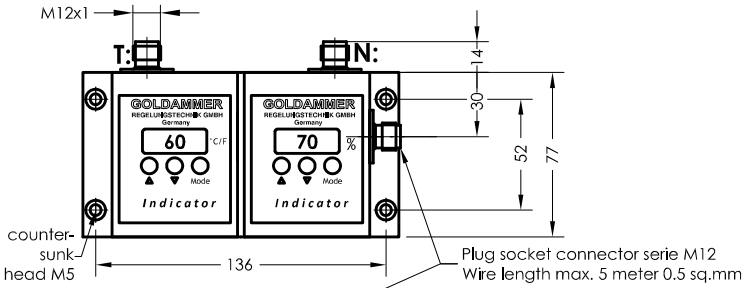

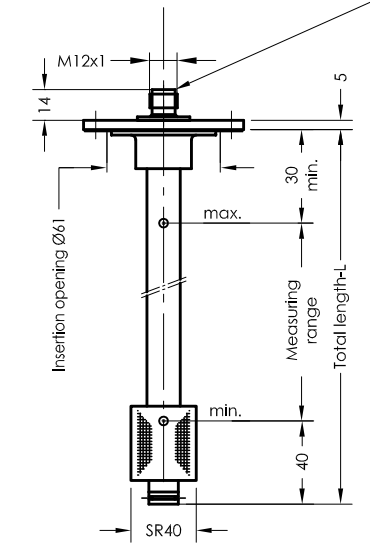

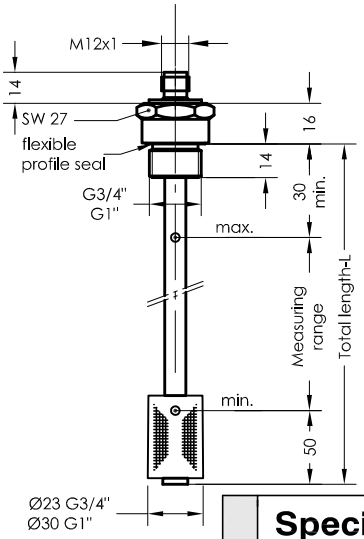

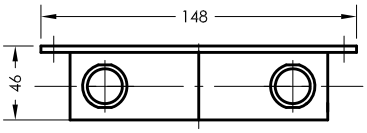

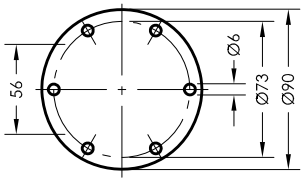

Flange 85
according to DIN24557 part 2

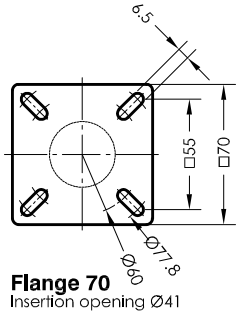

Flange 70
Insertion opening Ø41

Pin assignment

Plug securing

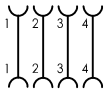

Plug securing

N: 1 = +12V-30V DC
4 = level L1 PNP
2 = level L2 PNP
5 = level L3 PNP
3 = GND - Indication

T: 1 = +12V-30V DC
3 = GND - Indication
4 = temperature T1 PNP
2 = temperature T2 PNP (TF)
5 = temperature T3 PNP (TF)
6 = Fixed contact TF (Fixed contact from G1" possible)

PNP Output freely programmable

Order code

Specimen order

NR85-LT-1-R-SR40-L250-T3-L3-4M12-TF70Ö

Tank connection:
G3/4" - SR23 L max. 370mm
G1" - SR30 L max. 1000mm
NR70 - SR40 L max. 2000mm
NR85 - SR40 L max. 2000mm

Float type
SR23
SR30
SR40

Total length-L switching tube (mm)

Temperature output
T1
T2
T3

Level output
L1
L2
L3

Thermal contact
TF10Ö
TF40Ö
TF50Ö
TF60Ö (S)
TF70Ö (S)
TF80Ö (S)
TF90Ö
(Ö preferred)

Equipment
Art. Nr. 50100080 - connecting wire circuit serie M12 with 2 cable sockets 5-pole length 3
Art. Nr. 50100079 - connecting wire circuit serie M12 with 2 cable sockets 8-pole length 3
Art. Nr. 50100076 - connecting wire circuit serie M12 with 2 cable sockets 5-pole length 5
Art. Nr. 50100077 - connecting wire circuit serie M12 with 2 cable sockets 8-pole length 5
Other length available on request

Technical data

Description

The level - temperature controller type Indicator - LT - 1- R (remote installation) is a contactless - operating magnetic switch and is used for continuous monitoring and control of liquids and temperatures.
It contains a resistance measuring chain and a Pt 100 resister.
The level and temperature signals are evaluated by an electronic circuit with an LED display that indicates the actual values.

The level and temperature switching point is adjusted by means of 3 buttons fitted on the control unit.

The level controller is maintenance free provided there is no media that causes encrustation.

The device must only be installed by specialists.

Other temperature ranges on request.

Technical data

Switch tube	Brass
Tank connection	Polyamid with flat seal Connection thread: Brass
Nominal pressure	1 bar max.
Cabinet	Polycarbonate, IP67
Temperature of medium	100°C max.
Float	Hard PU
Connection	M12 IP67 series - male connector
Operating voltage	12V ... 30V DC
Level contacts	max. 3 adjustable
Contact grid	5 / 7.5 mm
Display	LED 3-digit -10 bis 100°C (°F) / 0 bis 100%
Temperature switching points	max. 3 adjustable
Probe	Pt100
Switching current	1A max.
Mounting position	vertical ± 30°
*Indicator	Sheet IND-GB
*Thermokontakt	Sheet TR-D-507

GOLDAMMER
REGELUNGSTECHNIK GMBH
SCHÖLLERSHEIDER STR. 15 PHONE (49) 2104/12093
P.O.BOX 10 02 17 FAX (49) 2104/12028
D-40802 METTMANN www.Goldammer-Regelungstechnik.com

Indicator - LT-2

Level - temperature controller with PNP level and PNP switching outputs
LED level and temperature display

serial No.	Date
IND-GB- 106	03/18

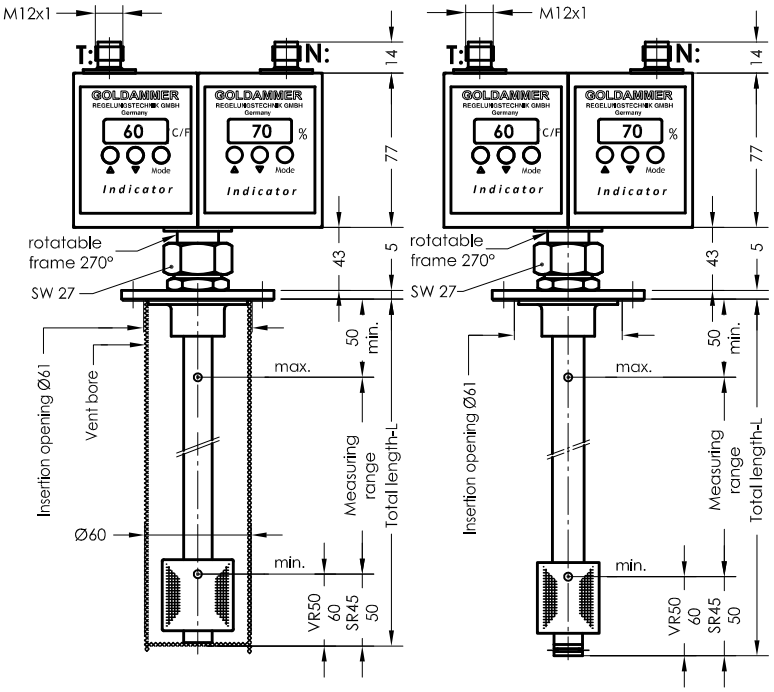

Pin assignment

Plug securing

N: 1 = +12V-30V DC
4 = level L1 PNP
2 = level L2 PNP
5 = level L3 PNP
3 = GND - Indication

T: 1 = +12V-30V DC
3 = GND - Indication
4 = temperature T1 PNP
2 = temperature T2 PNP (TF)
5 = temperature T3 PNP (TF)
6 = Fixed condact TF
PNP Output freely programmable

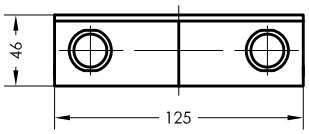

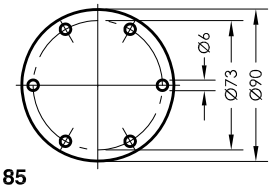

Flange 85
according to DIN24557 part 2

Order code

Specimen order

NR85-S-LT-2-SR45-L250-MS-T3-L3-4M12-TF70Ö

Tank connection:
NR85-L max. 2000mm

O = without protective tube
S = with protective tube

Float type
SR45
VR50

Total length-L
switching tube (mm)

Temperature output
T1
T2
T3

Level output
L1
L2
L3

Execution
MS = Brass
VA = Flange, Protective tube, Switch tube and float stainless steel

Thermal contact
TF10Ö
TF40Ö
TF50Ö
TF60Ö (S)
TF70Ö (S)
TF80Ö (S)
TF90Ö
(Ö preferred)

Technical data

Description

The level - temperature controller type Indicator - LT - 2 is a contactless - operating magnetic switch and is used for continuous monitoring and control of liquids and temperatures.
It contains a resistance measuring chain and a Pt 100 resister.
The level and temperature signals are evaluated by an electronic circuit with an LED display that indicates the actual values.
The level and the temperature switching points are adjusted by means of 3 button fitted on the control unit.

The level controller is maintenance free provided there is no media that cause encrustation.

The device must only be installed by specialists.

Other temperature ranges on request.

Technical data

Protective tube	Stainless steel
Switch tube	Brass, stainless steel
Tank connection:	Polyamid or stainless steel with flat seal
Nominal pressure	1 bar max. / VR50 10 bar max.
Cabinet	Polycarbonate, IP67
Temperature of medium	100°C max.
Float	Hard PU, VR50 stainless steel
Connection	M12 series IP67 - male connector
Operating voltage	12V ... 30V DC
Level contacts	max. 3 adjustable
Contact grid	7.5 mm
Display	LED 3-digit -10 bis 100°C (°F) / 0 bis 100%
Temperature switching points	max. 3 adjustable
Probe	Pt100
Switching current	1A max.
Mounting position	vertical ± 30°
*Indicator	Sheet IND-GB

GOLDAMMER
REGELUNGSTECHNIK GMBH
SCHÖLLERSHEIDER STR. 15 PHONE (49) 2104/12093
P.O.BOX 10 02 17 FAX (49) 2104/12028
D-40802 METTMANN www.Goldammer-Regelungstechnik.com

Indicator - LT - 2 - R (remote installation)

Level - temperature controller with PNP level and PNP switching outputs
LED level and temperature display

serial No.	Date
IND-GB- 107	03/18

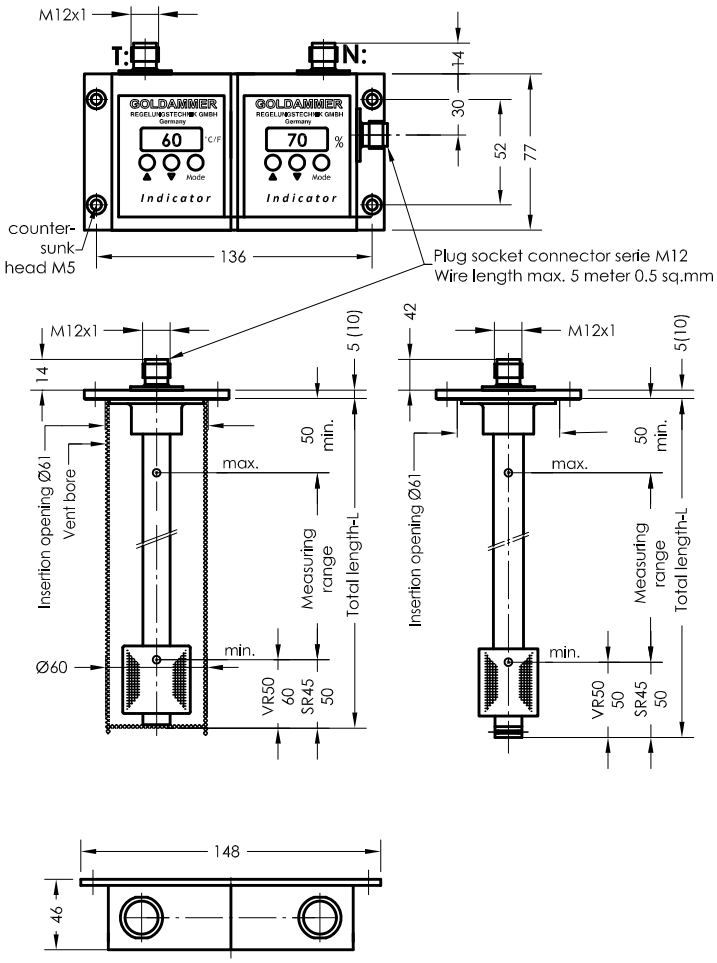

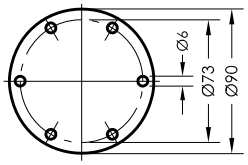

Flange 85
according to DIN24557 part 2

Pin assignment

Plug securing

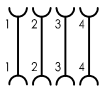

Plug securing

N: 1 = +12V-30V DC
4 = level L1 PNP
2 = level L2 PNP
5 = level L3 PNP
3 = GND - Indication

T: 1 = +12V-30V DC
3 = GND - Indication
4 = Temperatur T1 PNP
2 = Temperatur T2 PNP (TF)
5 = Temperatur T3 PNP (TF)
6 = Fixed contact TF
PNP Output freely programmable

Order code

Specimen order

NR85-S-LT-2-R-SR45-L250-MS-T3-L3-4M12-TF70Ö

Tank connection
NR85 - L max. 2000mm

O = without protective tube
S = with protective tube

Float type
SR45
VR50

Total length-L
switching tube (mm)

Execution
MS = Brass
VA = Flange,
Protective tube,
Switch tube
and float stainless steel

Temperature output
T1
T2
T3

Level output
L1
L2
L3

Thermal contact
TF10Ö
TF40Ö
TF50Ö
TF60Ö (S)
TF70Ö (S)
TF80Ö (S)
TF90Ö
(Ö preferred)

Equipment

Art. Nr. 50100080 - connecting wire circuit serie M12 with 2 cable sockets 5-pole length 3m
Art. Nr. 50100079 - connecting wire circuit serie M12 with 2 cable sockets 8-pole length 3m
Art. Nr. 50100076 - connecting wire circuit serie M12 with 2 cable sockets 5-pole length 5m
Art. Nr. 50100077 - connecting wire circuit serie M12 with 2 cable sockets 8-pole length 5m
Other length available on request

Technical data

Description

The level - temperature controller type Indicator - LT - 2 - R (remote installation) is a contactless - operating magnetic switch and is used for continuous monitoring and control of liquids and temperatures.
It contains a resistance measuring chain and a Pt 100 resister.
The level and temperature signals are evaluated by an electronic circuit with an LED display that indicates the actual values.
The level and the temperature switching points are adjusted by means of three buttons fitted on the control unit.

The level controller is maintenance free provided there is no media that cause encrustation.

The device must only be installed by specialists.

Other temperature ranges on request.

Technical data

Protective tube	Stainless steel
Switch tube	Brass, stainless steel
Tank connection:	Polyamid or stainless steel with flat seal
Nominal pressure	1 bar max. / VR50 10 bar max.
Cabinet	Polycarbonate, IP67
Temperature of medium	100°C max.
Float	Hard PU, VR50 stainless steel
Connection	M12 series IP67 - male connector
Operating voltage	12V ... 30V DC
Level contacts	max. 3 adjustable
Contact grid	7.5 mm
Display	LED 3-digit -10 bis 100°C (°F) / 0 bis 100%
Temperature switching points	max. 3 adjustable
Probe	Pt100
Switching current	1A max.
Mounting position	vertical ± 30°
*Indicator	Sheet IND-GB
*Thermokontakt	Sheet TR-GB-507

GOLDAMMER
REGELUNGSTECHNIK GMBH
SCHÖLLERSHEIDER STR. 15 PHONE (49) 2104/12093
P.O.BOX 10 02 17 FAX (49) 2104/12028
D-40802 METTMANN www.Goldammer-Regelungstechnik.com

Indicator - LT - 2 - R -V (remote installation)

Level - temperature controller with PNP level and PNP switching outputs
LED level and temperature display

serial No.	Date
IND-GB- 107a	03/18

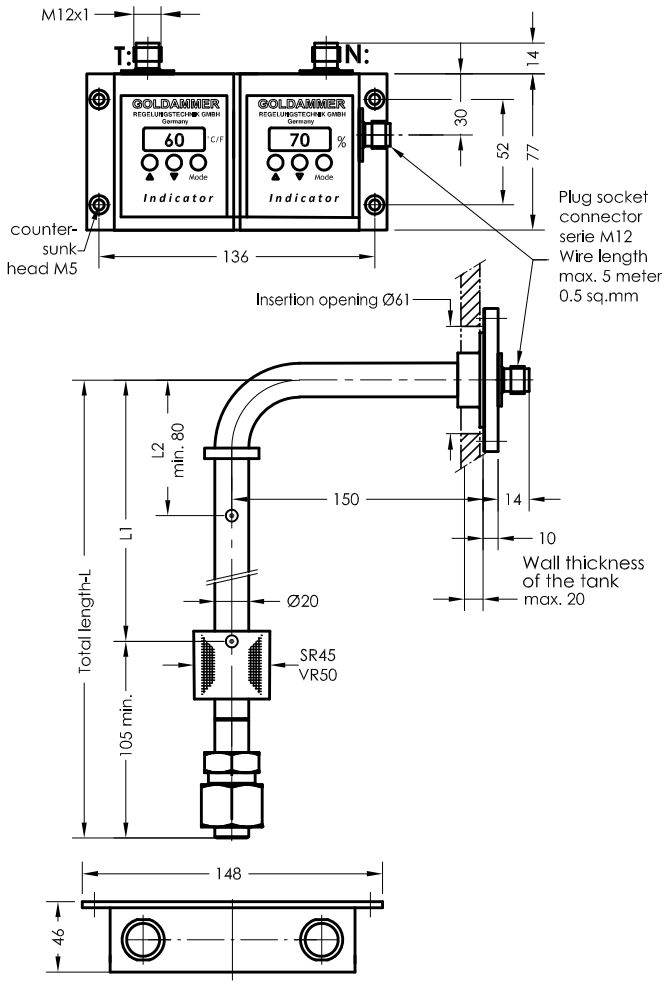

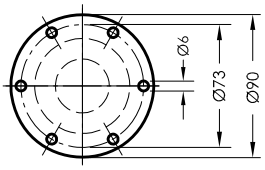

Flange 85
according to DIN24557 part 2

Pin assignment

Plug securing

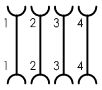

Plug securing

N: 1 = +12V-30V DC
4 = level L1 PNP
2 = level L2 PNP
5 = level L3 PNP
3 = GND - Indication

T: 1 = +12V-30V DC
3 = GND - Indication
4 = Temperatur T1 PNP
2 = Temperatur T2 PNP (TF)
5 = Temperatur T3 PNP (TF)
6 = Fixed contact TF
PNP Output freely programmable

Order code

Specimen order

NR85-V-LT-2-R-SR45-L250-VA-T3-L3-4M12-TF70Ö

- **Tank connection** NR85 - L max. 2000mm
- **Float type** SR45, VR50
- **Total length-L** switching tube (mm)
- **Execution** VA = Flange, Switch tube and float stainless steel
- **Temperature output** T1, T2, T3
- **Level output** L1, L2, L3
- **Thermal contact** TF10Ö, TF40Ö, TF50Ö, TF60Ö (S), TF70Ö (S), TF80Ö (S), TF90Ö (Ö preferred)

Equipment

Art. Nr. 50100080 - connecting wire circuit serie M12 with 2 cable sockets 5-pole length 3m
Art. Nr. 50100079 - connecting wire circuit serie M12 with 2 cable sockets 8-pole length 3m
Art. Nr. 50100076 - connecting wire circuit serie M12 with 2 cable sockets 5-pole length 5m
Art. Nr. 50100077 - connecting wire circuit serie M12 with 2 cable sockets 8-pole length 5m
Other length available on request

Technical data

Description

The level - temperature controller type Indicator LT - 2 - R - V (remote installation) is a contactless - operating magnetic switch and is used for continuous monitoring and control of liquids and temperatures.
It contains a resistance measuring chain and a Pt 100 resister.
The level and temperature signals are evaluated by an electronic circuit with an LED display that indicates the actual values.
The level and the temperature switching points are adjusted by means of three buttons fitted on the control unit.

The level controller is maintenance free provided there is no media that cause encrustation.

The device must only be installed by specialists.

Other temperature ranges on request.

Technical data

Switch tube	Stainless steel
Tank connection	Stainless steel with flat seal
Nominal pressure	1 bar max. / VR50 10 bar max.
Cabinet	Polycarbonate, IP67
Temperature of medium	100°C max.
Float	Hard PU, VR50 stainless steel
Connection	M12 series IP67 - male connector
Operating voltage	12V ... 30V DC
Level contacts	max. 3 adjustable
Contact grid	7.5 mm
Display	LED 3-digit -10 bis 100°C (°F) / 0 bis 100%
Temperature switching points	max. 3 adjustable
Probe	Pt100
Switching current	1A max.
Mounting position	vertical ± 30°
*Indicator	Sheet IND-GB
*Thermokontact	Sheet TR-GB-507

GOLDAMMER
REGELUNGSTECHNIK GMBH
SCHÖLLERSHEIDER STR. 15 PHONE (49) 2104/12093
P.O.BOX 10 02 17 FAX (49) 2104/12028
D-40802 METTMANN www.Goldammer-Regelungstechnik.com

Indicator-MA-1

Level - temperature regulator 4-20 mA with LED display

serial No.	Date
IND-GB- 108	03/18

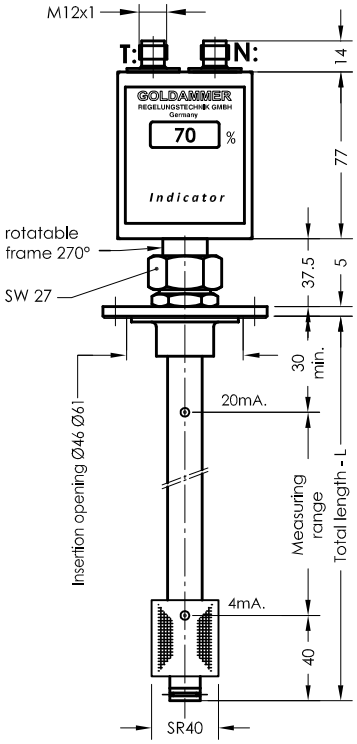

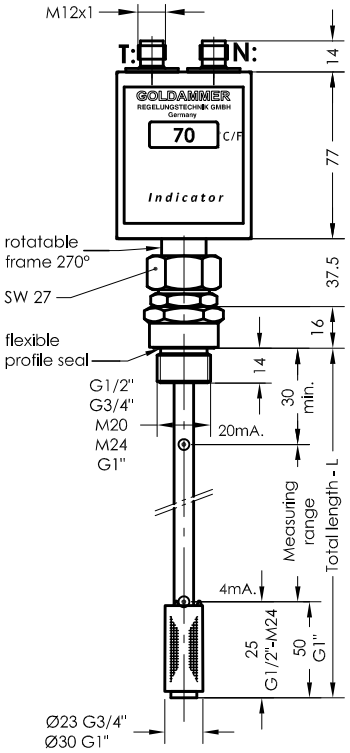

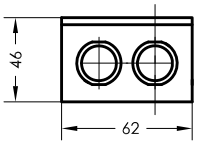

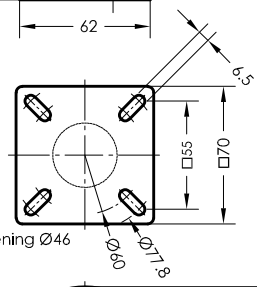

Flange 70
Insertion opening Ø46

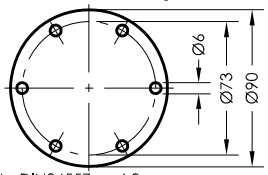

Flange 85
according to DIN24557 part 2

Pin assignment

Plug securing

1 x M12
1 = +12V-30V DC
2 = Temperature 4 - 20mA
3 = GND - Indication
4 = Level 4 - 20mA
5 = Thermal contact TF

1 x M12
1 = +12V-30V DC
4 = Level 4 - 20mA
3 = GND - Indication
5 = Thermal contact TF

2 x M12
T: 1 = +12V-30V DC
2 = Temperature 4 - 20mA
3 = GND - Indication
4 = Fixed contact TF

N: 1 = +12V-30V DC
4 = Level 4 - 20mA

Order code

Specimen order

NR85-MA-1-SR40-T-TA-L370-2M12-TF70Ö

Tank connection:
G1/2" - SR17 L max. 370mm
G3/4" - SR23 L max. 370mm
M20 - SR23 L max. 370mm
M24 - SR23 L max. 370mm
G1" - SR30 L max. 1000mm
NR70 - SR40 L max. 1200mm
NR85 - SR40 L max. 1200mm

Float type
SR17
SR23
SR30
SR40

T = with Temperature
O = without Temperature

NA = Level-display
TA = Temperature-display

Total length-L switching tube (mm)
standard length
L=250 L=800
L=370 L=1000
L=500 L=1200

1 M12
2 M12

Thermal contact
TF10Ö
TF40Ö
TF50Ö
TF60Ö (S)
TF70Ö (S)
TF80Ö (S)
TF90Ö
(Ö preferred)

Technical data

Description

The level temperature regulator, type Indicator - MA - 1 designed for container installation, is a contact less electromagnetic switch serving for continuous teletransmission of liquid levels and temperature.
Via cables of any length, level and temperature can be continuously evaluated for automatic control and display. The level controller contains a resistance measuring chain and a Pt100 resistor.
The level and temperature dependent signal is converted in the integrated measuring transducer into a linear current change of 4-20 mA and is evaluated by electronics with LED - display, which indicates the current display.

The level controller is maintenance-free when nondeposit media are used.

The device must only be installed by specialists.

Other temperature ranges on request.

Technical data

Switch tube	Brass
Tank connection:	Polyamid with flat seal Connection thread: Brass
Nominal pressure	1 bar max.
Temperature of medium	100°C max.
Cabinet	Polycarbonate, IP67
Float	Hard PU
Connection	M12 IP67 series - male connector
Operating voltage	12V ... 30V DC
Measuring range	4-20 mA = 0-100% = 0-100°C
Thermal elements	Pt100
Contact grid	5 / 7.5 mm
Working resistance	RB = $\frac{U-12V}{20mA}$
Display	LED 3-digit -10 - 100°C (°F) / 0 - 100%
Mounting position	vertical ± 30°
*Thermal contact	Sheet TR-GB-507
*Indicator	Sheet IND-GB

GOLDAMMER
REGELUNGSTECHNIK GMBH
SCHÖLLERSHEIDER STR. 15
P.O.BOX 10 02 17
D-40802 METTMANN
PHONE (49) 2104/12093
FAX (49) 2104/12028
www.Goldammer-Regelungstechnik.com

Indicator - MA - 1 - R (remote installation)

Level - temperature regulator 4-20 mA with LED display

serial No.	Date
IND-GB- 108a	03/18

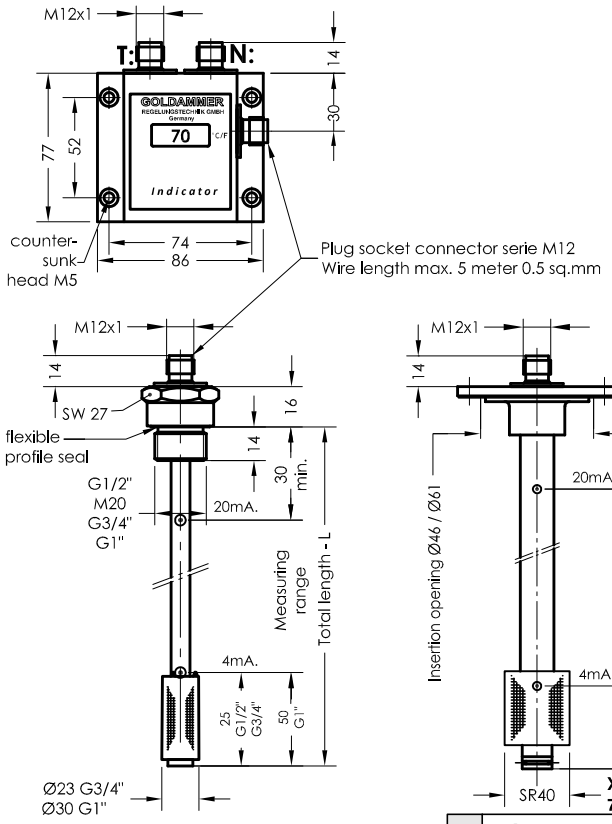

Pin assignment

Plug securing

1 x M12

1 = +12V-30V DC
2 = Temperature 4 - 20mA
3 = GND - Indication
4 = Level 4 - 20mA
5 = Thermal contact TF

1 x M12

1 = +12V-30V DC
4 = Level 4 - 20mA
3 = GND - Indication
5 = Thermal contact TF

2 x M12

T: 1 = +12V-30V DC
2 = Temperature 4 - 20mA
3 = GND - Indication
4 = Fixed contact TF

N: 1 = +12V-30V DC
4 = Level 4 - 20mA

Plug securing

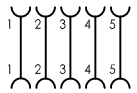

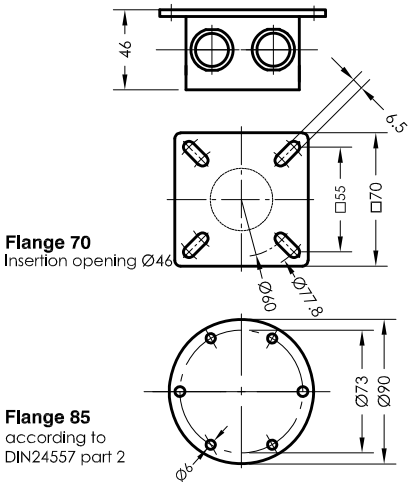

Flange 70
Insertion opening Ø46

Flange 85
according to DIN24557 part 2

Order code

Specimen order

NR70 - MA - 1 - R - SR40 - T - TA - L250 -2M12-TF70Ö

Tank connection:
G1/2" - SR23 L max. 370mm
M20 - SR23 L max. 370mm
G3/4" - SR23 L max. 370mm
G1" - SR30 L max. 1000mm
NR70 - SR40 L max. 1200mm
NR85 - SR40 L max. 1200mm

Float type
SR17
SR23
SR30
SR40

T = with Temperature
O = without Temperature

NA = Level-display
TA = Temperature-display

Total length-L switching tube (mm)
standard length
L=250 L=800
L=370 L=1000
L=500 L=1200

1 M12
2 M12

Thermal contact
TF10Ö
TF40Ö
TF50Ö
TF60Ö (S)
TF70Ö (S)
TF80Ö (S)
TF90Ö
(Ö preferred)

Equipment

Art. Nr. 50100080 - connecting wire circuit serie M12 with 2 cable sockets 5-pole length 3m
Art. Nr. 50100076 - connecting wire circuit serie M12 with 2 cable sockets 5-pole length 5m

Other length available on request

Technical data

Description

The level temperature regulator, type Indicator - MA - 1 - R (remote installation) designed for container installation, is a contact less electromagnetic switch serving for continuous teletransmission of liquid levels and temperature.
Via cables of any length, level and temperature can be continuously evaluated for automatic control and display. The level controller contains a resistance measuring chain and a Pt100 resistor.
The level and temperature dependent signal is converted in the integrated measuring transducer into a linear current change of 4-20 mA and is evaluated by electronics with LED - display, which indicates the current display.

The level controller is maintenance-free when nondeposit media are used.

The device must only be installed by specialists.

Other temperature ranges on request.

Technical data

Switch tube	Brass
Tank connection:	Polyamid with flat seal Connection thread: Brass
Nominal pressure	1 bar max.
Temperature of medium	100°C max.
Cabinet	Polycarbonate, IP67
Float	Hard PU
Connection	M12 IP67 series - male connector
Operating voltage	12V ... 30V DC
Measuring range	4-20 mA = 0-100% = 0-100°C
Thermal elements	Pt100
Contact grid	5 / 7.5 mm
Working resistance	RB = U-12V / 20mA
Display	LED 3-digit -10 - 100°C (°F) / 0 - 100%
Mounting position	vertical ± 30°
*Thermal contact	Sheet TR-GB-507
*Indicator	Sheet IND-GB

GOLDAMMER
REGELUNGSTECHNIK GMBH

SCHÖLLERSHEIDER STR. 15
P.O.BOX 10 02 17
D-40802 METTMANN

PHONE (49) 2104/12093
FAX (49) 2104/12028
www.Goldammer-Regelungstechnik.com

Indicator-MA-2

Level - temperature regulator 4-20 mA with LED display

serial No.	Date
IND-GB- 109	03/18

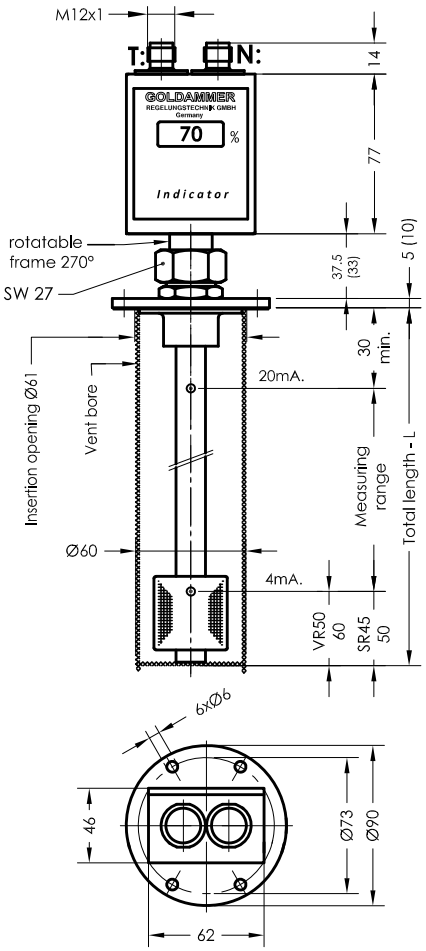

Flange 85
according to
DIN24557 part 2

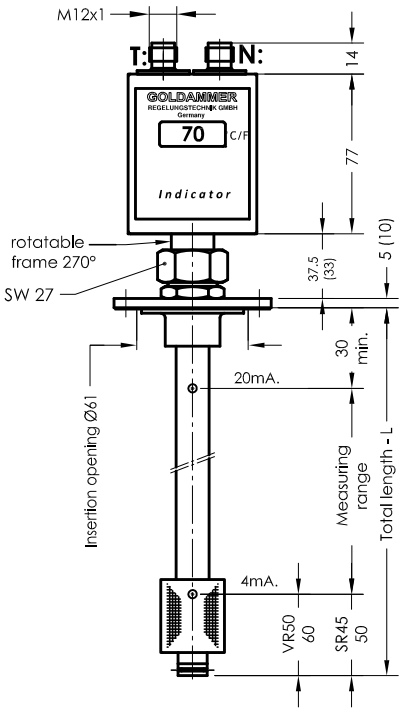

Pin assighnment

Plug securing

1 x M12
1 = +12V-30V DC
2 = Temperature 4 - 20mA
3 = GND - Indication
4 = Level 4 - 20mA
5 = Thermal contact TF

1 x M12
1 = +12V-30V DC
4 = Level 4 - 20mA
3 = GND - Indication
5 = Thermal contact TF

2 x M12
T: 1 = +12V-30V DC
2 = Temperature 4 - 20mA
3 = GND - Indication
4 = Fixed contact TF

N: 1 = +12V-30V DC
4 = Level 4 - 20mA

Order code

Specimen order

NR85-MAS-2-SR45-T-TA-L250-MS-2M12-TF70Ö

Tank connection:
NR85-L max. 2000mm

MA = without protective tube
MAS = with protective tube

Float type
SR45
VR50

T = with Temperature
O = without Temperature

NA = Level-display
TA = Temperature-display

Total length-L
switching tube
(mm)
standard length
L=250 L=800
L=370 L=1000
L=500 L=1200
L= max. 2000mm

Execution
MS = Brass
VA = Flange,
Protective tube
Switch tube
and float stainless steel

1 M12
2 M12

Thermal contact
TF10Ö
TF40Ö
TF50Ö
TF60Ö (S)
TF70Ö (S)
TF80Ö (S)
TF90Ö
(Ö preferred)

Technical data

Description

The level temperature regulator, type Indicator - MA - 2 designed for container installation, is a contact less electromagnetic switch serving for continuous teletransmission of liquid levels and temperature.
Via cables of any length, level and temperature can be continuously evaluated for automatic control and display. The level controller contains a resistance measuring chain and a Pt100 resistor.
The level and temperature dependent signal is converted in the integrated measuring transducer into a linear current change of 4-20 mA and is evaluated by electronics with LED - display, which indicates the current display.

The level controller is maintenance-free when nondeposit media are used.

The device must only be installed by specialists.

Other temperature ranges on request.

Technical data

Protective tube	Stainless steel
Switch tube	Brass, stainless steel
Tank connection:	Polyamid or Stainless steel with flat seal
Nominal pressure	1 bar max. / VR50 10 bar max.
Temperature of medium	100°C max.
Cabinet	Polycarbonate, IP67
Float	Hard PU, VR50 Stainless steel
Connection	M12 IP67 series - male connector
Operating voltage	12V ... 30V DC
Measuring range	4-20 mA = 0-100% = 0-100°C
Thermal elements	Pt100
Contact grid	7.5 mm
Working resistance	RB = U-12V / 20mA
Display	LED 3-digit -10 - 100°C (°F) / 0 - 100%
Mounting position	vertical ± 30°
*Thermal contact	Sheet TR-GB-507
*Indicator	Sheet IND-GB

GOLDAMMER
REGELUNGSTECHNIK GMBH
SCHÖLLERSHEIDER STR. 15
P.O.BOX 10 02 17
D-40802 METTMANN
PHONE (49) 2104/12093
FAX (49) 2104/12028
www.Goldammer-Regelungstechnik.com

Indicator - MA - 2 - 150°C max

Level - temperature regulator 4-20 mA with LED display

serial No. Date
IND-GB- 109-1 03/18

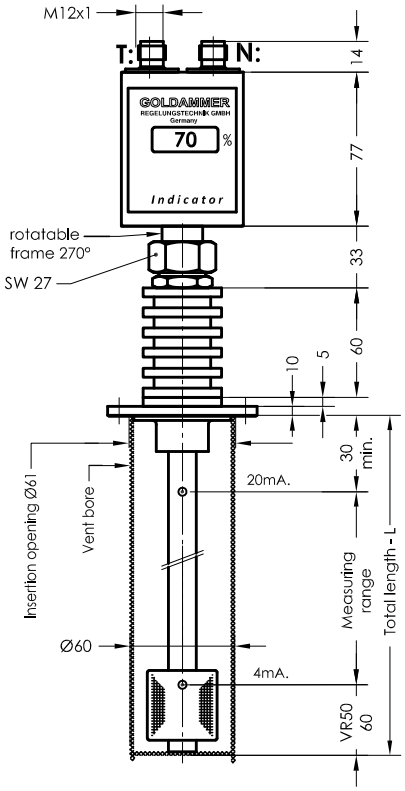

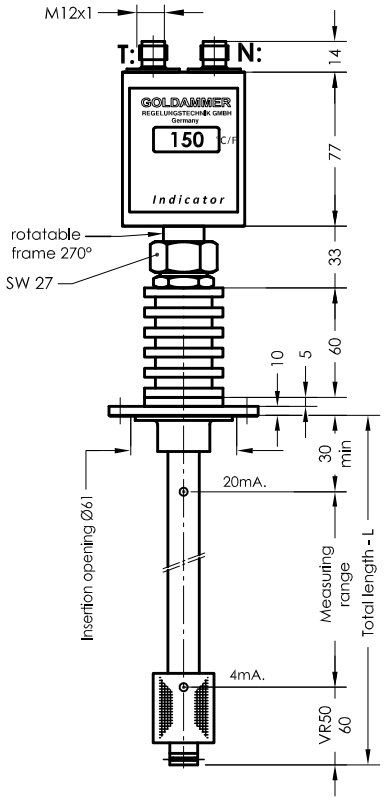

Pin assignment

Plug securing

1 x M12
1 = +12V-30V DC
2 = Temperature 4 - 20mA
3 = GND - Indication
4 = Level 4 - 20mA
5 = Thermal contact TF

1 x M12
1 = +12V-30V DC
4 = Level 4 - 20mA
3 = GND - Indication
5 = Thermal contact TF

2 x M12
T: 1 = +12V-30V DC
2 = Temperature 4 - 20mA
3 = GND - Indication
4 = Fixed contact TF

N: 1 = +12V-30V DC
4 = Level 4 - 20mA

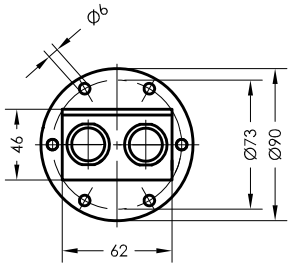

Flange 85
according to
DIN24557 part 2

Order code

Specimen order

NR85 - MAS - 2 - VR50 - T - TA - L250 - 2M12- VA - 150°C

Tank connection:
NR85-L max. 2000mm

MA = without protective tube
MAS = with protective tube

Float type
VR50

T = with Temperature
O = without Temperature

NA = Level-display
TA = Temperature-display

Total length-L
switching tube (mm)
standard length
L=250 L=800
L=370 L=1000
L=500 L=1200
L= max. 2000mm

1 M12
2 M12

Execution
VA = Flange,
Protective tube,
Switch tube and float
stainless steel

Technical data

Description

The level temperature regulator, type Indicator-MA-2-150°C max designed for container installation, is a contact less electromagnetic switch serving for continuous teletransmission of liquid levels and temperature.
Via cables of any length, level and temperature can be continuously evaluated for automatic control and display. The level controller contains a resistance measuring chain and a Pt100 resistor.
The level and temperature dependent signal is converted in the integrated measuring transducer into a linear current change of 4-20 mA and is evaluated by electronics with LED - display, which indicates the current display.

The level controller is maintenance-free when nondeposit media are used.
The circulation of air of cooling fins must be ensured.

The device must only be installed by specialists.

Technical data

Protective tube	Stainless steel
Switch tube	Stainless steel
Tank connection	Stainless steel with flat seal Viton
Nominal pressure	1 bar max.
Temperature of medium	150°C max.
Cabinet	Polycarbonate, IP67
Float	VR50 stainless steel
Connection	M12 IP67 series - male connector
Operating voltage	12V ... 30V DC
Measuring range	4-20 mA = 0-100% = 0-160°C
Thermal elements	Pt100
Contact grid	7.5 mm
Working resistance	RB = U-12V / 20mA
Display	LED 3-digit -10-160°C (°F) / 0-100%
Mounting position	vertical ± 30°

GOLDAMMER
REGELUNGSTECHNIK GMBH
SCHÖLLERSHEIDER STR. 15
P.O.BOX 10 02 17
D-40802 METTMANN
PHONE (49) 2104/12093
FAX (49) 2104/12028
www.Goldammer-Regelungstechnik.com

Indicator - MA - 2 - R (remote installation)

Level - temperature regulator 4-20 mA with LED display

serial No.	Date
IND-GB- 109a	03/18

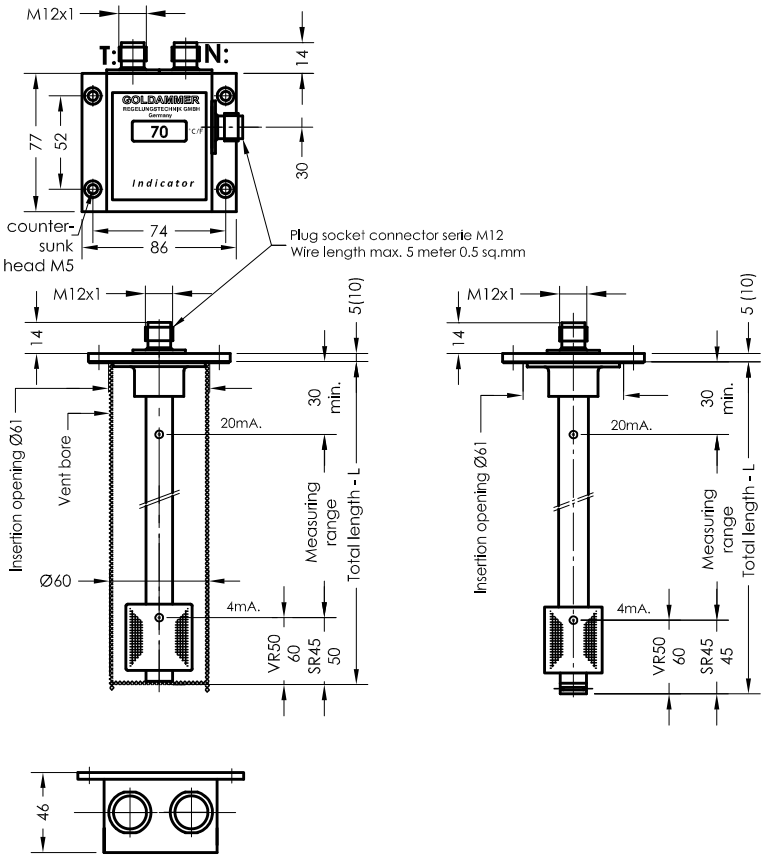

Pin assignment

Plug securing

1 x M12

1 = +12V-30V DC
2 = Temperature 4 - 20mA
3 = GND - Indication
4 = Level 4 - 20mA
5 = Thermal contact TF

1 x M12

1 = +12V-30V DC
4 = Level 4 - 20mA
3 = GND - Indication
5 = Thermal contact TF

2 x M12

T: 1 = +12V-30V DC
2 = Temperature 4 - 20mA
3 = GND - Indication
4 = Fixed contact TF

N: 1 = +12V-30V DC
4 = Level 4 - 20mA

Plug securing

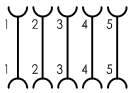

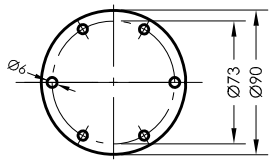

Flange 85
according to
DIN24557 part 2

Order code

Specimen order

NR85 - MAS - 2 - R - SR45 - T - TA - L250 - MS - 2M12 - TF70Ö

Tank connector:
NR85-L max. 2000mm

MA = without protective tube
MAS = with protective tube

Float type
SR45
VR50

T = temperature
0 = without temperature

NA = level indication
TA = temperature indication

Total length-L switching tube (mm)
standard length
L= 280 L= 800
L= 370 L= 1000
L= 500 L= 1200
L= max. 2000mm

MS - brass
VA - Flange, Protective tube, Switching tube and Float stainless steel

1 M12
2 M12

Thermal contact
TF10Ö
TF40Ö
TF50Ö
TF60Ö (S)
TF70Ö (S)
TF80Ö (S)
TF90Ö
(Ö preferred)

Equipment
Art. Nr. 50100080 - connecting wire circuit serie M12 with 2 cable sockets 5-pole length 3m
Art. Nr. 50100076 - connecting wire circuit serie M12 with 2 cable sockets 5-pole length 5m

Other length available on request

Technical data

Description

The level temperature regulator, type Indicator - MA - 2 - R designed for remote container installation, is a contact less electromagnetic switch serving for continuous teletransmission of liquid levels and temperature.
Via cables of any length, level and temperature can be continuously evaluated for automatic control and display. The level controller contains a resistance measuring chain and a Pt100 resistor.
The level and temperature dependent signal is converted in the integrated measuring transducer into a linear current change of 4-20 mA and is evaluated by electronics with LED - display, which indicates the current display.

The level controller is maintenance-free when nondeposit media are used.

The device must only be installed by specialists.

Other temperature ranges on request.

Technical data

Protective tube	Stainless steel
Switch tube	Brass, stainless steel
Tank connection:	Polyamid or stainless steel with flat seal
Nominal pressure	1 bar max. / VR50 10 bar max.
Temperature of medium	100°C max.
Cabinet	Polycarbonate, IP67
Float	Hard PU, VR50 stainless steel
Connection	M12 IP67 series - male connector
Operating voltage	12V ... 30V DC
Measuring range	4-20 mA = 0-100% = 0-100°C
Thermal elements	Pt100
Contact grid	7.5 mm
Working resistance	RB = U-12V / 20mA
Display	LED 3-digit -10 - 100°C (°F) / 0 - 100%
Mounting position	Vertical ± 30°
*Thermal contact	Sheet TR-GB-507
*Indicator	Sheet IND-GB

GOLDAMMER
REGELUNGSTECHNIK GMBH
SCHÖLLERSHEIDER STR. 15
P.O.BOX 10 02 17
D-40802 METTMANN
PHONE (49) 2104/12093
FAX (49) 2104/12028
www.Goldammer-Regelungstechnik.com

Indicator - MA - 2 - R - 150°C max (remote installation)

Level - temperature regulator 4-20 mA with LED display

serial No. Date
IND-GB- 109a-1 03/18

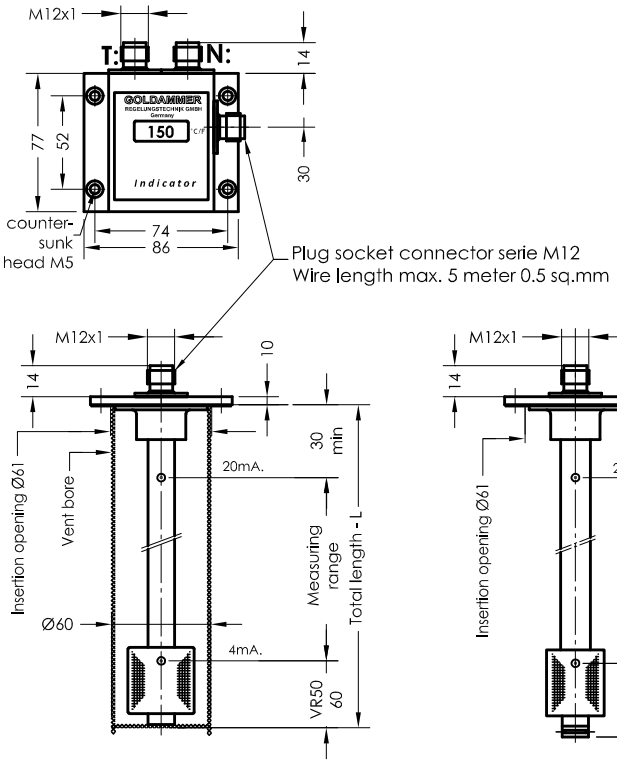

Pin assignment

Plug securing

1 x M12
1 = +12V-30V DC
2 = Temperature 4 - 20mA
3 = GND - Indication
4 = Level 4 - 20mA
5 = Thermal contact TF

1 x M12
1 = +12V-30V DC
4 = Level 4 - 20mA
3 = GND - Indication
5 = Thermal contact TF

2 x M12
T: 1 = +12V-30V DC
2 = Temperature 4 - 20mA
3 = GND - Indication
4 = Fixed contact TF

N: 1 = +12V-30V DC
4 = Level 4 - 20mA

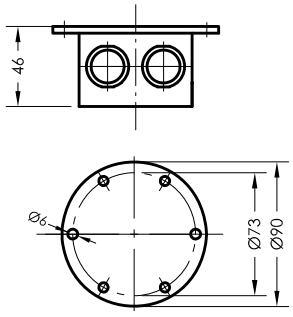

Flange 85
according to
DIN24557 part 2

Order code

Specimen order

NR85 - MAS - 2 - R - VR50 - T - TA - L250 - VA - 3M12 - 150°C

Tank connector:
NR85-L max. 2000mm

MA = without protective tube
MAS = with protective tube

Float type
VR50

T = temperature
0 = without temperature

NA = level indication
TA = temperature indication

3M12
4M12

Execution
VA -Flange, Protective tube
Switching tube and Float
stainless steel

Total length-L
switching tube (mm)
standard length
L= 280 L=800
L= 370 L=1000
L= 500 L=1200
L= max. 2000mm

Equipment
Art. Nr. 50100080 - connecting wire circuit serie M12 with 2 cable sockets 5-pole length 3m
Art. Nr. 50100076 - connecting wire circuit serie M12 with 2 cable sockets 5-pole length 5m

Other length available on request

Technical data

Description

The level temperature regulator, type Indicator-MA-2-R-150°C max (remote installation) designed for container installation, is a contact less electromagnetic switch serving for continuous teletransmission of liquid levels and temperature.
Via cables of any length, level and temperature can be continuously evaluated for automatic control and display. The level controller contains a resistance measuring chain and a Pt100 resistor.
The level and temperature dependent signal is converted in the integrated measuring transducer into a linear current change of 4-20 mA and is evaluated by electronics with LED - display, which indicates the current display.

The level controller is maintenance-free when nondeposit media are used.

The circulation of air of cooling fins must be ensured.

The device must only be installed by specialists.

Technical data

Protective tube	Stainless steel
Switch tube	Stainless steel
Tank connection	Stainless steel with flat seal Viton
Nominal pressure	1 bar max.
Temperature of medium	150°C max.
Cabinet	Polycarbonate, IP67
Float	VR50 stainless steel
Connection	M12 IP67 series - male connector
Operating voltage	12V ... 30V DC
Measuring range	4-20 mA = 0-100% = 0-160°C
Thermal elements	Pt100
Contact grid	7.5 mm
Working resistance	RB = $\frac{U-12V}{20mA}$
Display	LED 3-digit -10-160°C (°F) / 0 - 100%
Mounting position	vertical ± 30°

GOLDAMMER
REGELUNGSTECHNIK GMBH
SCHÖLLERSHEIDER STR. 15 PHONE (49) 2104/12093
P.O.BOX 10 02 17 FAX (49) 2104/12028
D-40802 METTMANN www.Goldammer-Regelungstechnik.com

Indicator - MA - 2 - R- V (remote installation)

Level - temperature regulator 4-20 mA with LED display

serial No. Date
IND-GB- 109a/2 03/18

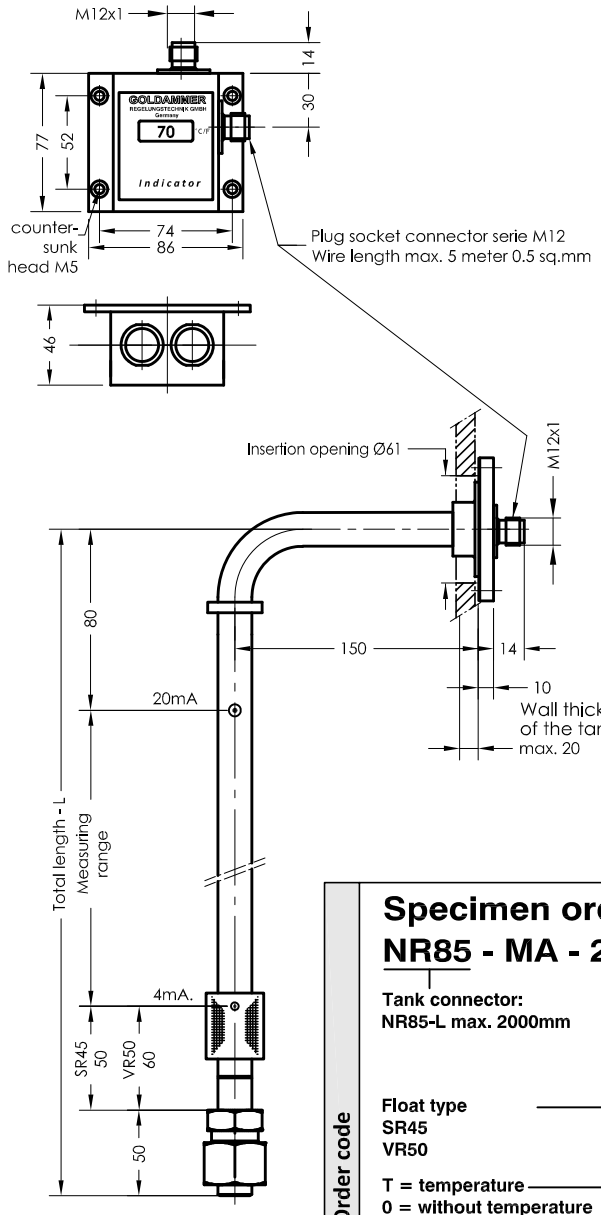

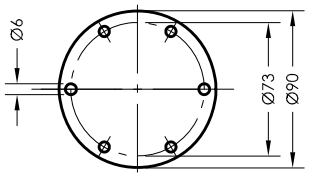

Flange 85
according to DIN24557 part 2

Pin assignment

Plug securing

1 = +12V-30V DC
2 = Temperature 4 - 20mA
3 = GND - Indication
4 = Level 4 - 20mA

1 = +12V-30V DC
4 = Level 4 - 20mA
3 = GND - Indication

Plug securing

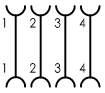

Order code

Specimen order

NR85 - MA - 2 - R - SR45 - T - TA - L250 - VA - 3M12

Tank connector:
NR85-L max. 2000mm

Float type
SR45
VR50

T = temperature
0 = without temperature

NA = level indication
TA = temperature indication

Total length-L
switching tube (mm)
standard length
L= 280 L= 800
L= 370 L= 1000
L= 500 L= 1200
L= max. 2000mm

Execution
VA - Flange, Switching tube and Float stainless steel

Equipment
Art. Nr. 50100080 - connecting wire circuit serie M12 with 2 cable sockets 5-pole length 3m
Art. Nr. 50100076 - connecting wire circuit serie M12 with 2 cable sockets 5-pole length 5m

Other length available on request

Technical data

Description

The level temperature regulator, type Indicator - MA - 2 - R (remote installation) designed for container installation, is a contact less electromagnetic switch serving for continuous teletransmission of liquid levels and temperature.
Via cables of any length, level and temperature can be continuously evaluated for automatic control and display. The level controller contains a resistance measuring chain and a Pt100 resistor.
The level and temperature dependent signal is converted in the integrated measuring transducer into a linear current change of 4-20 mA and is evaluated by electronics with LED - display, which indicates the current display.

The level controller is maintenance-free when nondeposit media are used.

The device must only be installed by specialists.

Other temperature ranges on request.

Technical data

Switch tube	Stainless steel
Tank connection	Stainless steel with flat seal
Nominal pressure	1 bar max. / VR50 10 bar max.
Temperature of medium	100°C max.
Cabinet	Polycarbonate, IP67
Float	Hard PU, VR50 stainless steel
Connection	M12 IP67 series - male connector
Operating voltage	12V ... 30V DC
Measuring range	4-20 mA = 0-100% = 0-100°C
Thermal elements	Pt100
Contact grid	7.5 mm
Working resistance	RB = $\frac{U-12V}{20mA}$
Display	LED 3-digit -10 - 100°C (°F) / 0 - 100%
Mounting position	vertical ± 30°

GOLDAMMER
REGELUNGSTECHNIK GMBH
SCHÖLLERSHEIDER STR. 15 PHONE (49) 2104/12093
P.O.BOX 10 02 17 FAX (49) 2104/12028
D-40802 METTMANN www.Goldammer-Regelungstechnik.com

Indicator-MA-3

Level - temperature regulator 4-20 mA with LED display

serial No.	Date
IND-GB- 109b	03/18

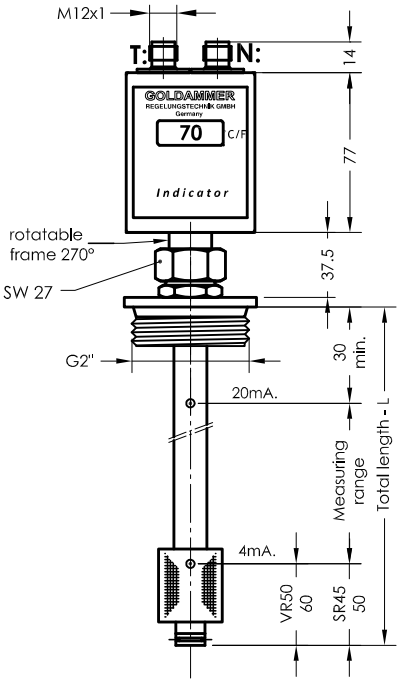

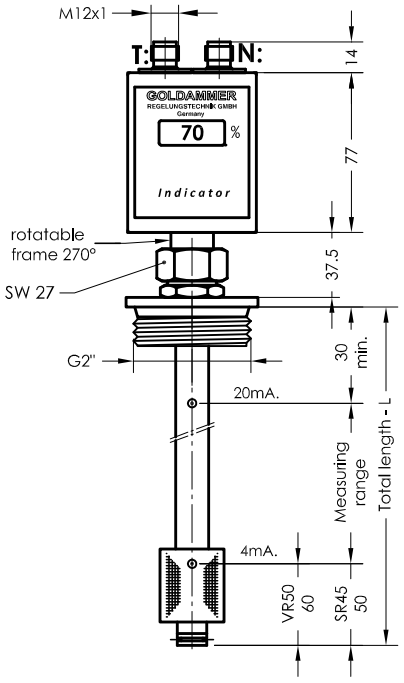

Pin assignment

Plug securing

1 x M12
1 = +12V-30V DC
2 = Temperature 4 - 20mA
3 = GND - Indication
4 = Level 4 - 20mA
5 = Thermal contact TF

1 x M12
1 = +12V-30V DC
4 = Level 4 - 20mA
3 = GND - Indication
5 = Thermal contact TF

2 x M12
T: 1 = +12V-30V DC
2 = Temperature 4 - 20mA
3 = GND - Indication
4 = Fixed contact TF

N: 1 = +12V-30V DC
4 = Level 4 - 20mA

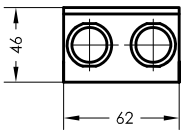

Order code

Specimen order

G2" - MA - 3 - SR45 -T - TA - L250 - MS - 2M12 - TF70Ö

Tank connector:
G2" - L 3000mm max.

Float type
SR45
VR50

T = Temperature
O = without temperature

NA = Level indication
TA = Temperature indication

Total length-L
switching tube (mm)
standard length
L=250 L=800
L=370 L=1000
L=500 L=1200
L= max. 2000mm

Execution
MS - Brass
VA - Flange, Switching tube and Float stainless steel

1 M12
2 M12

Thermal contact
TF10Ö
TF40Ö
TF50Ö
TF60Ö (S)
TF70Ö (S)
TF80Ö (S)
TF90Ö
(Ö preferred)

Technical data

Description

The level temperature regulator, type Indicator - MA - 3 designed for container installation, is a contact less electromagnetic switch serving for continuous teletransmission of liquid levels and temperature.
Via cables of any length, level and temperature can be continuously evaluated for automatic control and display. The level controller contains a resistance measuring chain and a Pt100 resistor.
The level and temperature dependent signal is converted in the integrated measuring transducer into a linear current change of 4-20 mA and is evaluated by electronics with LED - display, which indicates the current display.

The level controller is maintenance-free when nondeposit media are used.

The device must only be installed by specialists.

Other temperature ranges on request.

Technical data

Switch tube	Brass, stainless steel
Tank connection:	Galvanized steel / stainless steel G2" SW36 with seal Cu, DIN 7603
Nominal pressure	1 bar max. / VR50 10 bar max.
Temperature of medium	100°C max.
Cabinet	Polycarbonate, IP67
Float	Hard PU, VR50 stainless steel
Connection	M12 IP67 series - male connector
Operating voltage	12V ... 30V DC
Measuring range	4-20 mA = 0-100% = 0-100°C
Thermal elements	Pt100
Contact grid	7.5 mm
Working resistance	RB = U-12V / 20mA
Display	LED 3-digit 0 - 100% / -10 - 100°C (F)
Mounting position	Vertical ± 30°
*Thermal contact	Sheet TR-GB-507
*Indicator	Sheet IND-GB

Other temperature ranges on request

GOLDAMMER
REGELUNGSTECHNIK GMBH

SCHÖLLERSHEIDER STR. 15
P.O.BOX 10 02 17
D-40802 METTMANN

PHONE (49) 2104/12093
FAX (49) 2104/12028
www.Goldammer-Regelungstechnik.com

Indicator - MA - 3 - R (remote installation)

Level - temperature regulator 4-20 mA with LED display

serial No. Date
IND-GB- 109c 03/18

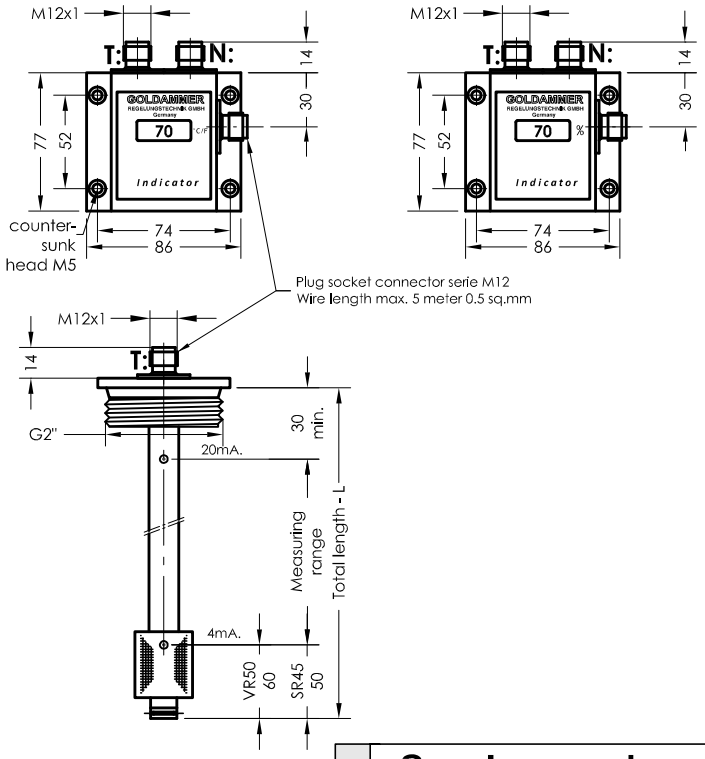

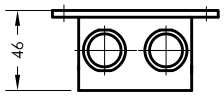

Pin assignment

Plug securing

1 x M12
1 = +12V-30V DC
2 = Temperature 4 - 20mA
3 = GND - Indication
4 = Level 4 - 20mA
5 = Thermal contact TF

1 x M12
1 = +12V-30V DC
4 = Level 4 - 20mA
3 = GND - Indication
5 = Thermal contact TF

2 x M12
T: 1 = +12V-30V DC
2 = Temperature 4 - 20mA
3 = GND - Indication
4 = Fixed contact TF

N: 1 = +12V-30V DC
4 = Level 4 - 20mA

Plug securing

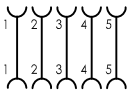

Order code

Specimen order

G2" - MA - 3 - R - SR45 -T - TA - L250 - MS - 2M12 - TF70Ö

Tank connector:
G2" - L 3000mm max.

Float type
SR45
VR50

T = Temperature
O = without temperature

NA = Level indication
TA = Temperature indication

Total length-L switching tube (mm)
standard length
L=250 L=800
L=370 L=1000
L=500 L=1200
L= max. 2000mm

Execution
MS - Brass
VA - Flange, Switching tube and Float stainless steel

1 M12
2 M12

Thermal contact
TF10Ö
TF40Ö
TF50Ö
TF60Ö (S)
TF70Ö (S)
TF80Ö (S)
TF90Ö
(Ö preferred)

Equipment

Art. Nr. 50100080 - connecting wire circuit serie M12 with 2 cable sockets 5-pole length 3m
Art. Nr. 50100076 - connecting wire circuit serie M12 with 2 cable sockets 5-pole length 5m

Other length available on request

Technical data

Description

The level temperature regulator, type Indicator - MA - 3-R (remote installation) designed for container installation, is a contact less electromagnetic switch serving for continuous teletransmission of liquid levels and temperature.
The level controller contains a resistance measuring chain and a Pt100 resistor.
The level and temperature dependent signal is converted in the integrated measuring transducer into a linear current change of 4-20 mA and is evaluated by electronics with LED - display, which indicates the current display.

The level controller is maintenance-free when nondeposit media are used.

The device must only be installed by specialists.

Other temperature ranges on request.

Other temperature ranges on request

Technical data

Switch tube	Brass, stainless steel
Tank connection:	Galvanized steel / stainless steel G2" SW36 with seal Cu, DIN 7603
Nominal pressure	1 bar max. / VR50 10 bar max.
Temperature of medium	100°C max.
Cabinet	Polycarbonate, IP67
Float	Hard PU, VR50 stainless steel
Connection	M12 IP67 series - male connector
Operating voltage	12V ... 30V DC
Measuring range	4-20 mA = 0-100% = 0-100°C
Thermal elements	Pt100
Contact grid	7.5 mm
Working resistance	RB = U-12V / 20mA
Display	LED 3-digit 0 - 100% / -10 - 100°C (F)
Mounting position	Vertical ± 30°
*Thermal contact	Sheet TR-GB-507
*Indicator	Sheet IND-GB

GOLDAMMER
REGELUNGSTECHNIK GMBH
SCHÖLLERSHEIDER STR. 15
P.O.BOX 10 02 17
D-40802 METTMANN
PHONE (49) 2104/12093
FAX (49) 2104/12028
www.Goldammer-Regelungstechnik.com

Indicator - L-1

Level - controller with PNP level outputs
LED display

serial No. Date
IND-GB- 110 03/18

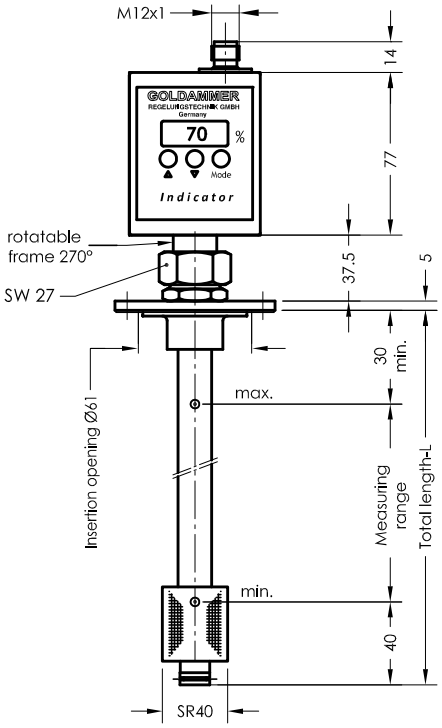

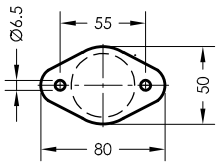

Flange 50
Insertion opening Ø41

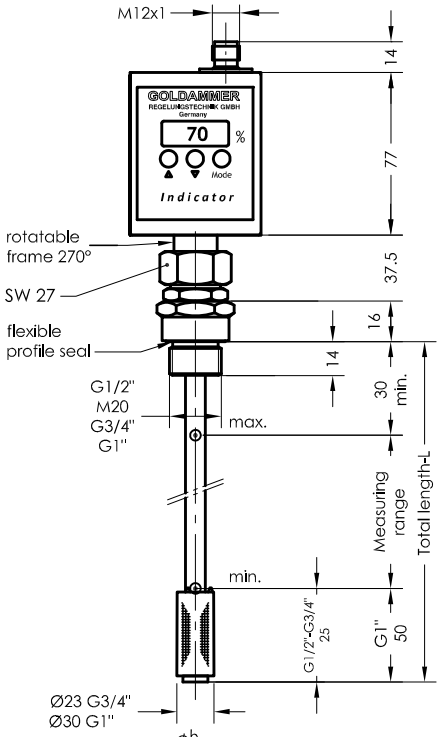

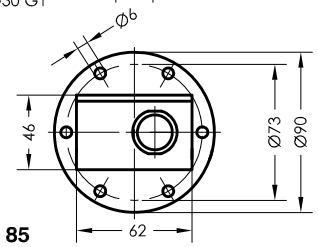

Flange 85
according to DIN24557 part 2

Pin assignment

Plug securing

1 = +12V-30V DC
3 = GND - Indication
4 = level L1 PNP
2 = level L2 PNP
5 = level L3 PNP

PNP Output freely programmable

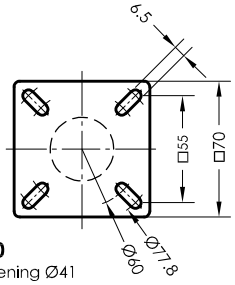

Flange 70
Insertion opening Ø41

Order code

NR70 - L - 1 - SR40 - L250 - L3 - 1M12

Tank connection:
G1/2" - SR17 L max. 370mm
M20 - SR17 L max. 370mm
G3/4" - SR23 L max. 370mm
G1" - SR30 L max. 1000mm
NR50 - SR40 L max. 800mm
NR70 - SR40 L max. 2000mm
NR85 - SR40 L max. 2000mm

Float type
SR17
SR23
SR30
SR40

Level output
L1
L2
L3

Total length-L
switching tube (mm)
standard length
L=250 L=800
L=370 L=1000
L=500 L=1200

Technical data

Description

The level - controller type Indicator - L - 1 is a contactless - operating magnetic switch and is used for continuous monitoring and control of liquids. It contains a resistance measuring chain. The level - dependent signals are transformed in the control unit.

Level monitoring and control is by means of an electronic circuit with an LED display that indicates the actual values from 0-100%
The level switching points are adjusted by means of three buttons fitted on the control unit.
The level switching points and switching function (make / break) can be regulated while the start-up.

The level controller is maintenance-free when nondeposit media are used.

The device must only be installed by specialists.

Other temperature ranges on request.

Technical data

Switch tube	Brass
Tank connection	Polyamid with flat seal Connection thread: Brass
Nominal pressure	1 bar max.
Cabinet	Polycarbonate, IP67
Temperature of medium	100°C max.
Float	Hard PU
Connection	M12 IP67 series - male connector
Operating voltage	12V ... 30V DC
Level contacts	3 PNP
Contact grid	5 / 7.5 mm
Display	LED 3-digit 0 bis 100%
Switching current	1A max.
Mounting position	vertical ± 30°
*Indicator	Sheet IND-GB

GOLDAMMER
REGELUNGSTECHNIK GMBH
SCHÖLLERSHEIDER STR. 15 PHONE (49) 2104/12093
P.O.BOX 10 02 17 FAX (49) 2104/12028
D-40802 METTMANN www.Goldammer-Regelungstechnik.com

Indicator - L - 1 - R (remote installation)

Level - controller with PNP level switching outputs and LED display

serial No. Date
IND-GB- 111 03/18

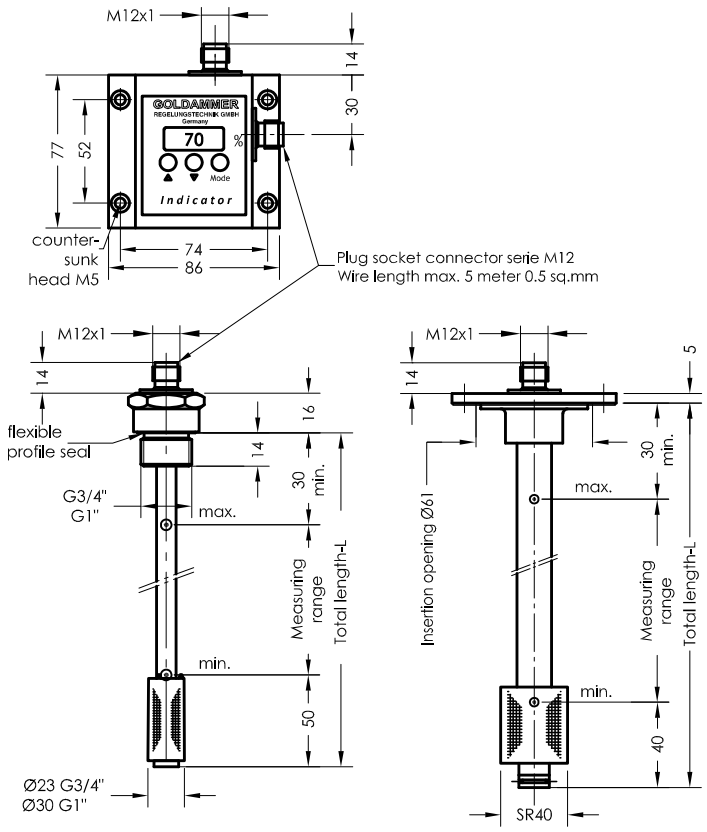

Pin assignment

Plug securing

1 = +12V-30V DC
3 = GND - Indication
4 = level L1 PNP
2 = level L2 PNP
5 = level L3 PNP

PNP Output freely programmable

Plug securing

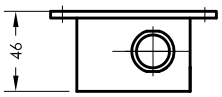

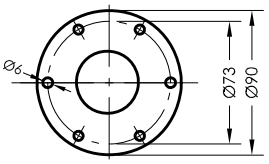

Flange 85
according to DIN24557 part 2

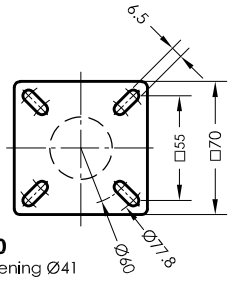

Flange 70
Insertion opening Ø41

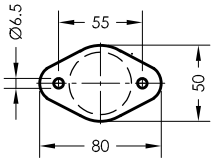

Flange 50
Insertion opening Ø41

Order code

Specimen order

NR70 - L - 1 - R - SR40 - L250 - L3 - 3M12

Tank connection:
G3/4" - SR23 L max. 370mm
G1" - SR30 L max. 1000mm
NR50 - SR40 L max. 800mm
NR70 - SR40 L max. 2000mm
NR85 - SR40 L max. 2000mm

Total length-L
switching tube (mm)
standard length
L=250 L=800
L=370 L=1000
L=500 L=1200

Float type
SR17
SR23
SR30
SR40

Level output
L1
L2
L3

Equipment

Art. Nr. 50100080 - connecting wire circuit serie M12 with 2 cable sockets 5-pole length 3m
Art. Nr. 50100076 - connecting wire circuit serie M12 with 2 cable sockets 5-pole length 5m
Other length available on request

Technical data

Description

The level - controller type Indicator - L - 1 - R (remote installation) is a contactless - operating magnetic switch and is used for continuous monitoring and control of liquids. It contains a resistance measuring chain. The level - dependent signals are transformed in the control unit.

Level monitoring and control is by means of an electronic circuit with an LED display that indicates the actual values from 0-100%
The level switching points are adjusted by means of three buttons fitted on the control unit.
The level switching points and switching function (make / break) can be regulated while the start-up.

The level controller is maintenance-free when nondeposit media are used.

The device must only be installed by specialists.

Other temperature ranges on request.

Technical data

Switch tube	Brass
Tank connection	Polyamid with flat seal Connection thread: Brass
Nominal pressure	1 bar max.
Cabinet	Polycarbonate, IP67
Temperature of medium	100°C max.
Float	Hard PU
Connection	M12 IP67 series - male connector
Operating voltage	12V ... 30V DC
Level contacts	3 PNP
Contact grid	7.5 mm
Display	LED 3-digit 0 bis 100%
Switching current	1A max.
Mounting position	vertical ± 30°
*Indicator	Sheet IND-GB

GOLDAMMER
REGELUNGSTECHNIK GMBH
SCHÖLLERSHEIDER STR. 15 PHONE (49) 2104/12093
P.O.BOX 10 02 17 FAX (49) 2104/12028
D-40802 METTMANN www.Goldammer-Regelungstechnik.com

Indicator - L - 2

Level controller with PNP level switching outputs
LED level display

serial No. Date
IND-GB- 112 03/18

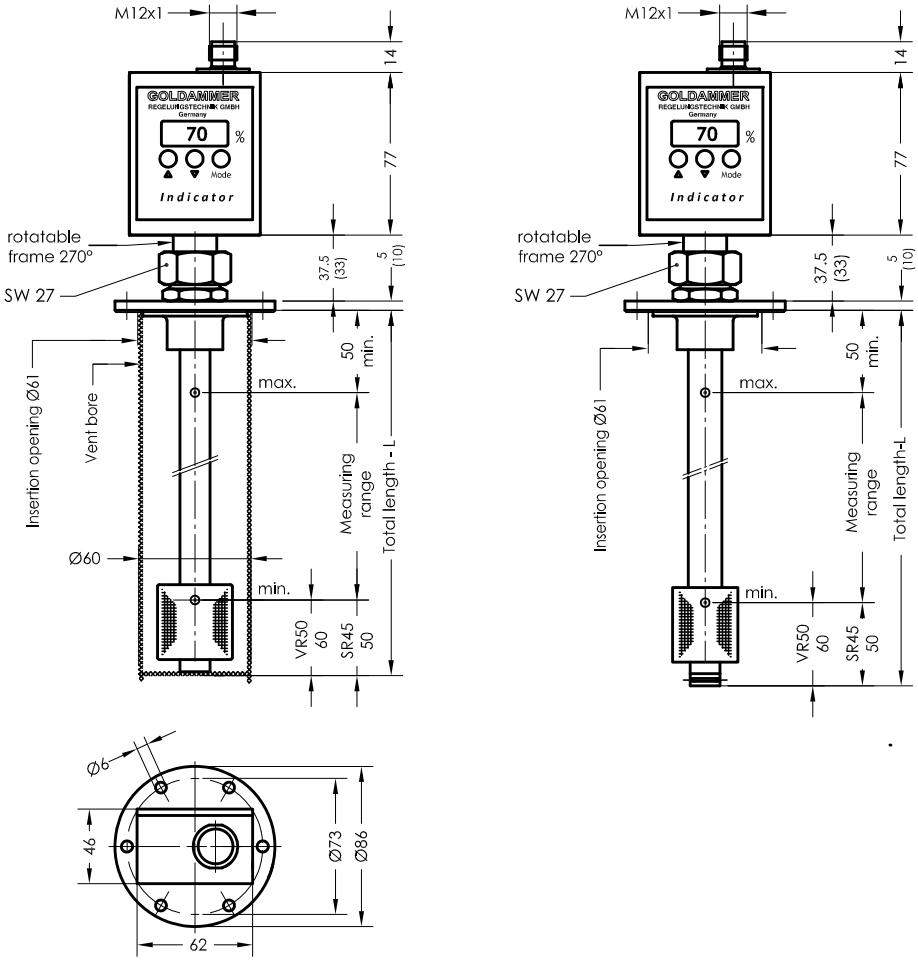

Flange 85
according to DIN24557 part 2

Pin assighnment

Plug securing

1 = +12V-30V DC
3 = GND - Indication
4 = level L1 PNP
2 = level L2 PNP
5 = level L3 PNP

PNP Output freely programmable

Order code

Specimen order

NR85 - S - L - 2 - SR45 - L250 - L3 - MS - 1M12

Tank connection:
NR85 - L max. 2000mm

O = without protective tube
S = with protective tube

Float type
SR45
VR50

Total length-L
switching tube (mm)
standard length
L=250 L=800
L=370 L=1000
L=500 L=1200

Level output
L1
L2
L3

Execution
MS = Brass
VA = Flange, Protective tube, Switching tube and float stainless steel

Technical data

Description

The level - controller type Indicator - L - 2 is a contactless operating magnetic switch and is used for continuous monitoring and control of liquids. It contains a resistance measuring chain. The level - dependent signals are transformed in the control unit.

Level monitoring and control is by means of an electronic circuit with an LED display that indicates the actual values from 0-100%
The level switching points are adjusted by means of three buttons fitted on the control unit.

The level switching points and switching function (make / break) can be regulated while the start-up.

The level controller is maintenance-free when nondeposit media are used.

The device must only be installed by specialists.

Other temperature ranges on request.

Technical data

Protective tube	Stainless steel
Switch tube	Brass, stainless steel
Tank connection	Polyamid or stainless steel with flat seal
Nominal pressure	1 bar max. / VR50 10 bar max.
Temperature of medium	Polycarbonate, IP67
Cabinet	100°C max.
Float	Hard PU, VR50 stainless steel
Connection	M12 series IP67 - male connector
Operating voltage	12V ... 30V DC
Level contacts	3 PNP
Contact grid	7.5 mm
Display	LED 3-digit 0 bis 100%
Switching current	1A max.
Mounting position	vertical ± 30°
*Indicator	Sheet IND-GB

GOLDAMMER
REGELUNGSTECHNIK GMBH
SCHÖLLERSHEIDER STR. 15 PHONE (49) 2104/12093
P.O.BOX 10 02 17 FAX (49) 2104/12028
D-40802 METTMANN www.Goldammer-Regelungstechnik.com

Indicator - L - 2 - 150°C max

Level controller with PNP level switching outputs
LED level display

serial No. Date
IND-GB- 112-1 03/18

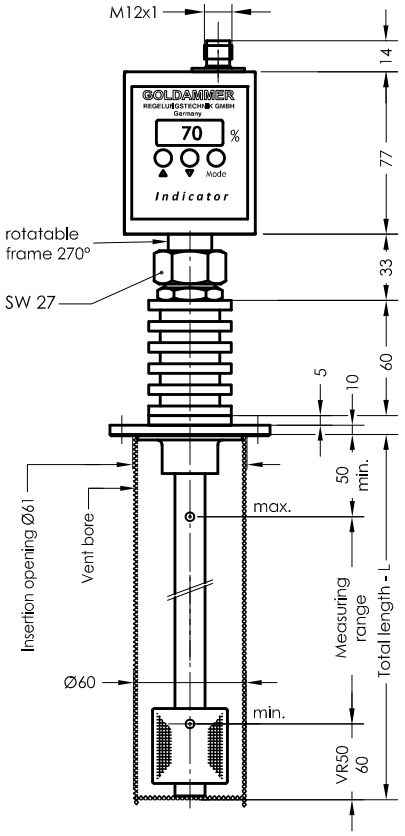

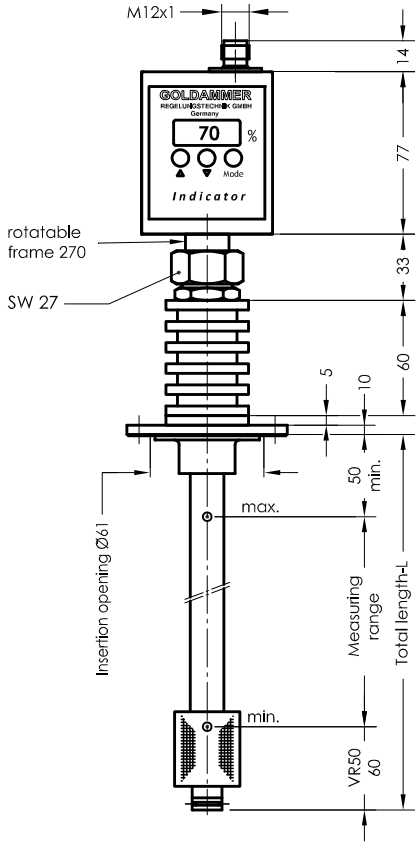

Pin assignment

Plug securing

1 = +12V-30V DC
3 = GND - Indication
4 = level L1 PNP
2 = level L2 PNP
5 = level L3 PNP

PNP Output freely programmable

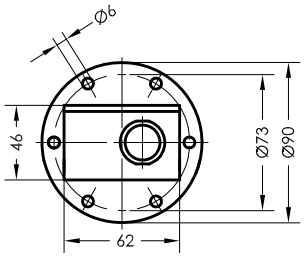

Flansch 85
according to DIN24557 part 2

Order code

Specimen order
NR85-S-L-2-VR50-L250-VA-L3-150°C-1M12

Tank connector
NR85-L max. 2000mm

O = without Protective tube
S = with Protective tube

Float type
VR50

Total length-L
switching tube (mm)
standard length
L=250 L=800
L=370 L=1000
L=500 L=1200

Level output
L1
L2
L3

Execution
VA = Flange, Protective tube, Switch tube and float stainless steel

Technical data

Description

The level - controller type Indicator-L-2-150°C max is a contactless operating magnetic switch and is used for continuous monitoring and control of liquids. It contains a resistance measuring chain. The level - dependent signals are transformed in the control unit.

Level monitoring and control is by means of an electronic circuit with an LED display that indicates the actual values from 0-100%
The level switching points are adjusted by means of three buttons fitted on the control unit.
The level switching points and switching function (make / break) can be regulated while the start-up.

The level controller is maintenance-free when nondeposit media are used.
The circulation of air of cooling fins must be ensured.

The device must only be installed by specialists.

Technical data

Protective tube	Stainless steel
Switch tube	Stainless steel
Tank connection	Stainless steel with flat seal Viton
Nominal pressure	1 bar max.
Temperature of medium	150°C max.
Cabinet	Polycarbonate, IP67
Float	VR50 stainless steel
Connection	M12 IP67 series - male connector
Operating voltage	12V ... 30V DC
Level contacts	3 PNP
Contact grid	7.5 mm
Display	LED 3-digit 0 bis 100%
Switching current	1A max.
Mounting position	vertical ± 30°
*Thermal contact	Sheet TR-GB-507
*Indicator	Sheet IND-GB

GOLDAMMER
REGELUNGSTECHNIK GMBH
SCHÖLLERSHEIDER STR. 15
P.O.BOX 10 02 17
D-40802 METTMANN
PHONE (49) 2104/12093
FAX (49) 2104/12028
www.Goldammer-Regelungstechnik.com

Indicator - L - 2 - R

Level controller with 3 PNP level switching outputs and LED level display

serial No.	Date
IND-GB- 113	03/18

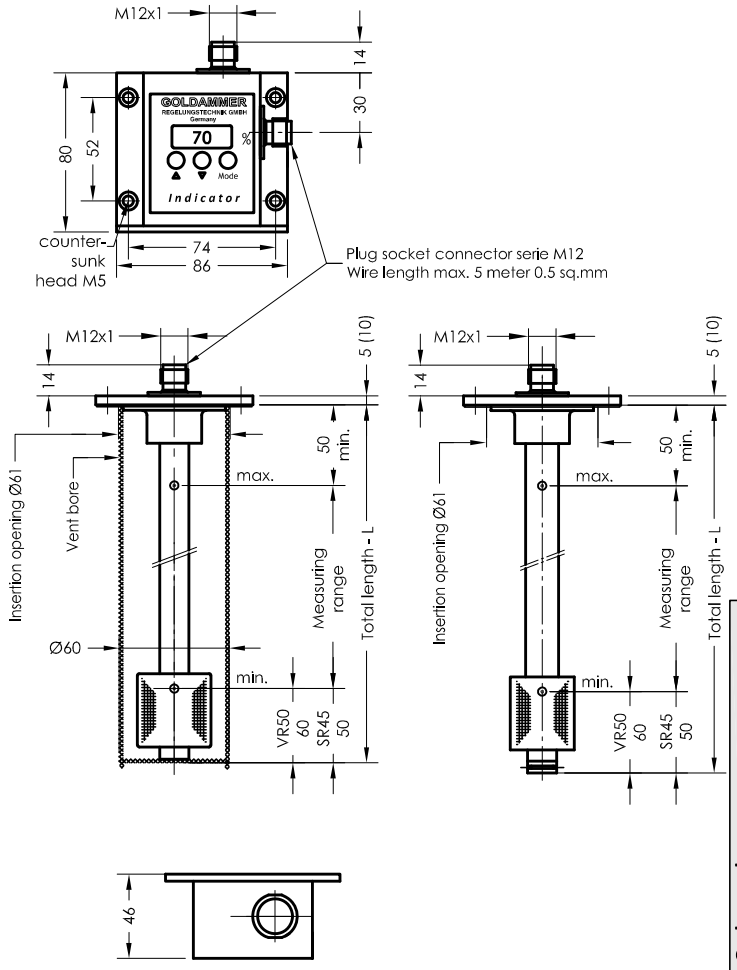

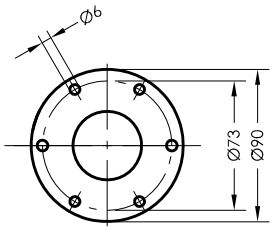

Flansge 85
according to DIN24557 part 2

Pin assignment

Plug securing

1 = +12V-30V DC
3 = GND - Indication
4 = level L1 PNP
2 = level L2 PNP
5 = level L3 PNP

PNP Output freely programmable

Plug securing

Order code

Specimen order

NR85-S-L-2-R-SR45-L250-L3-MS-3M12

Tank connector:
NR 85 - L max. 2000mm

O = without Protective tube
S = with Protective tube

Float type
SR45
VR50

Total length-L
switching tube (mm)
standard length
L= 280 L= 800
L= 370 L= 1000
L= 500 L= 1200

Level output
L1
L2
L3

Execution
MS = Brass
VA = Flange, Protective tube, Switching tube and float stainless steel

Equipment

Art. Nr. 50100080 - connecting wire circuit serie M12 with 2 cable sockets 5-pole length 3m
Art. Nr. 50100076 - connecting wire circuit serie M12 with 2 cable sockets 5-pole length 5m
Other length available on request

Technical data

Description

The level - controller type Indicator - L - 2 (remote installation) is a contactless operating magnetic switch and is used for continuous monitoring and control of liquids. It contains a resistance measuring chain. The level - dependent signals are transformed in the control unit.

Level monitoring and control is by means of an electronic circuit with an LED display that indicates the actual values from 0-100%
The level switching points are adjusted by means of three buttons fitted on the control unit.
The level switching points and switching function (make / break) can be regulated while the start-up.

The level controller is maintenance-free when nondeposit media are used.

The device must only be installed by specialists.

Other temperature ranges on request.

Technical data

Protective tube	Stainless steel
Switch tube	Brass, stainless steel
Tank connection:	Polyamid or stainless steel with flat seal
Nominal pressure	1 bar max. / VR50 10 bar max.
Temperature of medium	100°C max.
Cabinet	Polycarbonate, IP67
Float	Hard PU, VR50 stainless steel
Connection	M12 IP67 series - male connector
Operating voltage	12V ... 30V DC
Level contacts	3 PNP
Contact grid	7.5 mm
Display	LED 3-digit 0 bis 100%
Switching current	1A max.
Mounting position	vertical ± 30°
*Indicator	Sheet IND-GB

GOLDAMMER
REGELUNGSTECHNIK GMBH
SCHÖLLERSHEIDER STR. 15
P.O.BOX 10 02 17
D-40802 METTMANN
PHONE (49) 2104/12093
FAX (49) 2104/12028
www.Goldammer-Regelungstechnik.com

Indicator - L - 2 - R - 150° max (remote installation)

Level controller with 3 PNP level switching outputs and LED level display

serial No. Date
IND-GB- 113-1 03/18

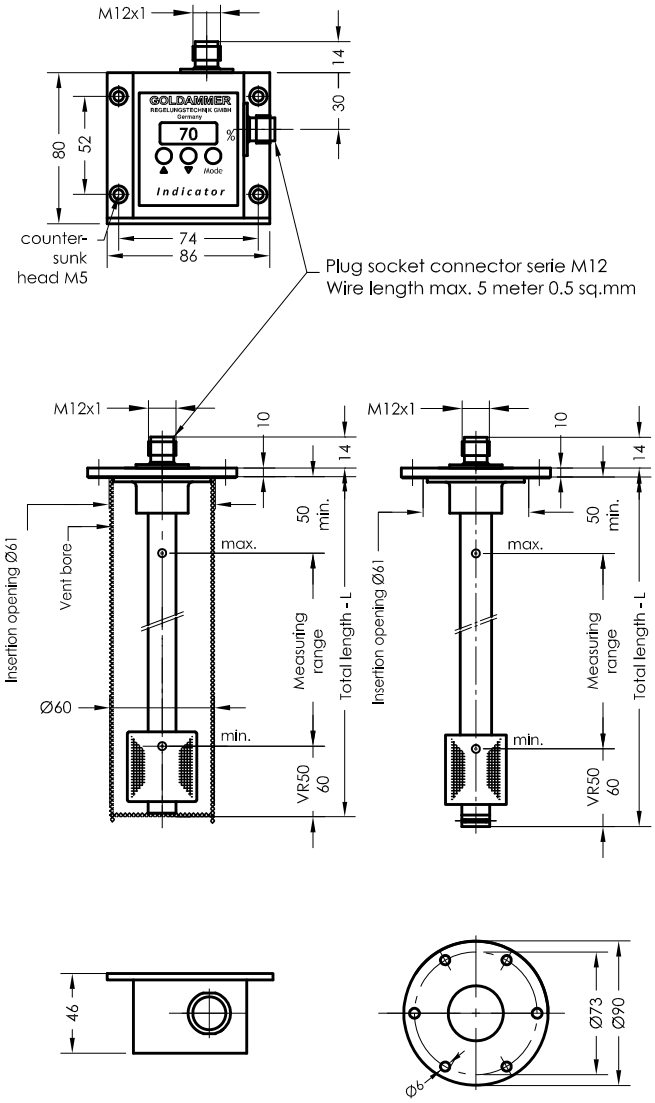

Flange 85
according to
DIN24557 part 2

Pin assignment

Plug securing

1 = +12V-30V DC
3 = GND - Indication
4 = level L1 PNP
2 = level L2 PNP
5 = level L3 PNP

PNP Output freely programmable

Plug securing

Order code

Specimen order

NR85-S-L-2-R-VR50-L250-VA-L3-150°C-3M12

Tank connector:
NR85-L max. 2000mm

O = without Protective tube
S = with Protective tube

Float type
VR50

Total length-L
switching tube (mm)
standard length
L= 280 L= 800
L= 370 L= 1000
L= 500 L= 1200

Level output
L1
L2
L3

Execution
VA = Flange,
Protective tube,
Switch tube
and float
stainless steel

Equipment

Art. Nr. 50100080 - connecting wire circuit serie M12 with 2 cable sockets 5-pole length 3m
Art. Nr. 50100076 - connecting wire circuit serie M12 with 2 cable sockets 5-pole length 5m
Other length available on request

Technical data

Description

The level - controller type Indicator-L-2-R-150° max (remote installation) is a contactless operating magnetic switch and is used for continuous monitoring and control of liquids. It contains a resistance measuring chain. The level - dependent signals are transformed in the control unit.

Level monitoring and control is by means of an electronic circuit with an LED display that indicates the actual values from 0-100%
The level switching points are adjusted by means of three buttons fitted on the control unit.
The level switching points and switching function (make / break) can be regulated while the start-up.

The level controller is maintenance-free when nondeposit media are used.

The circulation of air of cooling fins must be ensured.

The device must only be installed by specialists.

Technical data

Protective tube	Stainless steel
Switch tube	Stainless steel
Tank connection	Stainless steel with flat seal Viton
Nominal pressure	1 bar max.
Temperature of medium	150°C max.
Cabinet	Polycarbonate, IP67
Float	VR50 stainless steel
Connection	M12 IP67 series - male connector
Operating voltage	12V ... 30V DC
Level contacts	3 PNP
Contact grid	7.5 mm
Display	LED 3-digit 0 - 200°C
Switching current	1A max.
Mounting position	vertical ± 30°
*Indicator	Sheet IND-GB

GOLDAMMER
REGELUNGSTECHNIK GMBH
SCHÖLLERSHEIDER STR. 15 PHONE (49) 2104/12093
P.O.BOX 10 02 17 FAX (49) 2104/12028
D-40802 METTMANN www.Goldammer-Regelungstechnik.com

Level-temperature-capillary tube-regulator

serie NT

- different tank connections available
- with fixed or adjustable level contacts
- 1 - 4 adjustable thermostats
- optional explosion-proof version with 2 adjustable thermostats
- optional with temperature monitoring
- optional with fixed contact as safety contact

NTR ... - K

Level - Temperature - Capillary tube - Regulator

serial No. Date
NT-GB- 400 04/19

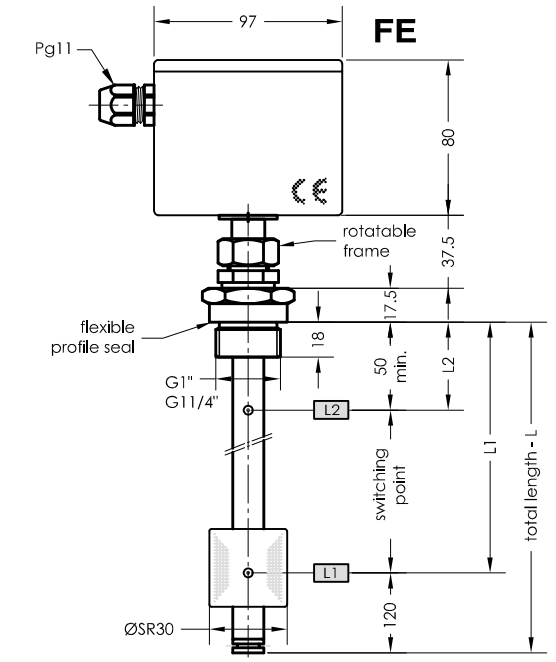

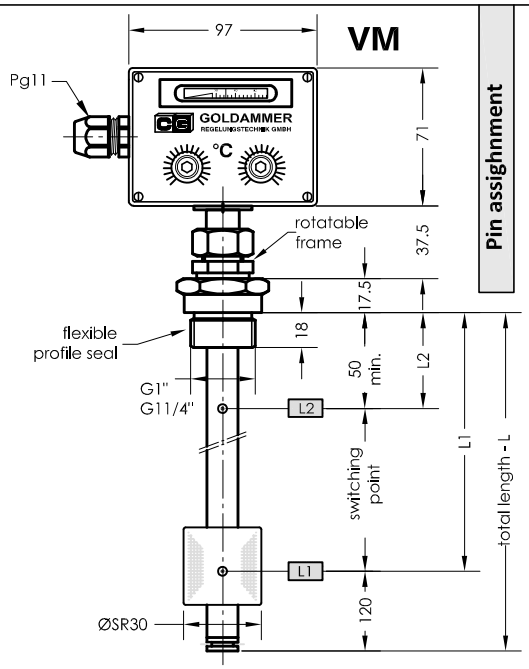

Pin assignment

Terminal diagram

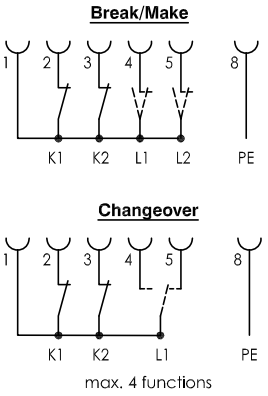

Function tank empty

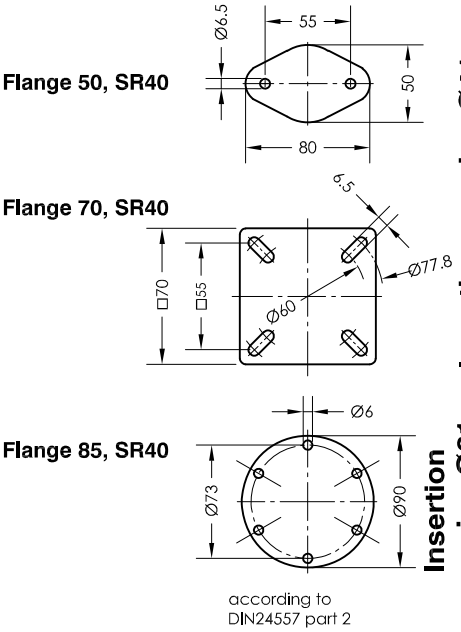

Order code

Specimen order

NTR 50-SR40-K2-A-FE-L370-01-L1/250/S-T70Ö - I

Connection
G1" 50 70
G11/4" 85

Float
SR30
SR40

Temperature
K1= 1 contact
K2= 2 contacts

A= indication of actual temperature
O= without indication

Construction
FE= permanent installation
VM= vertical installation

Total length (mm)

Pt100
Thermal contact
T10Ö
T40Ö
T50Ö
T60Ö (S)
T70Ö (S) (Ö preferred)
T80Ö (S)
T90Ö
(Indicate T1... - T2... for two thermal contacts)

Switching point L1-L3/ mm from sealing edge
Ö = break
S = make
Function with increasing level

Level contact type
01 = fixed, plain
02 = fixed, changeover

I =0 to 120°C

Technical data

Description

The level - temperature - capillary tube - regulator NTR ... K for tank insert is a combined unit for level and temperature regulation.

To monitor the level, the switching tube contains bistable level contacts are fixed in position. The permanent magnet built into the float switches the contacts when the level changes. The switching difference (hysteresis) is 4mm. The temperature is regulated with the capillary tube device. It operates on the principle of liquid expansion. The thermal probes are located in the lower half of the switching tube. A maximum of 2 temperature contacts, adjustable from 0 to 120°C
(-10 to 80°C), and an actual temperature display can be incorporated. For temperature monitoring and regulation, thermal elements such as Pt100 and thermal contacts can be additionally incorporated. The cable connections are made with series terminals of 1,5 mm².
For inductive loads, a protective circuit must be provided (free-wheeling diode/RC element).
The device must only be installed by specialists.

With optional plug socket connector DIN 43650, 6 pol+PE IP65 or serie M12 IP67.

Technical data

Switching tube	Brass, max. L = 1000mm
Switch cabinet	PC, IP65
electric. connection	Cable thread Pg11 + series terminals 1,5mm², tightening torque SEV 0,5Nm max.
Tank connection	optional, with seal
Nominal pressure	1 bar max.
Temp.of medium	100 °C max.
Float	Hard Pu SR30, SR40
Level contacts	bistable, Datasheet IN - GB - 003(004)
Temperature contacts	bistable, Datasheet IN - GB - 003(004)
Temperature range	0 to 120°C, adjustable
Temperature display	0 to 120°C ±3°
Switching accuracy	±5k
Switching difference	5k±1k
Thermal elements	Pt100, thermal contact
Number of functions	max. 5 can be incorporated
Mounting position	vertical ± 30°
*Thermal contact	Sheet TR-GB-507

GOLDAMMER
REGELUNGSTECHNIK GMBH
SCHÖLLERSHEIDER STR. 15 PHONE (49) 2104/12093
P.O.BOX 10 02 17 FAX (49) 2104/12028
D-40802 METTMANN www.Goldammer-Regelungstechnik.com

NTR ... - K - SR45 / VR50

Level - Temperature - Capillary tube - Regulator

serial No. Date
NT-GB- 400a 08/18

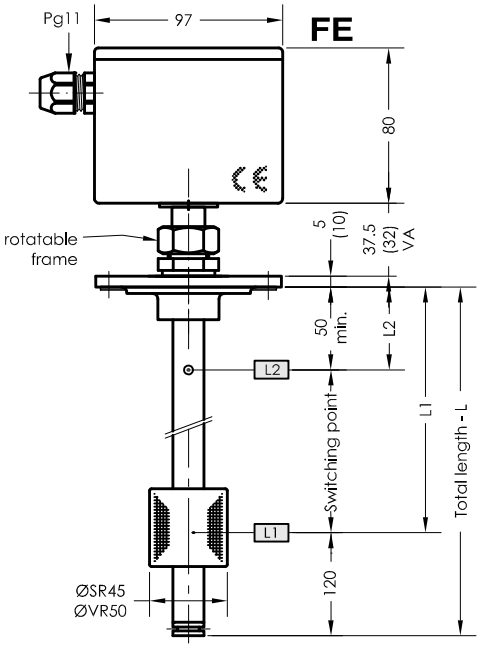

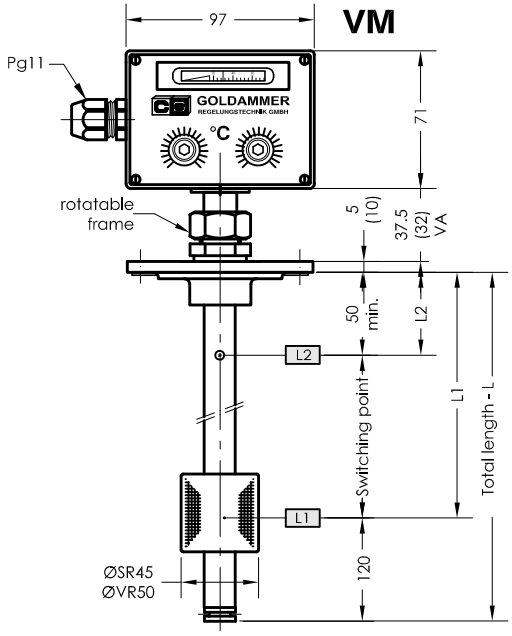

Pin assignment

Terminal diagram

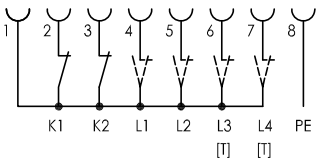

Function tank empty

Flange 70

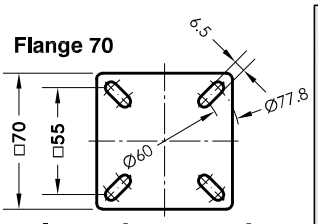

Insertion opening Ø46/52

Flange 85available with protective tube

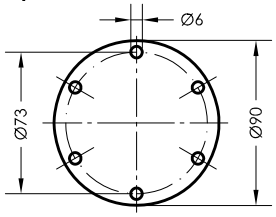

according to DIN24557 part 2

Insertion opening Ø61

Order code

Specimen order

NTR 85-S-SR45-K2-A-FE-L370-03-L1/250/S-T70Ö-I-MS-24V

Connection
70
85
O = without protective tube
S = with protective tube

Float type
SR45
VR50

Temperature
K1= 1 contact
K2= 2 contacts

A= indication of actual temperature
O= without indication

Construction
FE= permanent installation
VM= vertical installation

Total length (mm)

Switching point L1-L3/ mm from sealing edge
Ö = break
S = make
Function with increasing level

Pt100
Thermal contact
T10Ö
T40Ö
T50Ö
T60Ö (S)
T70Ö (S) (Ö preferred)
T80Ö (S)
T90Ö
(Indicate T1... - T2... for two thermal contacts)

Level contact type
01 = fixed, plain
03 = adjustable, plain

I =0 to 120°C

Operating voltage
VDC 10-36 = 24V
VAC 10-230 = 230V

Execution
MS = Brass
VA = Flange, Protective tube, Switching tube and float stainless steel

Technical data

Description

The level - temperature - capillary tube - regulator NTR ... K for tank insert is a combined unit for level and temperature regulation.
To monitor the level, the switching tube contains fixed or adjustably bistable contact cartridges mounted on a perforated strip. The permanent magnet built into the float switches the contacts when the level changes. The switching difference (hysteresis) is 4mm.
The temperature is regulated with the capillary tube device. It operates on the principle of liquid expansion. The thermal probes are located in the lower half of the switching tube. A maximum of 2 temperature contacts, adjustable from 0 to 120°C and an actual temperature display can be incorporated. For temperature monitoring and regulation, thermal elements such as Pt100 and thermal contacts can be additionally incorporated. The cable connections are made with series terminals of 1,5 mm².
For inductive loads, a protective circuit must be provided (free-wheeling diode/RC element).
The device must only be installed by specialists.

With optional plug socket connector DIN 43650, 6 pol.+PE IP65 and serie M12 IP67.

Max. Viscosity 100 mm²/s / 320mm²/s

Technical data

Protective tube	Steinless Steel
Switching tube	Brass, max. L = 1000mm
Switch cabinet	PC, IP65
electric. connection	Cable thread Pg11 + series terminals 1,5mm², tightening torque SEV 0,5Nm max.
Tank connection	optional, with seal
Nominal pressure	1 bar max. /VR 50 10 bar max.
Temp.of medium	100 °C max.
Float	Hard Pu SR45, stainless steel VR50
Level contacts	bistable,adjustable, Datasheet IN - GB - 003
Temperature contacts	Datasheet IN - GB - 003. M12 24V - 4A
Temperature range	0 to 120°C, adjustable
Temperature display	0 to 120°C ±3°
Switching accuracy	±5k
Switching difference	5k±1k
Thermal elements	Pt100, thermal contact
Number of functions	max. 6 can be incorporated
Mounting position	vertical ± 30°
*Thermal contact	Sheet TR-GB-507

GOLDAMMER
REGELUNGSTECHNIK GMBH
SCHÖLLERSHEIDER STR. 15
P.O.BOX 10 02 17
D-40802 METTMANN
PHONE (49) 2104/12093
FAX (49) 2104/12028
www.Goldammer-Regelungstechnik.com

NTR ... - K3 / K4

Level - Temperature - Capillary tube - Regulator

serial No. Date
NT-GB- 400b 01/19

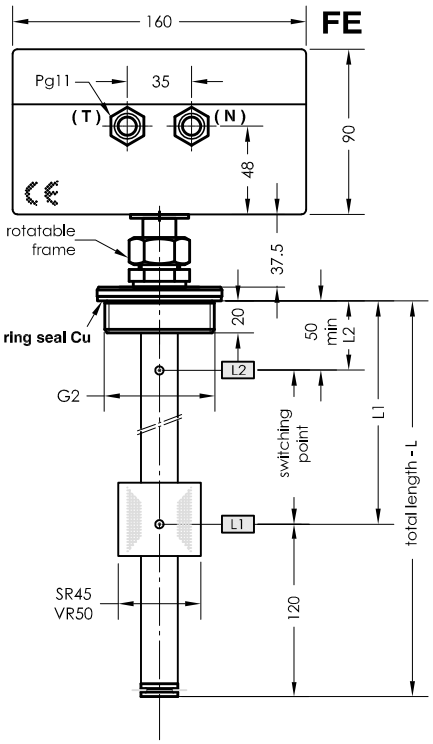

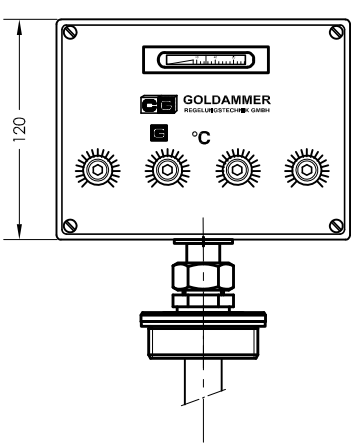

Pin assignment

Terminal diagram

Break/Make

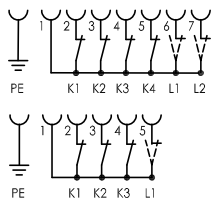

Changeover

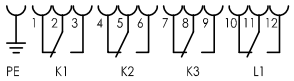

Function tank empty

M12

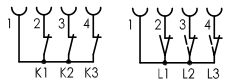

(T) Temperature **(N) Level**

Order code

Specimen order

NTR 70 -SR45-K3-A-FE-L370-01-L1/250/S-T70Ö- I-VA-M12

Connection
G2
70
85

Float type
SR45
VR50

Temperature
K3= 3 contact
K4= 4 contacts

A= indication of actual temperature
O= without indication

Switching point L1-L3/ mm from sealing edge
Ö = break
S = make
W= changeover
Function with increasing level

Level contact type
01 = fixed, plain
02 = fixed, changeover
03 = adjustable, plain

Total length (mm)

Construction
FE= permanent installation
VM= vertical installation

Execution
MS = Brass
VA = stainless steel

Plug socket connector
DIN 43651
2 x M12
Cable thread Pg11

I =0 to 120°C

Pt100
Thermal contact
T10Ö
T40Ö
T50Ö
T60Ö (S) (Ö
T70Ö (S) preferred)
T80Ö (S)
T90Ö
(Indicate T1... - T2... for two thermal contacts)

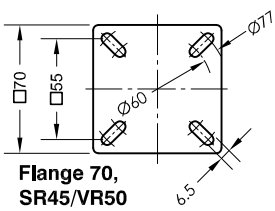

Flange 70, SR45/VR50

Insertion opening Ø46/52

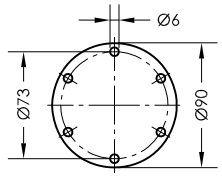

Flange 85, SR45/VR50
according to DIN24557 part 2

Insertion opening Ø61

Connector variants

DIN 43651
(EN 175201-804)
6+PE
IP 65

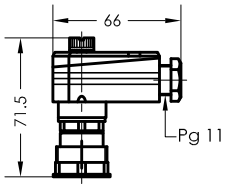

Serie M12
IP 67

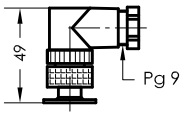

Cable thread Pg11

Technical data

Description

The level - temperature - capillary tube - regulator NTR ... K3 / K4 for tank insert is a combined unit for level and temperature regulation.
To monitor the level, the switching tube contains bistable level contacts. They may be fixed or alternatively mounted as an adjustable contact cartridge on a perforated strip. The permanent magnet built into the float switches the contacts when the level changes. The switching difference (hysteresis) is 4mm. The temperature is regulated with the capillary tube device. It operates on the principle of liquid expansion. The thermal probes are located in the lower half of the switching tube. A maximum of 4 temperature contacts, adjustable from 0 to 120°C and an actual temperature display for 0 to 120°C can be incorporated. For temperature monitoring and regulation, thermal elements such as Pt100 and thermal contacts can be additionally incorporated. The cable connections are made with series terminals of 1,5 mm².
For inductive loads, a protective circuit must be provided (free-wheeling diode/RC element).
The device must only be installed by specialists.

With optional plug socket connector 6 pol.+PE IP65 or serie M12 IP67. Max. Viscosity ISO VG 100/320

Technical data

Switching tube	Brass, max. L = 1000mm
Switch cabinet	PC, IP65
Electric. connection	Cable thread Pg11 + series terminals 1,5mm², Tightening torque SEV 0,5Nm max.
Plug socket connector	DIN 43651 IP65 or serie M12 IP67
Tank connection	optional, with seal
Nominal pressure	1 bar max. VR 50 10bar max.
Temp.of medium	100 °C max.
Float	Hard Pu SR45, stainless steel VR50
Level contacts	bistable make/break/changeover
Switching current	Datasheet IN - GB - 003(004)
Switching potential	Datasheet IN - GB - 003(004)
Temperature contacts	Datasheet IN - GB -003(004), M12 24V - 4A
Temperature range	0 to 120°C, adjustable
Temperature display	0 to 120°C ±3°
Switching accuracy	±5k
Switching difference	5k±1k
Thermal elements	Pt100, thermal contact
Number of functions	max. 6 can be incorporated
Mounting position	Vertical ± 30°
*Thermal contact	Sheet TR-GB-507

GOLDAMMER
REGELUNGSTECHNIK GMBH
SCHÖLLERSHEIDER STR. 15 PHONE (49) 2104/12093
P.O.BOX 10 02 17 FAX (49) 2104/12028
D-40802 METTMANN www.Goldammer-Regelungstechnik.com

NTR 1/2" - 3/4" - M20 - M24

Level - Temperature - Capillary tube - Regulator

serial No. Date
NT-GB- 400-1 12/18

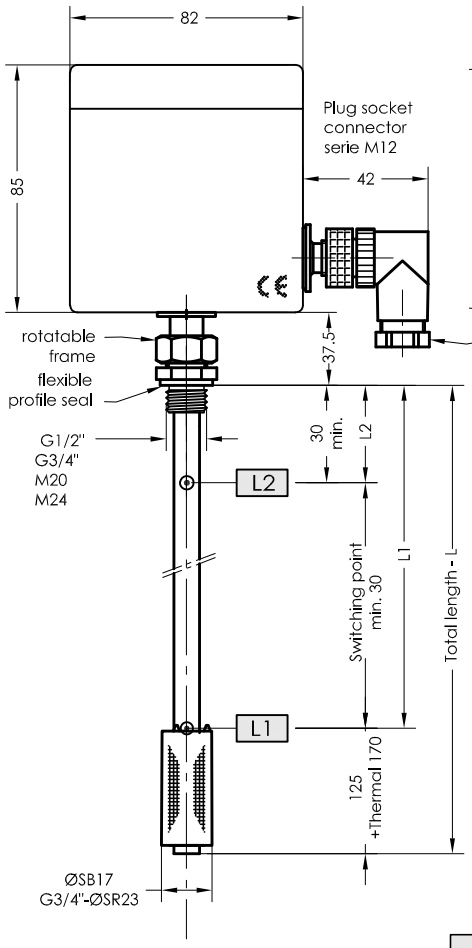

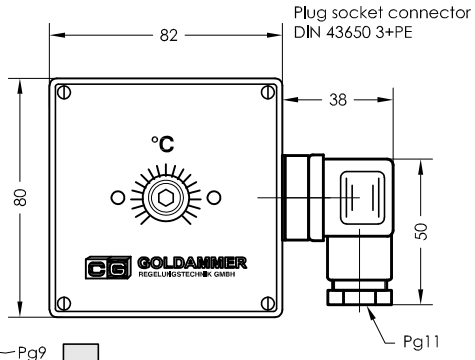

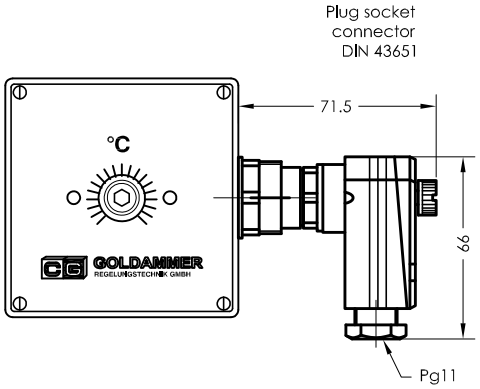

Pin assignment

Terminal diagram

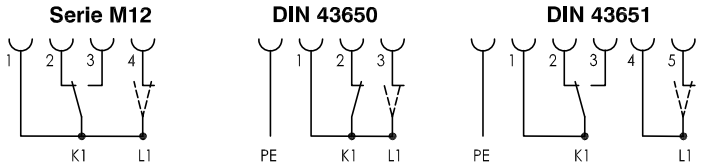

Function under switching temperature

Order code

Specimen order

NTR 1/2" - K1 - L470 - 01 - L1/300/S - M12

Connection
1/2"
3/4"
M20
M24

Temperature
K1= 1 contact

Total length (mm)

Level contact type
01 = fixed, plain

Switching point L1-L2/ mm from sealing edge
Ö = break
S = make
Function with increasing level

Plug socket connector
3+PE
DIN 43651
M12

Technical data

Description

The level - temperature - capillary tube - regulator NTR 1/2"-3/4"-M20-M24 for tank insert is a combined unit for level and temperature regulation.
To monitor the level, the switching tube contains bistable level contacts which are installed in a fixed position. The permanent magnet built into the float switches the contacts when the level changes. The switching difference (hysteresis) is 4mm. The temperature is regulated with the capillary tube device, according to the principle of liquid expansion. The thermal probes are located in the lower half of the switching tube.
As maximum 1 regulator, adjustable from -10 to 80°C, optional also with a thermal contact as fixed contact for example T60Ö available, can be incorporated.
For inductive loads, a protective circuit must be provided (free-wheeling diode/RC element).

The device must only be installed by specialists.

Max. Viscosity 150mm²/S

Technical data

Switching tube	Brass, max.L = 500mm
Connection	Brass G1/2" SW27 Brass G3/4" SW32 Brass M20 x 1,5 Brass M24 x 1,5
Operating pressure	1 bar max.
Temperature of medium	80°C max.
Float	Plastic, type SB17 / SR23
Level contacts	Make/break contacts
Temperature range	-10-80°C, adjustable
Switching accuracy	±5k
Switching difference	5k±1k
Plug socket connector	DIN 43650 3+PE or DIN 43651 IP65 or serie M12/4/5 IP67
Operating voltage	230V max. / serie M12 - 24V
Switching current	Datasheet IN - GB - 003
Number of functions	max. 2 can be incorporated
Mounting position	vertical ± 30°

GOLDAMMER
REGELUNGSTECHNIK GMBH
SCHÖLLERSHEIDER STR. 15 PHONE (49) 2104/12093
P.O.BOX 10 02 17 FAX (49) 2104/12028
D-40802 METTMANN www.Goldammer-Regelungstechnik.com

NTR ... - T - Connector

Level - Temperature - Capillary tube - Regulator

serial No. Date
NT-GB- 400/2 04/19

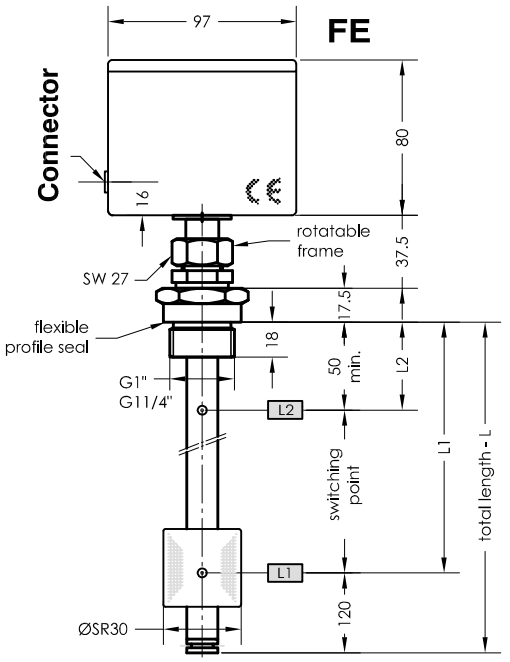

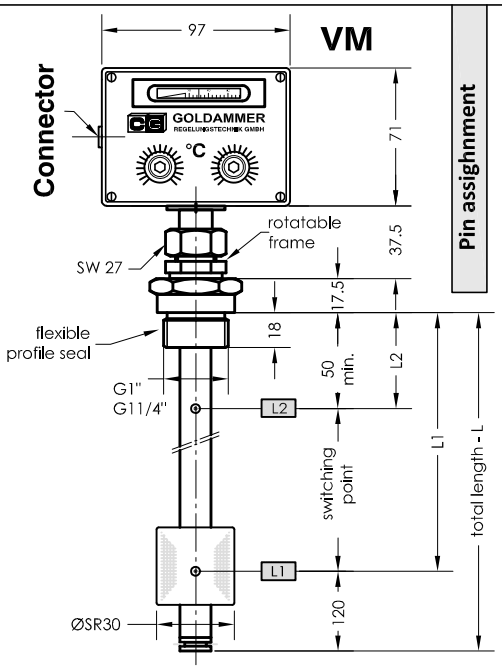

Pin assignment

Terminal diagram

Break/Make

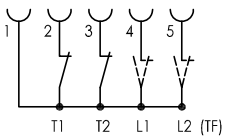

function container empty

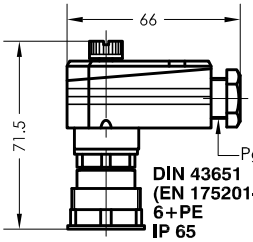

DIN 43651 (EN 175201-804) 6+PE IP 65

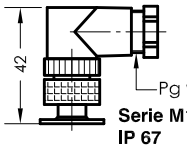

Serie M12 IP 67

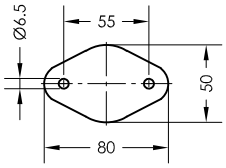

Flange 50, SR40

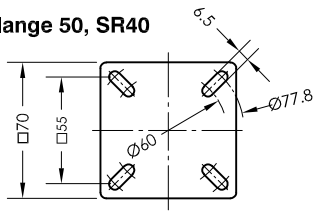

Flange 70, SR40, SR45

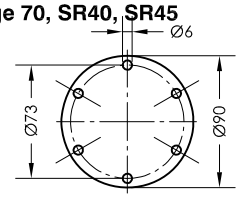

Flange 85, SR40 according to DIN24557 part 2

Insertion opening Ø41

Insertion opening Ø61

Order code

Specimen order

NTR 50-SR40-T2-A-FE-L370-01-L1/250/S-T70Ö- III- M12

Connection
G1" 50 70
G11/4" 85

Float
SR30
SR40
SR45

Temperature
T1= 1 contact
T2= 2 contacts

A= indication of actual temperature
O= without indication

Construction
FE= permanent installation
VM= vertical installation

Total length (mm)

Pt100
Thermal contact
T10Ö
T40Ö
T50Ö
T60Ö (S)
T70Ö (S) (Ö preferred)
T80Ö (S)
T90Ö
(Indicate T1... - T2... for two thermal contacts)

Switching point L1-L3/ mm from sealing edge
Ö = break
S = make
Function with increasing level

Level contact type
01 = fixed, plain
02 = fixed, changeover
III = -10 to 80°C

Plug socket connector DIN 43651 M12

Technical data

Description

The level - temperature - capillary tube - regulator NTR ... K for tank insert is a combined unit for level and temperature regulation.

To monitor the level, the switching tube contains bistable level contacts are fixed in position. The permanent magnet built into the float switches the contacts when the level changes. The switching difference (hysteresis) is 4mm. The temperature is regulated with the capillary tube device. It operates on the principle of liquid expansion. The thermal probes are located in the lower half of the switching tube. A maximum of 2 temperature contacts, adjustable from -10 to 80°C and an actual temperature display can be incorporated. For temperature monitoring and regulation, thermal elements such as Pt100 and thermal contacts can be additionally incorporated. The cable connections are made with series terminals of 1,5 mm².
For inductive loads, a protective circuit must be provided (free-wheeling diode/RC element).
The device must only be installed by specialists.

Technical data

Switching tube	Brass, max. L = 1000mm
Switch cabinet	PC, IP65
electric. connection	DIN 43651 IP65, M12 IP67
Tank connection	optional, with seal
Nominal pressure	1 bar max.
Temp.of medium	100 °C max.
Float	Hard Pu SR30, SR40,SR45
Level contacts	bistable, Datasheet IN - GB - 003(004)
Temperature contacts	bistable, Datasheet IN - GB - 003(004)
Temperature range	-10 to 80°C, adjustable
Temperature display	0 to 120°C ±3°
Switching accuracy	±5k
Switching difference	5k±1k
Thermal elements	Pt100, thermal contact (TF)
Number of functions	max. 5 can be incorporated
Mounting position	vertical ± 30°
*Thermal contact	Sheet TR-GB-507

GOLDAMMER
REGELUNGSTECHNIK GMBH
SCHÖLLERSHEIDER STR. 15 PHONE (49) 2104/12093
P.O.BOX 10 02 17 FAX (49) 2104/12028
D-40802 METTMANN www.Goldammer-Regelungstechnik.com

NTR 1/120 - S - K

Level - Temperature - Capillary tube - Regulator

serial No.	Date
NT-GB- 401	04/19

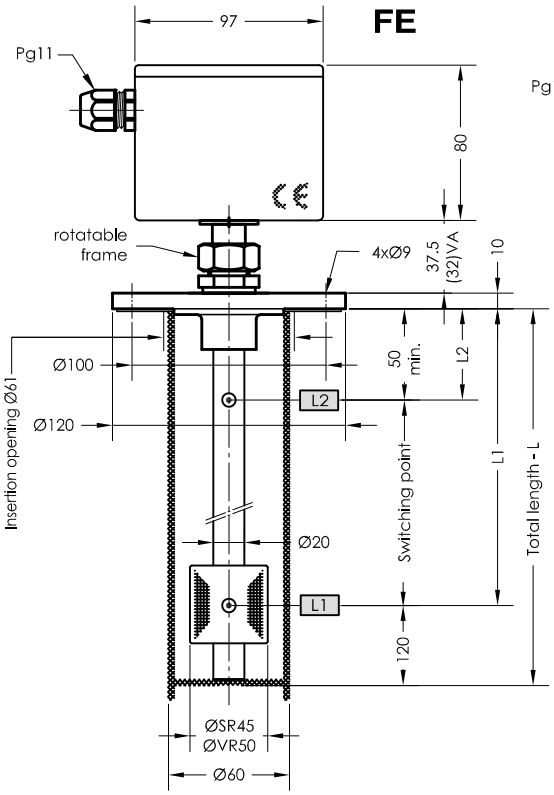

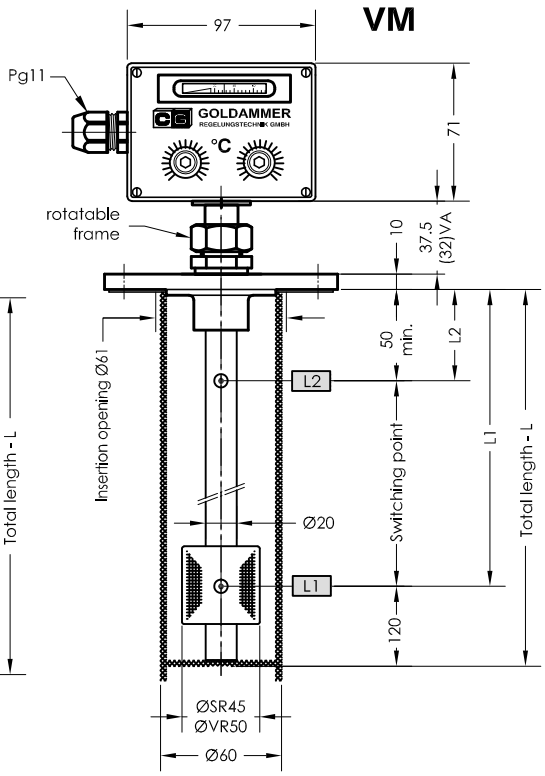

Level contact

-03-

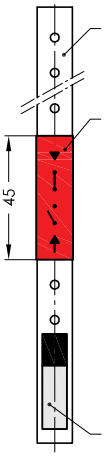

Strip with perforations 10mm

Bistable plain-contact cartridges. The minimum distance between two contact cartridges is 50mm. The make or break function is freely adjustable by 180°-rotation of the contact cartridge.

Thermal element

Pin assignment

Terminal diagram

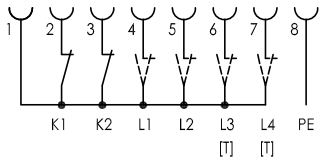

Function tank empty

Order code

Specimen order

NTR 1/120-S-SR45-K2-A-FE-L450-03-L1/300/S - I - MS

O = without protective tube
S = with protective tube

Float type
SR45
VR50

Temperature
K1= 1 contact
K2= 2 contacts

A= indication of actual temperature
O= without indication

Form of installation
FE= permanent installation
VM= vertical installation

Total length-L switching tube (mm)

I =0 to 120°C

Execution
MS = Brass
VA = Flange, Protective tube, Switching tube and float stainless steel

Switching point L1-L3/ mm from sealing edge
Ö = break
S = make

Function with increasing level

Level contact type
01 = fixed plain
03= adjustable, plain

Technical data

Description

The level - temperature - capillary tube - regulator NTR 1/120 - K for tank insert is a combined unit for level and temperature regulation. To monitor the level, the switching tube contains bistable contact cartridges, adjustably mounted on a perforated strip. The permanent magnet built into the float switches the contacts when the level changes. The switching difference (hysteresis) is 4mm. The temperature is regulated with the capillary tube device. It operates on the principle of liquid expansion. The thermal probes are located in the lower half of the switching tube. A maximum of 2 temperature contacts, adjustable from 0 to 120°C and an actual temperature display can be incorporated.
The cable connections are made with series terminals of 1,5mm².

The device must only be installed by specialists.

With optional plug socket connector DIN 43650, 6 pol.+PE IP65 and serie M12 IP67.

Max. viscosity SR 40 / SR45 - 100mm²/S
VR50 - 320 mm²/S

Technical data

Protective tube	Stainless steel
Switching tube	Brass or stainless steel, max. L = 2000mm
Switch cabinet	PC, IP65
electric. connection	Cable thread Pg11 + series terminals 1,5mm², Tightening torque SEV 0,5Nm max.
Connection flange	Stainless steel with seal
Nominal pressure	1 bar max., float Hard-PU SR45 10 bar max., float stainless steel VR50
Temp.of medium	100 °C max.
Level contacts	bistable, fixed, adjustable, Datasheet IN - GB - 003
Temperature contacts	Datasheet IN - GB - 003
Temperature range	0 to 120°C, adjustable
Temperature display	0 to 120°C ±3°
Switching accuracy	±5k
Switching difference	5k±1k
Number of functions	max. 6 can be incorporated
Mounting position	vertical ± 30°

GOLDAMMER
REGELUNGSTECHNIK GMBH

SCHÖLLERSHEIDER STR. 15
P.O.BOX 10 02 17
D-40802 METTMANN

PHONE (49) 2104/12093
FAX (49) 2104/12028
www.Goldammer-Regelungstechnik.com

Temperature-capillary tube-regulator

serie TR

- temperature-capillary tube-regulator with 1-6 adjustable thermostats and optional with temperature display
- temperature transducer with output signal 4-20 mA
- resistance thermometer Pt100 for direct temperature measurement
- temperature monitor with thermal contact
- optional explosion-proof version

TR - G...

Temperature - Capillary tube - Regulator

serial No.	Date
TR-GB- 500	09/16

Permanent installation FE

Remote installation FM

Permanent installation FE

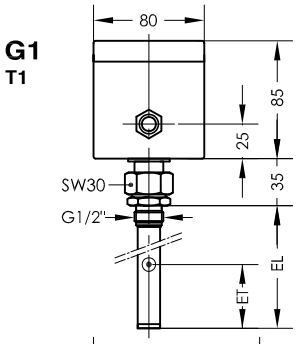

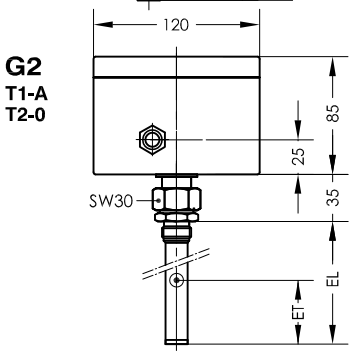

Remote installation FM

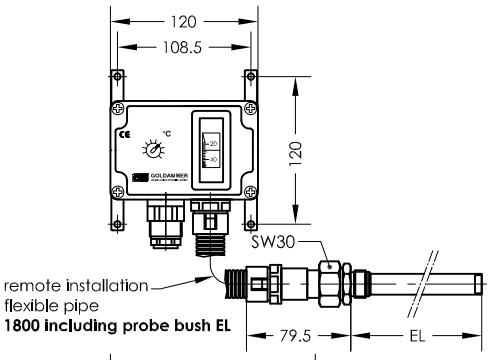

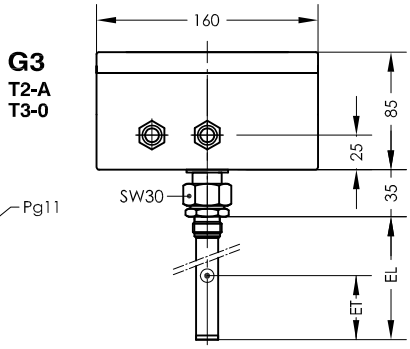

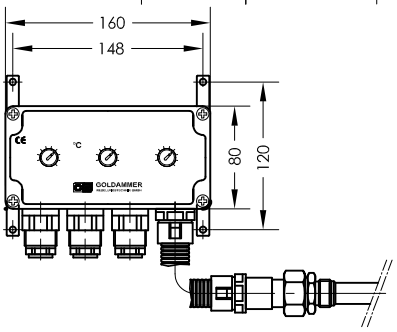

Connector variants

Plug socket connector Serie M12

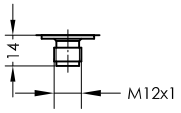

Plug socket connector DIN 43651

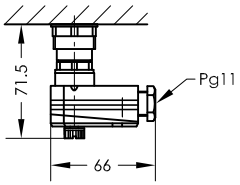

Order code

Specimen order

TR-G3-T2-A-FE-300-III-M12

Size of cabinet
G1
G2
G3
G4

Control thermostats

A = indication of actual temperature
O = without display

FE= permanent installation
FM= remote installation

Plug socket connector
M12
DIN 43651
PG11

I = 0 to 120°C EL max. 500
II = 32 to 248°F EL max. 500
III = 0 to 80°C

EL= length of immersion tube(mm)
300
500
800
1000
1200

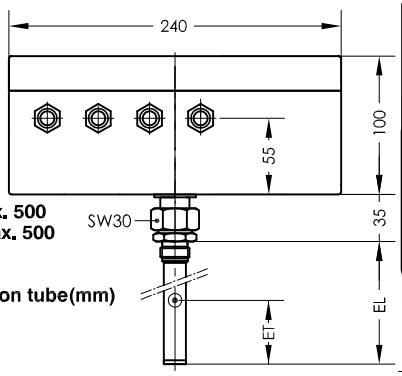

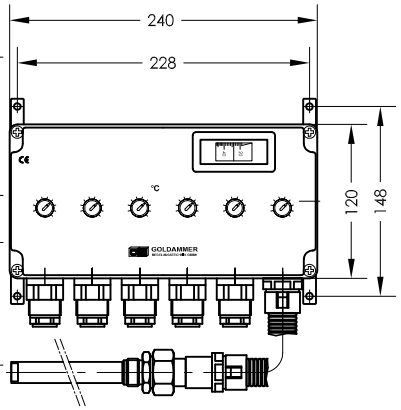

Technical data

Description

The temperature capillary tube regulator TR - G... works on the principle of liquid extension.
A change of temperature in the probe causes a change in volume. This force operates a potential free changeover contact through a membrane.
The desired switching temperatures can be set separatly.
The range lies between 0 and 120 °C (32 to 248°F), (0 to 80°C).
On request the devices will be supplied with a display of actual temperature. The probes are located in an immersion tube.

The device must only be installed by specialists.

Technical data

Switch cabinet	ABS with transparent cover
Protection class	IP 65
Electric. connection	Cable thread Pg11 Plug socket connector Serie M12 IP67 Plug socket connector DIN 43651 IP65
Probe bush	G1/2" stainless steel with resilient jointing
Minimum coverage	1 - 3 functions 100 mm 4 - 5 functions 200 mm 6 functions 300 mm
Operating pressure	16 bar max.
Ambient temperature	-40 to +80°C
Temperature display	0 to 120°C ±3°C
Temperature relay	Changeover cont. max 250V~, 10A min. 5 mA
Temperature range	0 to 80°C, switching difference 5k±1k 0 to 120°C, switching difference 10k±1k
Switching accuracy	±5k

GOLDAMMER
REGELUNGSTECHNIK GMBH

SCHÖLLERSHEIDER STR. 15 PHONE (49) 2104/12093
P.O.BOX 10 02 17 FAX (49) 2104/12028
D-40802 METTMANN www.Goldammer-Regelungstechnik.com

Assembly instruction

Temperature - Capillary tube - Regulator

serial No. Date
acc. Page TR - GB - 500 09/16

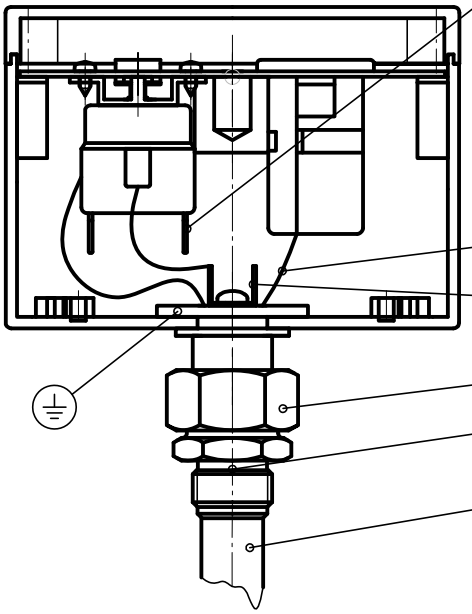

⚠ Caution, do not bend the tab terminal

The flat push-in sleeve of the voltage-carrying connections must be provided with insulating shells.

Do not bend the capilary tubes

PE must be connected

Cap nut

Profile seal

Probe bush

For removing the probe bush turn the cap nut, not the probe bush.

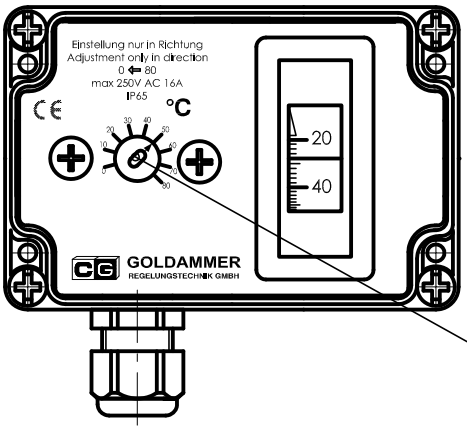

The capilary tubes must not be damaged.

The audible switching tone by maunal actuation of the thermostat disagrees to the scale value

Attention:
Adjustment only in direction
0°C ◄— 80°C(120°C)
with slot screwdriver 4,0x0,8

Temperature-Capillary tube-Regulator TR-G...
Description

The temperature capillary tube regulator type TR-G... serves for the temperature regulation, temperature display and monitoring of hydraulic systems .
It works on the principle of liquid extension.
A temperature change causes a volume change. The switch temperatures are adjustable.
The range lies between 0 to 80 °C or 0 to 120 °C.

Optional the devices will be supplied with temperature display. The sensors are located in the probe bush.

The device must be installed by specialists.

Technical Data

Case:	ABS o.equal with transparent cover
Protection :	IP65
Probe bush :	1.4301
Profile seal :	NBR
Operating pressure :	16 bar max.
Ambient temperature :	-40 bis +80°C
Temperature display :	0 bis 120°C ±3°C bei 30°C
Switch tension device plug M12 :	18-30VDC
Number of functions :	max. 7 insertable

Thermostate III

Control range:	0 - 80°C
Hysteresis :	5k±1K
Switching voltage max. :	250V AC
Switching current max. :	16A AC, 4A DC

Thermostate I

Control range:	0-120°C
Hysterese	10k±1K
Switching voltage max. :	250V AC
Switching current max. :	16A AC, 4A DC

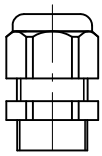

Screw connection PG11
Electric connection for one regulator

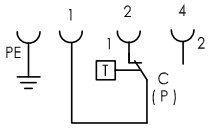

Screw connection PG11
Electric connection for two regulators

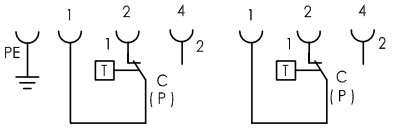

Connector plug M12/4/SW22
Electric connection for one regulator

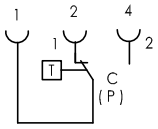

Connector plug M12/4/SW22
Electric connection for two regulators

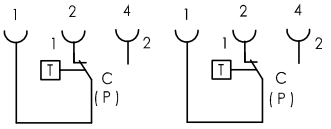

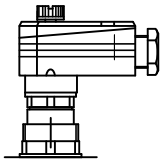

Plug socket connection DIN 43651 IP 65
Electric connection for one regulator

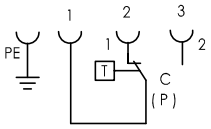

Plug socket connection DIN 43651 IP 65
Electric connection for two regulators

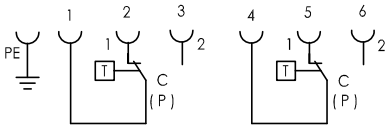

GOLDAMMER
REGELUNGSTECHNIK GMBH
SCHÖLLERSHEIDER STR. 15 PHONE (49) 2104/12093
P.O.BOX 10 02 17 FAX (49) 2104/12028
D-40802 METTMANN www.Goldammer-Regelungstechnik.com

TR 9 - G1/2"

Temperature - Capillary tube - Regulator

serial No.	Date
TR-GB- 500a	09/16

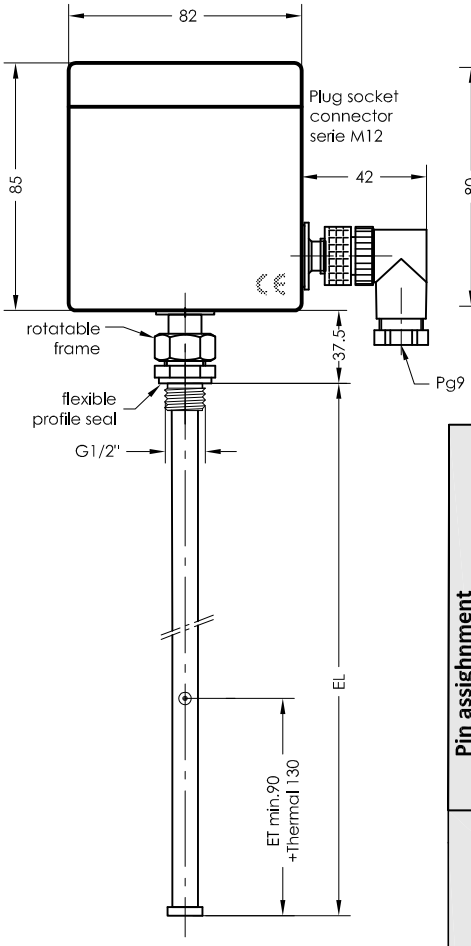

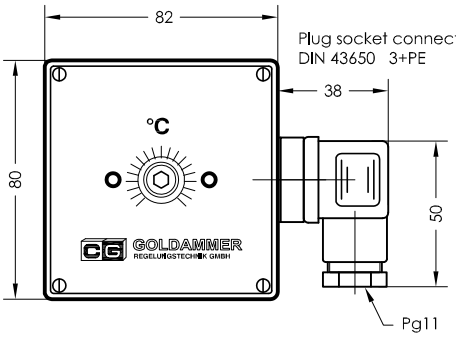

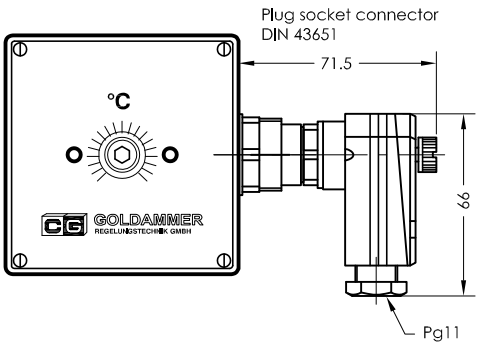

Pin assighnment

Terminal diagram

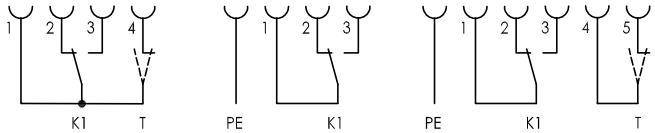

Function under switching temperature

Order code

Specimen order

TR9 1/2" - K1 - 300 - T70Ö - 3+PE

Connection
1/2"

Temperature
K1= 1 contact

EL= length of immersion tube (mm)
100
200
300
400
500

Thermal contact
T10Ö
T40Ö
T50Ö
T60Ö (S)
T70Ö (S) **(Ö preferred)**
T80Ö (S)
T90Ö
(Indicate T1... - T2... for two thermal contacts)

Plug socket connector
3+PE
M12
DIN 43651

Technical data

Description

The TR 9 - K1 temperature capillary tube regulator works according to the principle of liquid extension.
A change of temperature in the probe causes a change in volume. This force operates a potential free changeover contact through a membrane.
The regulator thermostat, adjustable from -10 to 80°C, optional also with a thermal contact as fixed contact for example T60Ö available, can be incorporated.
The probe is located in an immersion tube.

The device must only be installed by specialists.

Technical data

Switch cabinet	ABS with transparent cover
Protection class	IP 65
Plug socket connector	DIN 43650 3+PE or DIN 43651 IP65 or serie M12 IP67 24V / max. 4A
Probe bush	Brass
Operating pressure	16 bar max.
Ambient temperature	-40 to +80°C
Temperature relay	Changeover cont. max 250V~, 10A min. 5 mA
Operating voltage	230V max. / serie M12 - 24V
Temperature range	-10 to 80°C (EL=max.500mm)
Switching accuracy	±5k
Switching difference	5k±1k
Thermal contact	Hysteresis 1K Imax. 2A Calibration ± 3°C

GOLDAMMER
REGELUNGSTECHNIK GMBH
SCHÖLLERSHEIDER STR. 15 PHONE (49) 2104/12093
P.O.BOX 10 02 17 FAX (49) 2104/12028
D-40802 METTMANN www.Goldammer-Regelungstechnik.com

TR 12 - K

Temperature - Capillary tube - Regulator

serial No.	Date
TR-GB- 500b	04/18

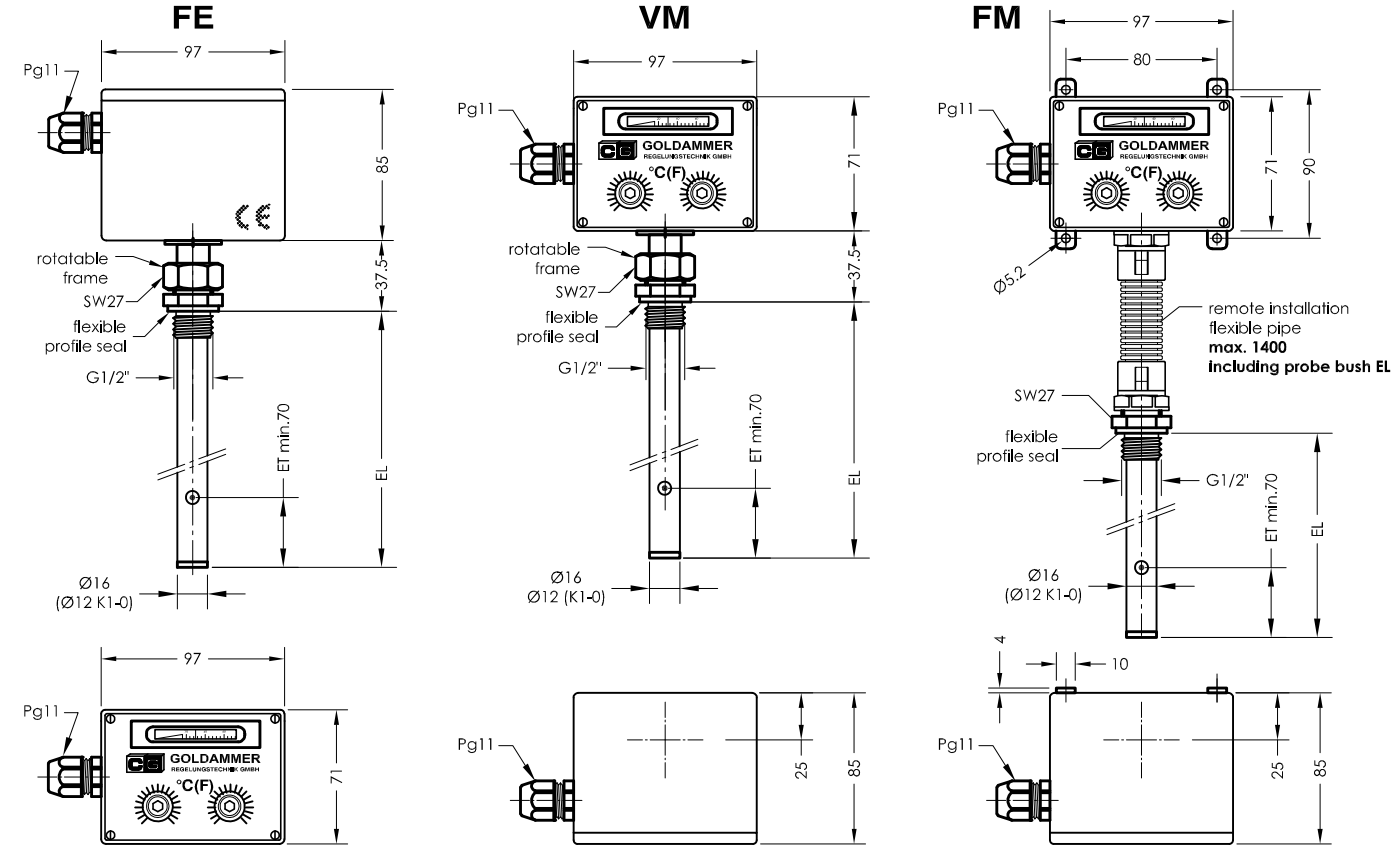

Specimen order

TR 12 - K1 - A - FM - 300 - MS - I - T90Ö - 24V

Temperature
K1= 1 contact
K2= 2 contacts

A= indication of actual temperature
O= without display

FE= permanent installation
VM= vertical installation
FM= remote installation

EL= length of immersion tube (mm)
100 (EL100= max. 3 functions)
200
300
400
500
800
900

MS
VA

I = 0 to 120°C
II = 32 to 248°F

Pt100
Thermal contact
T10Ö
T40Ö
T50Ö
T60Ö (S)
T70Ö (S) **(Ö preferred)**
T80Ö (S)
T90Ö
(Indicate T1... - T2... for two thermal contacts)

Operating voltage
VDC 10-36 = 24V
VAC 10-230 = 230V

Pin assignment

Terminal diagram

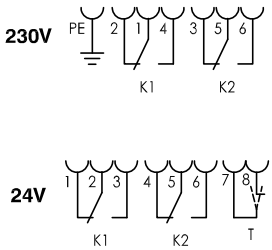

Function under switching temperature

ET= minimum immersion depth in the medium for the probe to archive an exact measurement.

Order code

Technical data

Description

The TR 12 temperature capillary tube regulator works on the principle of liquid extension.
A change of temperature in the probe causes a change in volume. This force operates a potential free changeover contact through a membrane. The desired switching temperatures can be set separate. The range lies between 0 and 120 °C (32 to 248°F), On request the devices will be supplied with a display of actual temperature. The probes are located in an immersion tube.The cable connections are made with connection terminal strips of 1,5 mm².
The device must only be installed by specialists.

With optional plug socket connector DIN 43650 IP65 and serie M12 IP67.

Fixed contact as safety switching point

Technical data

Switch cabinet	ABS with transparent cover
Protection class	IP 65
electric. connection	Cable thread Pg11 + series terminals 1,5mm², tightening torque SEV 0,5Nm max.
Probe bush	Brass (MS) , Stainless stell (VA)
Operating pressure	16 bar max.
Ambient temperature	-40 to +80°C
Temperature display	0 to 120°C ±3°C
Temperature relay	Changeover cont. max 250V~, 10A min. 5 mA
Temperature range	0 to 120°C, (32 to 248°F),
Switching accuracy	±5k
Switching difference	5k±1k
Thermal contact	Hysteresis 1K Imax. 2A Calibration ± 3°C

GOLDAMMER
REGELUNGSTECHNIK GMBH

SCHÖLLERSHEIDER STR. 15 PHONE (49) 2104/12093
P.O.BOX 10 02 17 FAX (49) 2104/12028
D-40802 METTMANN www.Goldammer-Regelungstechnik.com

TR 12 - T - Connector

Temperature - Capillary tube - Regulator

serial No. Date
TR-GB- 500b/4 05/19

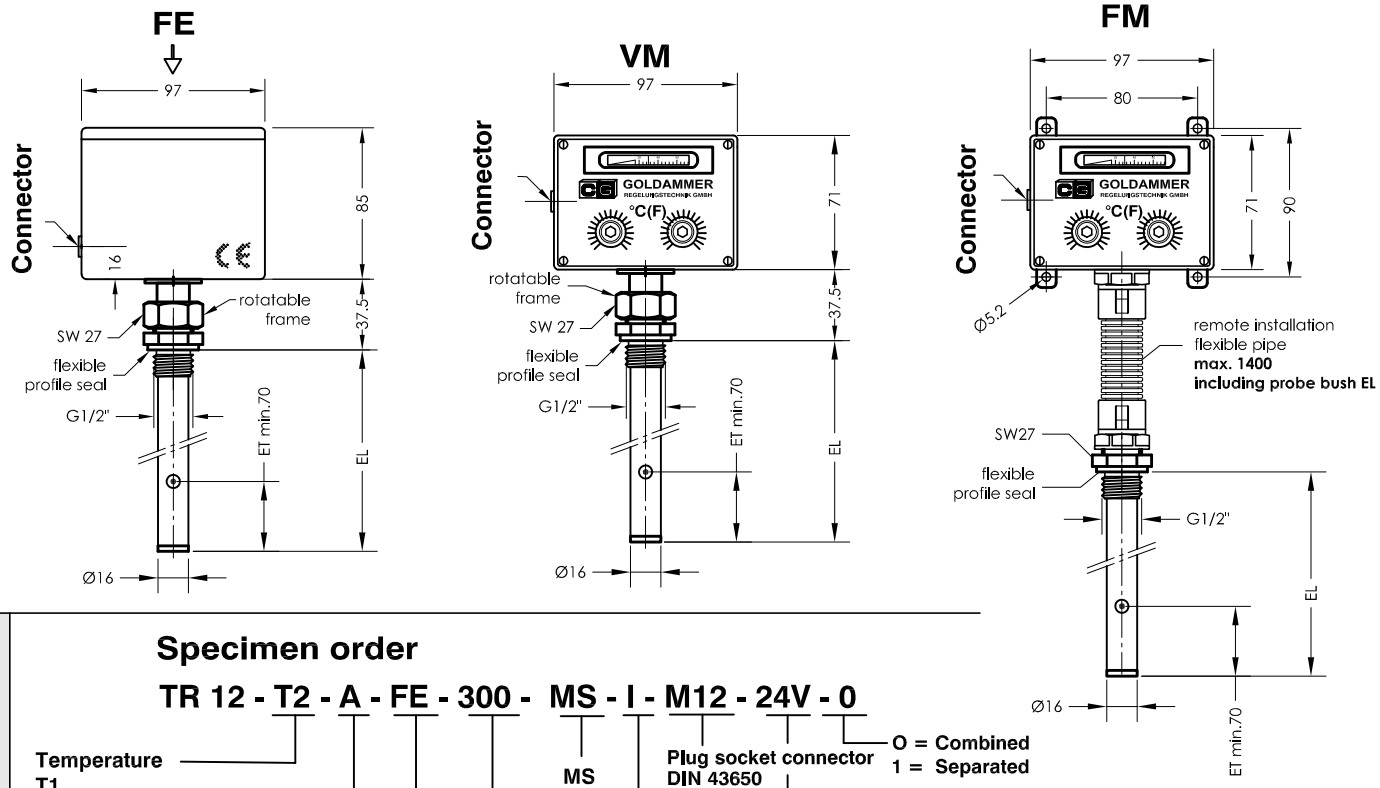

Order code

Specimen order

TR 12 - T2 - A - FE - 300 - MS - I - M12 - 24V - 0

Temperature
T1
T2

A= indication of actual temperature
O= without display

FE= permanent installation
VM= vertical installation
FM= remote installation

EL= length of immersion tube (mm)
100
200
300
400
500
800
900

MS
VA

I = 0 to 120°C
II = 32 to 248°F
III = -10 to 80°C

Plug socket connector
DIN 43650
DIN 43651
M12
2M12
Operating voltage
VDC 10-36 = 24V
VAC 10-230 = 230V

O = Combined
1 = Separated

Pin assignment

Function under switching temperature

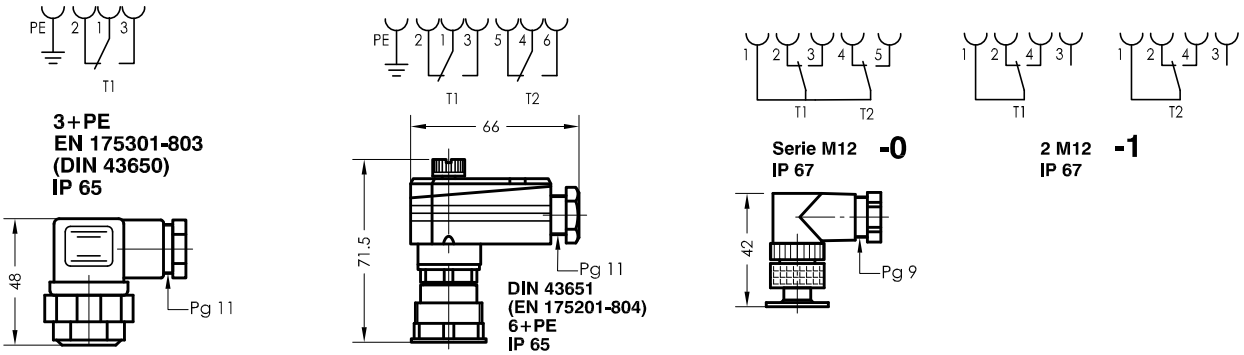

Technical data

Description

The TR 12 temperature capillary tube regulator works on the principle of liquid extension.
A change of temperature in the probe causes a change in volume. This force operates a potential free changeover contact through a membrane. The desired switching temperatures can be set separate. The range lies between -10 to 80°C, 0 to 120 °C (32 to 248°F). On request the devices will be supplied with a display of actual temperature. The probes are located in an immersion tube.

The device must only be installed by specialists.

Technical data

Switch cabinet	ABS with transparent cover
Protection class	IP 65
electric. connection	DIN 43651 IP65
Probe bush	Brass (MS) , Stainless stell (VA)
Operating pressure	16 bar max.
Ambient temperature	-40 to +80°C
Temperature display	0 to 120°C ±3°C
Temperature relay	Changeover 250V~,10A
Temperature range	-10 to 80°C,0 to 120°C, (32 to 248°F)
Switching accuracy	±5k
Switching difference	5k±1k
ET minimum	70mm

GOLDAMMER
REGELUNGSTECHNIK GMBH
SCHÖLLERSHEIDER STR. 15 PHONE (49) 2104/12093
P.O.BOX 10 02 17 FAX (49) 2104/12028
D-40802 METTMANN www.Goldammer-Regelungstechnik.com

TR 15 - K3 / K4

Temperature - Capillary tube - Regulator

serial No.	Date
TR-GB- 501	07/18

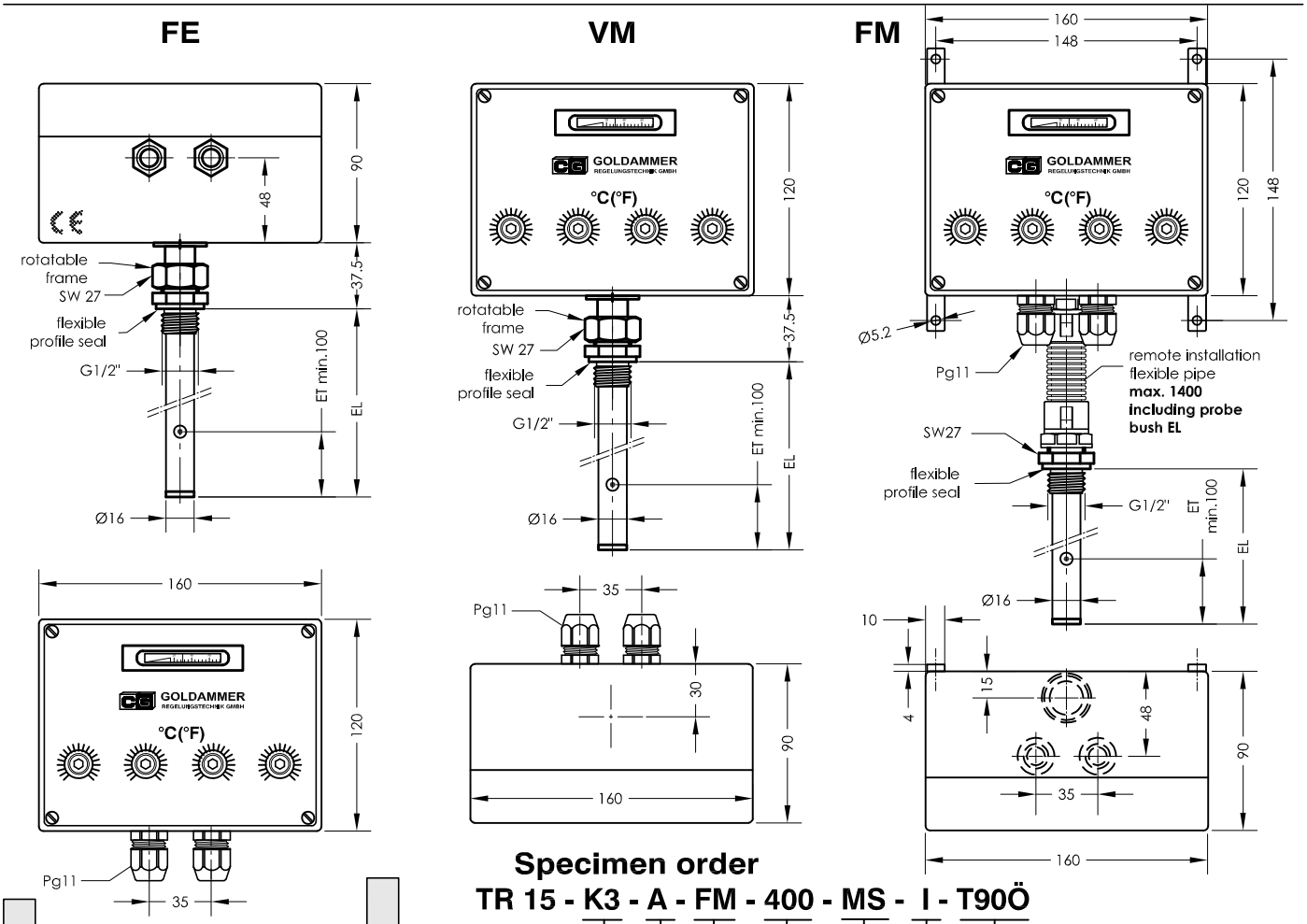

Specimen order

TR 15 - K3 - A - FM - 400 - MS - I - T90Ö

- **Temperature** — K3= 3 contacts; K4= 4 contacts
- **A** — A= indication of actual temperature; O= without display
- **FM** — FE= permanent installation; VM= vertical installation; FM= remote installation
- **400** — EL= length of immersion tube (mm): 100 (EL100= max. 3 functions), 200, 300, 400, 500, 800, 900
- **MS** — MS; VA
- **I** — I = 0 to 120°C; II = 32 to 248°F; III = -10 to 80°C
- **T90Ö** — Pt100; Thermal contact; T10Ö; T40Ö; T50Ö; T60Ö (S); T70Ö (S); T80Ö (S); T90Ö (Ö preferred); (Indicate T1... - T2... for two thermal contacts)

Pin assignment

Terminal diagram

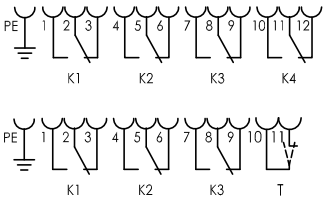

Function switching temperature achieved

ET= minimum immersion depth in the medium for the probe to archive an exact measurement.

Order code

Technical data

Description

The TR 15 - K3 / K4 temperature capillary tube regulator works on the principle of liquid extension

A change of temperature in the probe causes a change in volume. This force operates a potential free changeover contact through a membrane. The desired switching temperatures can be set separate. The range lies between 0 and 120 °C, (32 to 248°F), (-10 to 80°C). On request the devices will be supplied with a display of actual temperature.
The probes are located in an immersion tube.The cable connections are made with connection terminal strips of 1,5 mm².
The device must only be installed by specialists.

Fixed contact as safety switching point

Technical data

Switch cabinet	ABS with transparent cover
Protection class	IP 65
electric. connection	Cable thread Pg11 + series terminals 1,5mm², tightening torque SEV 0,5Nm max.
Probe bush	Brass , Stainless steel
Operating pressure	16 bar max.
Ambient temperature	-40 to 80°C
Temperature display	0 to 120°C ±3°C
Temperature relay	Changeover cont. max 250V~, 10A min. 5 mA
Temperature range	0 to 120°C, (32 to 248°F) (-10 to 80°C EL. max.500mm)
Switching accuracy	±5k
Switching difference	5k±1K
Thermal contact	Hysteresis 1K Imax. 2A Calibration ± 3°C

GOLDAMMER REGELUNGSTECHNIK GMBH
SCHÖLLERSHEIDER STR. 15 PHONE (49) 2104/12093
P.O.BOX 10 02 17 FAX (49) 2104/12028
D-40802 METTMANN www.Goldammer-Regelungstechnik.com

TR 15 - K3 / K4 - Connector

Temperature - Capillary tube - Regulator

serial No.	Date
TR-GB- 501/1	04/19

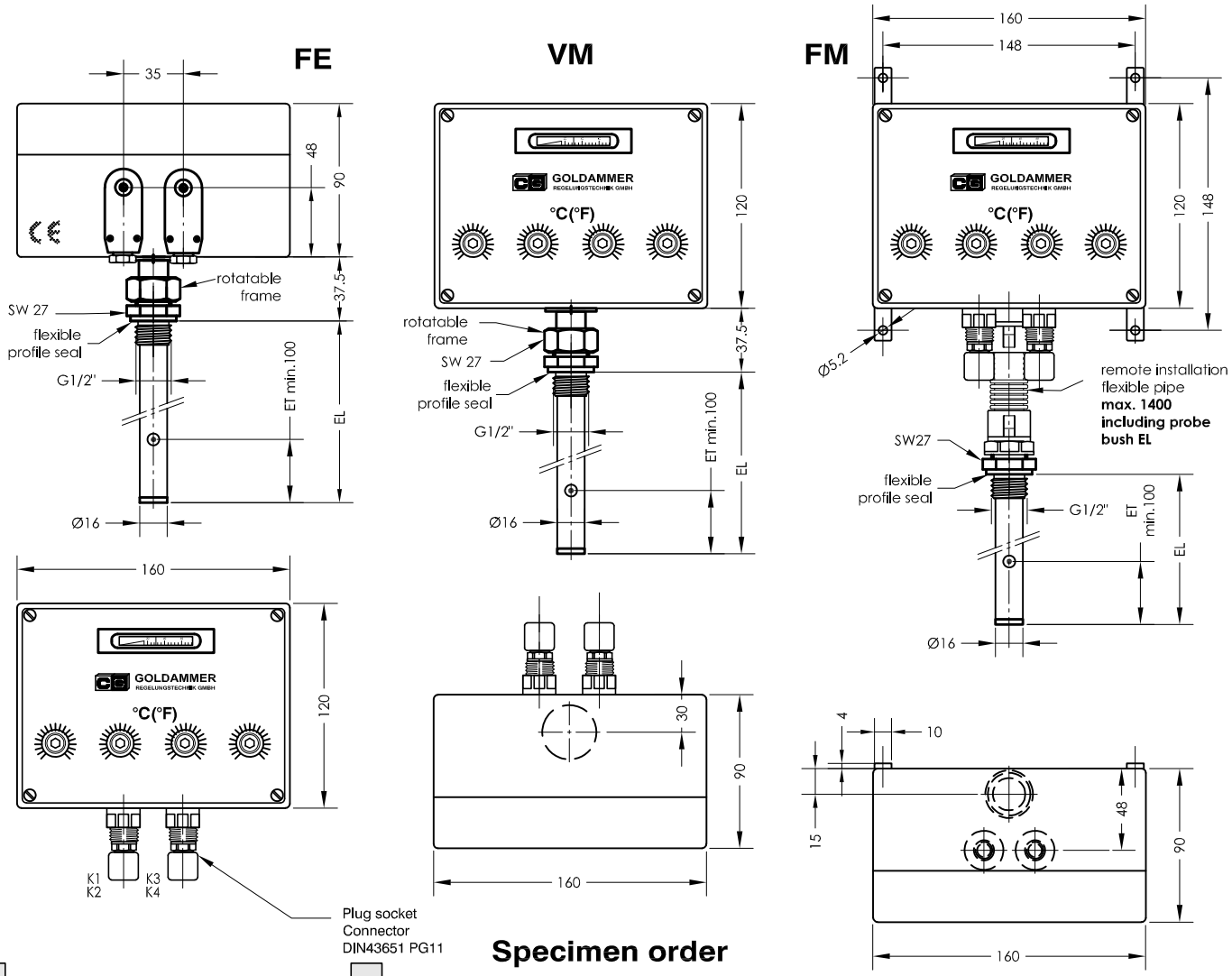

Specimen order

TR 15 - K3 - A - FM - 400 - MS - I - DIN43651

Pin assignment

Terminal diagram

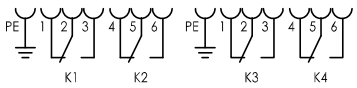

Function under switching temperature

ET= minimum immersion depth in the medium for the probe to archive an exact measurement.

Order code

Temperature
K3= 3 contacts
K4= 4 contacts

A= indication of actual temperature
O= without display

FE= permanent installation
VM= vertical installation
FM= remote installation

EL= length of immersion tube (mm)
100 (EL100= max. 200 3 functions)
300
400
500
800
900

MS
VA

I = 0 to 120°C
II = 32 to 248°F
III = -10 to 80°C

Technical data

Description

The TR 15 - K3 / K4 temperature capillary tube regulator works on the principle of liquid extension.
A change of temperature in the probe causes a change in volume. This force operates a potential free changeover contact through a membrane. The desired switching temperatures can be set separate. The range lies between 0 and 120 °C, (32 to 248°F), (-10 to 80°C). On request the devices will be supplied with a display of actual temperature. The probes are located in an immersion tube.
The device must only be installed by specialists.

Technical data

Switch cabinet	ABS with transparent cover
Protection class	IP 65
electric. connection	DIN43651 / Connector
	Brass (MS) , Stainless steel (VA)
Probe bush	16 bar max.
Operating pressure	-40 to 80°C
Ambient temperature	0 to 120°C ±3°C
Temperature display	Changeover cont. max 250V~, 1(
Temperature relay	min. 5 mA
Temperature range	0 to 120°C, (32 to 248°F)
	(-10 to 80°C EL max.500mm)
Switching accuracy	±5k
Switching difference	5k±1k

GOLDAMMER
REGELUNGSTECHNIK GMBH
SCHÖLLERSHEIDER STR. 15 PHONE (49) 2104/12093
P.O.BOX 10 02 17 FAX (49) 2104/12028
D-40802 METTMANN www.Goldammer-Regelungstechnik.com

TR 15 - K3 / K4 - Connector

Temperature - Capillary tube - Regulator

serial No.	Date
TR-GB- 501/2	04/19

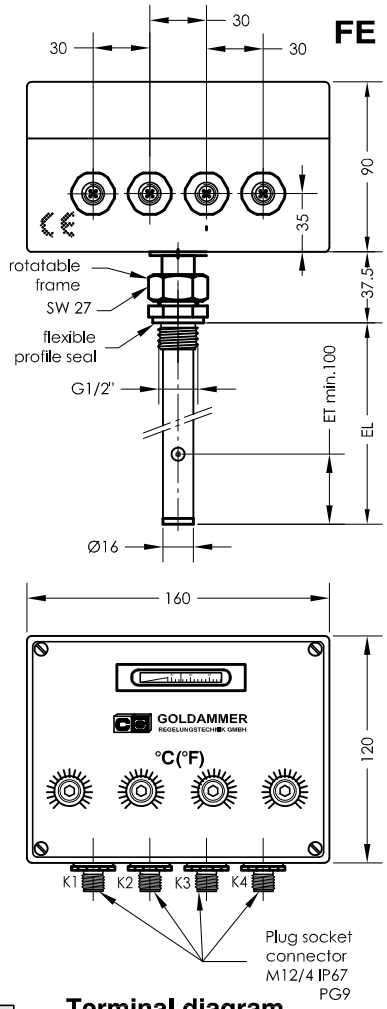

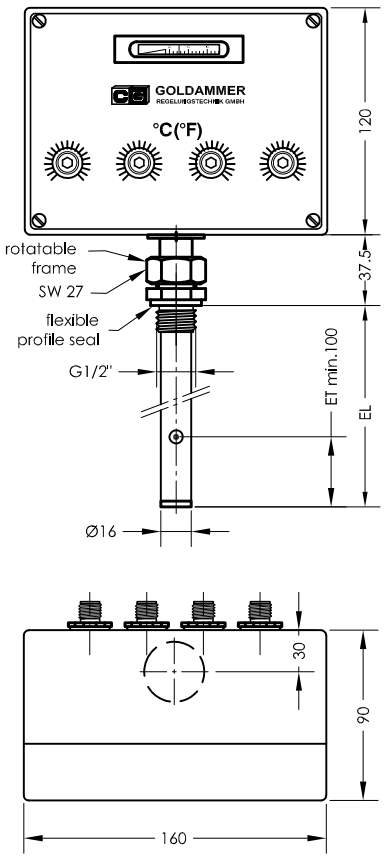

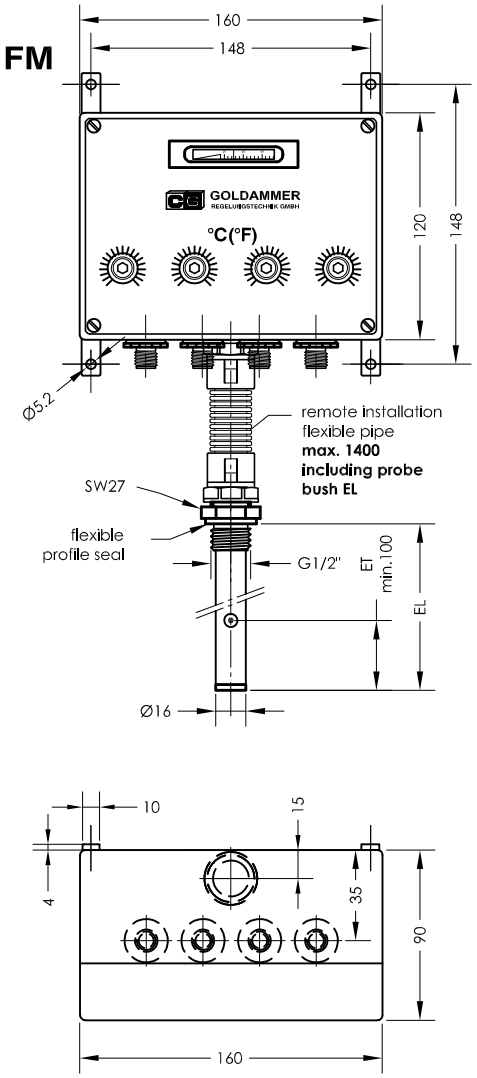

Terminal diagram

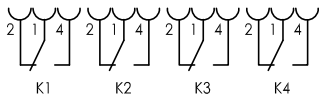

Function under switching temperature

ET= minimum immersion depth in the medium for the probe to archive an exact measurement.

Specimen order

TR 15 - K3 - A - FM - 400 - MS - I - M12/4 -24V

Temperature
K3= 3 contacts
K4= 4 contacts

A= indication of actual temperature
O= without display

FE= permanent installation
VM= vertical installation
FM= remote installation

EL= length of immersion tube (mm)
100 (EL100= max. 3 functions)
200
300
400
500
800
900

MS
VA

I = 0 to 120°C
II = 32 to 248°F
III = -10 to 80°C

Pin assighnment

Order code

Technical data

Description

The TR 15 - K3 / K4 temperature capillary tube regulator works on the principle of liquid extension

A change of temperature in the probe causes a change in volume. This force operates a potential free changeover contact through a membrane. The desired switching temperatures can be set separate. The range lies between 0 to 120 °C, (32 to 248°F), (-10 to 80°C). On request the devices will be supplied with a display of actual temperature.
The probes are located in an immersion tube.
The cable connections are made via plug M12/4.

The device must only be installed by specialists.

Technical data

Switch cabinet	ABS with transparent cover
Protection class	IP 65
electric. connection	M12/4 IP67
Probe bush	Brass (MS) , Stainless steel (VA)
Operating pressure	16 bar max.
Ambient temperature	-40 to 80°C
Temperature display	0 to 120°C ±3°C
Temperature relay	Changeover cont. max 24V, 4A , min. 5 mA
Temperature range	0 to 120°C, (32 to 248°F) (-10 to 80°C EL max. 500mm)
Switching accuracy	±5k
Switching difference	5k±1k

GOLDAMMER
REGELUNGSTECHNIK GMBH

SCHÖLLERSHEIDER STR. 15 PHONE (49) 2104/12093
P.O.BOX 10 02 17 FAX (49) 2104/12028
D-40802 METTMANN www.Goldammer-Regelungstechnik.com

TR 15 - K5 / K6

Temperature - Capillary tube - Regulator

serial No.	Date
TR-GB- 502	04/18

FE

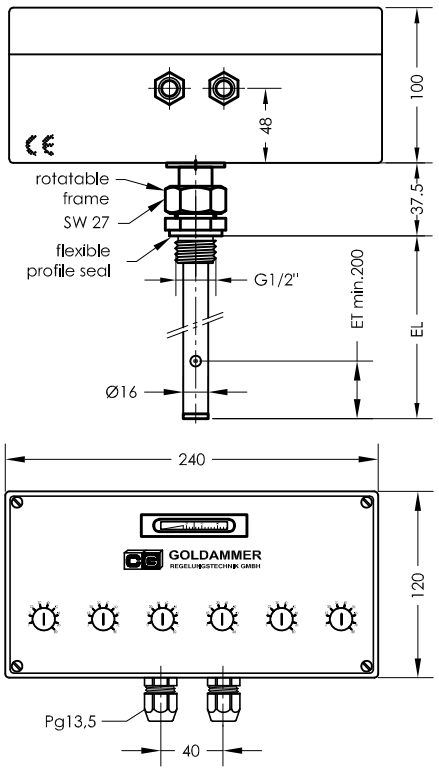

VM

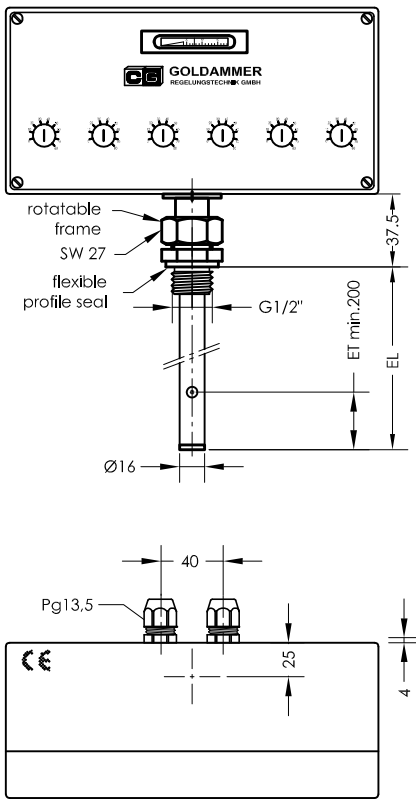

FM

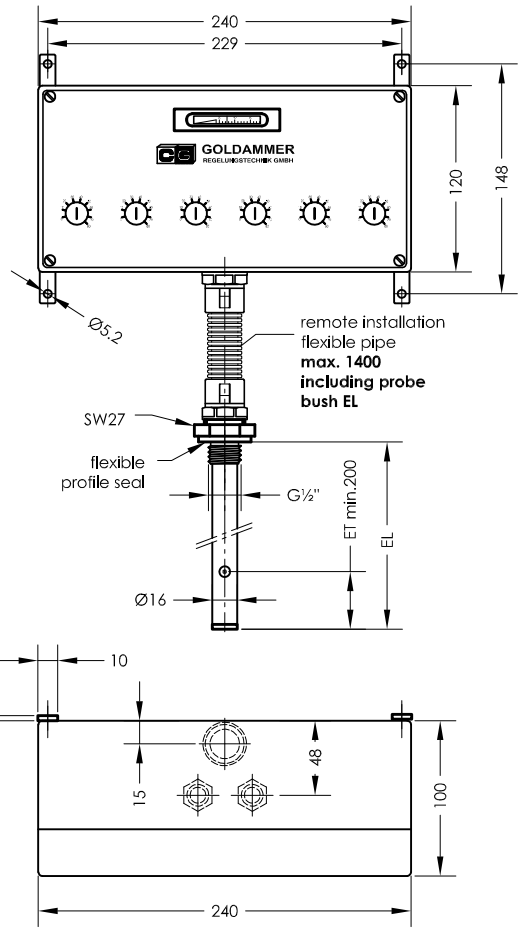

Terminal diagram

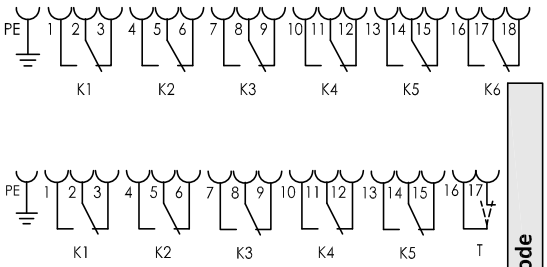

Function switching temperature achieved

ET= minimum immersion depth in the medium for the probe to archive an exact measurement.

Specimen order

TR 15 - K6 - A - FM - 400 - MS - I - T90Ö

Order code

- **K6** — Temperature K5= 5 contacts K6= 6 contacts
- **A** — A= indication of actual temperature
- **FM** — FE= permanent installation; VM= vertical installation; FM= remote installation
- **400** — EL= length - of immersion tube min.300mm
- **MS** — MS VA
- **I** — I = 0 to 120°C; II = 32 to 248°F; III = 0 to 80°C
- **T90Ö** — Pt100 Thermal contact; T10Ö; T40Ö; T50Ö; T60Ö (S); T70Ö (S); T80Ö (S); T90Ö (Indicate T1... - T2... for two thermal contacts); (Ö preferred)

Technical data

Description

The TR 15 - K5 / K6 temperature capillary tube regulator works on the principle of liquid extension.
A change of temperature in the probe causes a change in volume. This force operates a potential free changeover contact through a membrane. The desired switching temperatures can be set separate.The range lies between 0 and 120 °C, (32 and 248°F), (0 and 80°C).
On request the devices will be supplied with a display of actual temperature. The probes are located in an immersion tube.The cable connections are made with connection terminal strips of 1,5 mm².

The device must only be installed by specialists.

Technical data

Switch cabinet	ABS with transparent cover
Protection class	IP 65
electric. connection	Cable thread Pg11 + series terminals 1,5mm², tightening torque SEV 0,5Nm max.
Probe bush	Brass , Stainless steel
Operating pressure	16 bar max.
Ambient temperature	-40 to +80°C
Temperature display	0 to 120°C ±3°C
Temperature relay	Changeover cont. max. 250V~, 10A min. 5 mA
Temperature range	0 to 120°C (32 to 248°F) 0 to 80°C (EL = max. 1400mm)
Switching accuracy	±5k
Switching difference	5k±1K
Thermal contact	Hysteresis 1K Imax. 2A Calibration ± 3°C

GOLDAMMER
REGELUNGSTECHNIK GMBH

SCHÖLLERSHEIDER STR. 15
P.O.BOX 10 02 17
D-40802 METTMANN

PHONE (49) 2104/12093
FAX (49) 2104/12028
www.Goldammer-Regelungstechnik.com

TR 15 - K5 / K6 - Connector

Temperature - Capillary tube - Regulator

serial No.	Date
TR-GB- 502a	04/19

FE

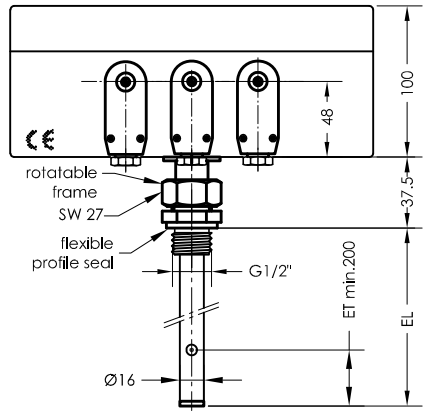

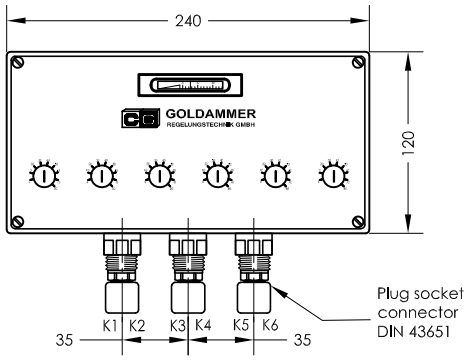

VM

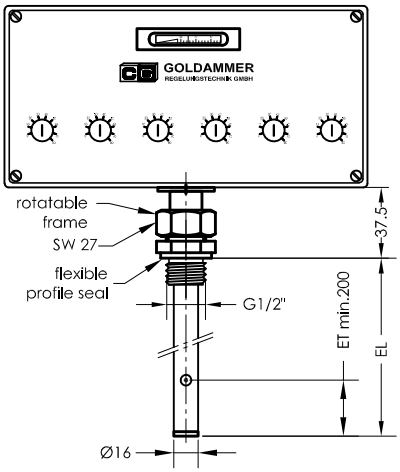

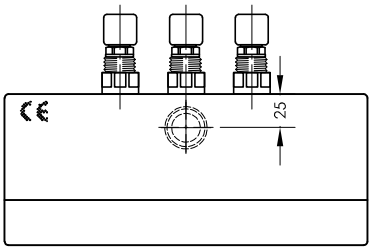

FM

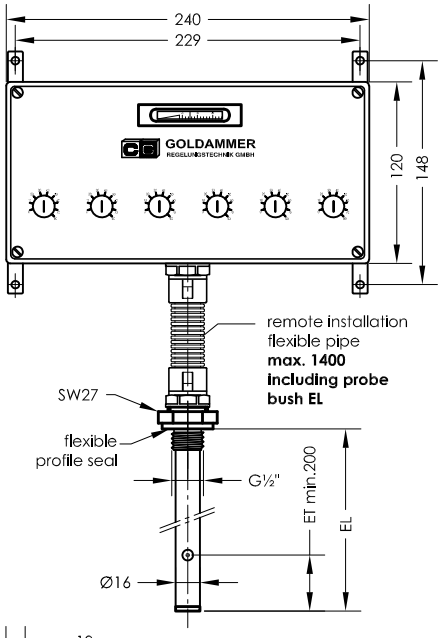

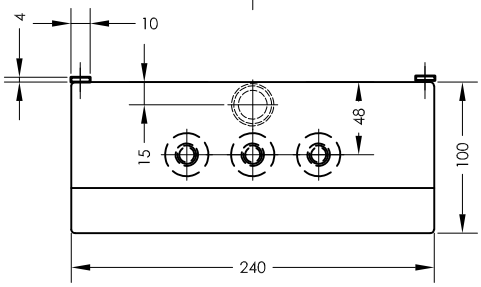

Pin assignment

Terminal diagram

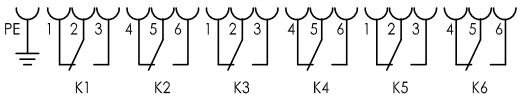

Function under switching temperature

ET= minimum immersion depth in the medium for the probe to archive an exact measurement.

Order code

Specimen order

TR 15 - K6 - A - FM - 400 - MS - II - DIN43651

Temperature
K5= 5 contacts
K6= 6 contacts

A= indication of actual temperature

FE= permanent installation
VM= vertical installation
FM= remote installation

EL= length of immersion tube (mm)

MS
VA

300 max. 5 functions
400 max. 6 functions
500 max. 7 functions
800 max. 7 functions
900 max. 7 functions

II = 32 to 248°F
III = 0 to 80°C

Technical data

Description

The TR 15 - K5 / K6 temperature capillary tube regulator works on the principle of liquid extension

A change of temperature in the probe causes a change in volume. This force operates a potential free changeover contact through a membrane. The desired switching temperatures can be set separate.The range lies between 32 and 248°F, 0 and 80°C.
On request the devices will be supplied with a display of actual temperature. The probes are located in an immersion tube.The cable connections are made with connection plug socket connector DIN43651.

The device must only be installed by specialists.

Technical data

Switch cabinet	ABS with transparent cover
Protection class	IP 65
electric. connection	DIN43651
Probe bush	Brass (MS) , Stainless steel (VA)
Operating pressure	16 bar max.
Ambient temperature	-40 to +80°C
Temperature display	0 to 120°C ±3°C
Temperature relay	Changeover cont. max. 250V~, 10A min. 5 mA
Temperature range	32 to 248°F, 0 to 80°C (EL = max. 1400mm)
Switching accuracy	±5k
Switching difference	5k±1K

GOLDAMMER
REGELUNGSTECHNIK GMBH

SCHÖLLERSHEIDER STR. 15 PHONE (49) 2104/12093
P.O.BOX 10 02 17 FAX (49) 2104/12028
D-40802 METTMANN www.Goldammer-Regelungstechnik.com

TR 15 - K5 / K6 - Connector

Temperature - Capillary tube - Regulator

serial No.	Date
TR-GB- 502b	04/19

FE

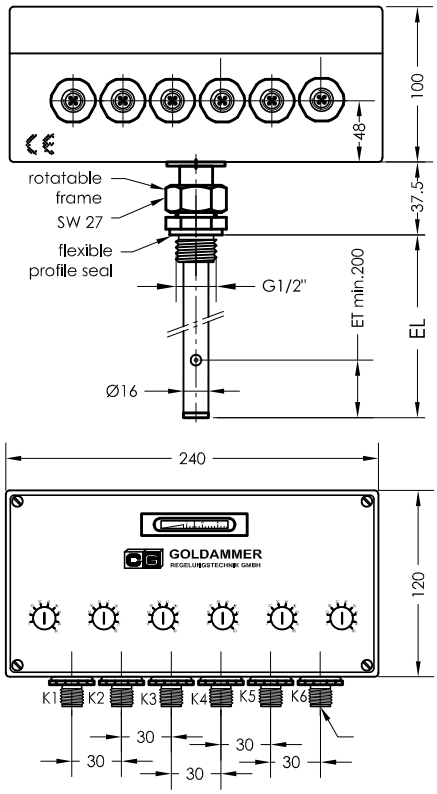

VM

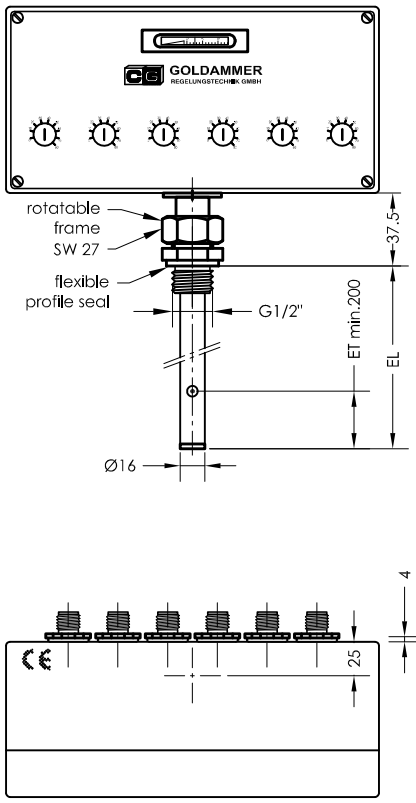

FM

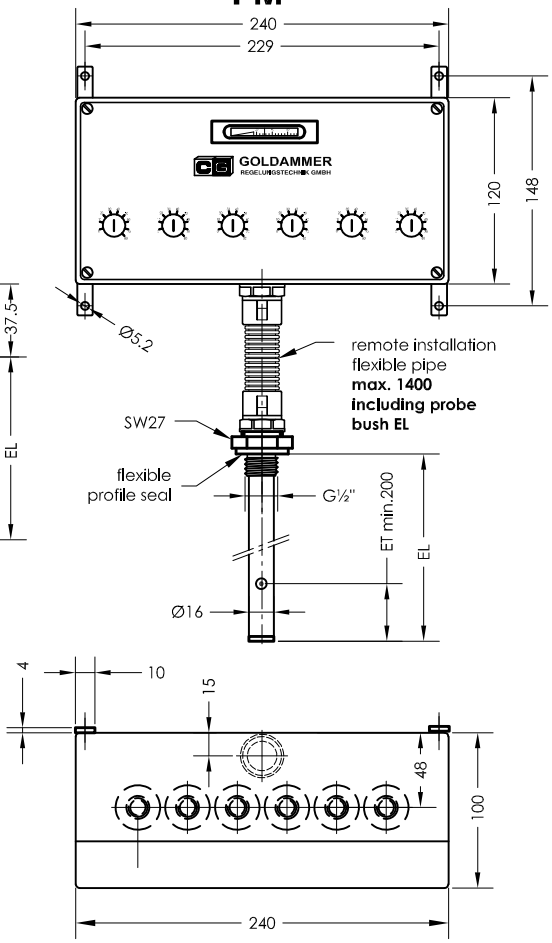

Pin assignment

Terminal diagram

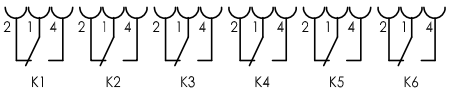

Function under switching temperature

ET= minimum immersion depth in the medium for the probe to archive an exact measurement.

Order code

Specimen order

TR 15 - K6 - A - FM - 400 - MS - II - M12/4 - 24V

Temperature
K5= 5 contacts
K6= 6 contacts

A= indication of actual temperature

FE= permanent installation
VM= vertical installation
FM= remote installation

EL= length of immersion tube (mm)
300 max. 5 functions
400 max. 6 functions
500 max. 7 functions
800 max. 7 functions
900 max. 7 functions

MS
VA

II = 32 to 248°F
III = 0 to 80°C

Technical data

Description

The TR 15 - K5 / K6 temperature capillary tube regulator works on the principle of liquid extension

A change of temperature in the probe causes a change in volume. This force operates a potential free changeover contact through a membrane. The desired switching temperatures can be set separate.The range lies between 32 and 248°F, 0 and 80°C.
On request the devices will be supplied with a display of actual temperature.
The probes are located in an immersion tube.

The device must only be installed by specialists.

Technical data

Switch cabinet	ABS with transparent cover
Protection class	IP 65
electric. connection	M12/4 IP67
Probe bush	Brass (MS) , Stainless stell (VA)
Operating pressure	16 bar max.
Ambient temperature	-40 to +80°C
Temperature display	0 to 120°C ±3°C
Temperature relay	Changeover cont. max. 24V~, 4A min. 5 mA
Temperature range	32 to 248°F 0 to 80°C (EL = max 1400mm)
Switching accuracy	±5k
Switching difference	5k±1K

GOLDAMMER
REGELUNGSTECHNIK GMBH

SCHÖLLERSHEIDER STR. 15
P.O.BOX 10 02 17
D-40802 METTMANN

PHONE (49) 2104/12093
FAX (49) 2104/12028
www.Goldammer-Regelungstechnik.com

TR 4 - G1/2" - G3/4" - G1" - M20 - M24

Temperature transducer 4-20 mA

serial No.	Date
TR-GB- 505	04/19

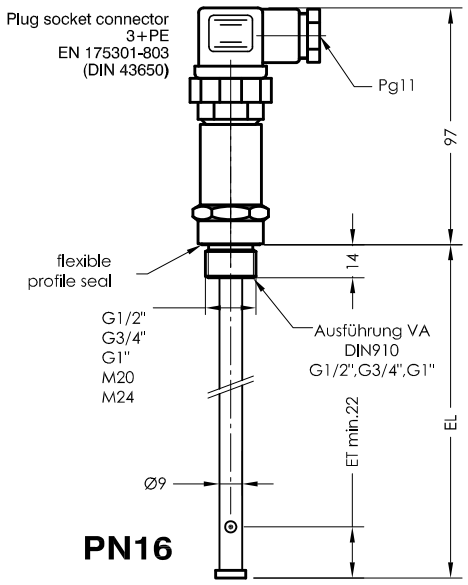

PN16

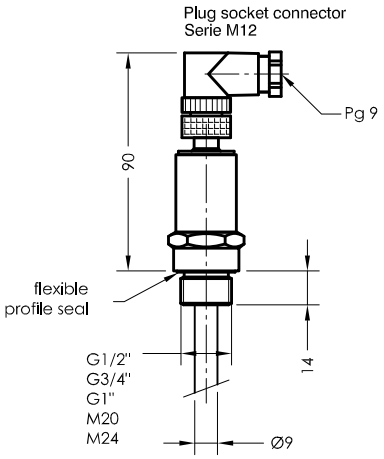

Pin assignment

Plug securing

power supply

TR4:
1 = +24V DC
2 = +Temperatur 4-20mA

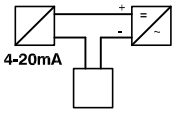

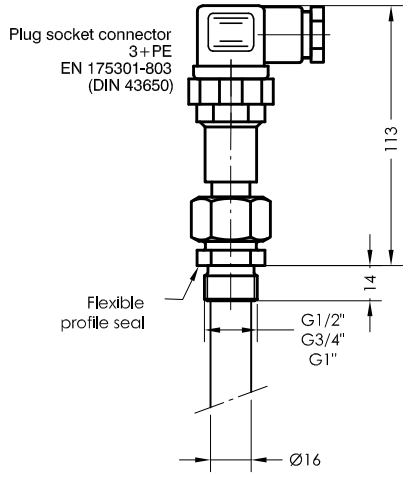

PN64

Order code

Specimen order

TR 4 - G1/2" - PN16 - MS - 200 - M12

Connection thread
G1/2"
G3/4"
G1"
M20
M24

Operating pressure
PN16
PN64

Execution
MS = Brass
VA = stainless steel - G1/2", G3/4", G1" (DIN910)

Plug socket connector
3+PE
M12

EL = length of immersion tube (mm)
22
100
200
300
400
500
800
1000

ET= Minimum immersion depth of sensor in medium for precise scanning.

Technical data

Description

The temperature transducer TR 4 - G1/2" - 3/4" - G1"- M24 - M20 can easily be installed without line compensation. The temperature dependent signal emitted from a Pt100 resistor mounted in the sensor tip is converted with the transducer installed in the measuring tube of the sensor into a temperature-linear current change of 4-20 mA. Electrical connection to the voltage supply and to one or several controllers, stored program controller or measuring instruments must be made with a shielded cable for interference free data signal transmission for all electronic areas.

The device must only be installed by specialists.

Technical data

Measuring tube	Brass, stainless steel
Connection/ Operating pressure	PN 16 - brass G1/2" SW27 brass G3/4" SW32 brass G1" SW41 brass M20 x 1,5 SW27 brass M24 x 1,5 SW32 PN64 - stainless steel G1/2" SW27 DIN910 stainless steel G1" SW41
Plug socket connector	3+PE - EN 175301-803 (DIN 43650) IP65 or serie M12 IP67
Operating voltage	12V - 30V DC
Measuring range	4-20 mA / 0-100°C
Thermal element	Pt100
Load	RB= U-12V / 20mA

Other temperature ranges on request

GOLDAMMER
REGELUNGSTECHNIK GMBH

SCHÖLLERSHEIDER STR. 15 PHONE (49) 2104/12093
P.O.BOX 10 02 17 FAX (49) 2104/12028
D-40802 METTMANN www.Goldammer-Regelungstechnik.com

TR 4 - G1/2" - G3/4" - G1" - M20 - M24 - F

Temperature transducer 4-20 mA with spring inside

serial No.	Date
TR-GB- 505a	09/16

Execution brass

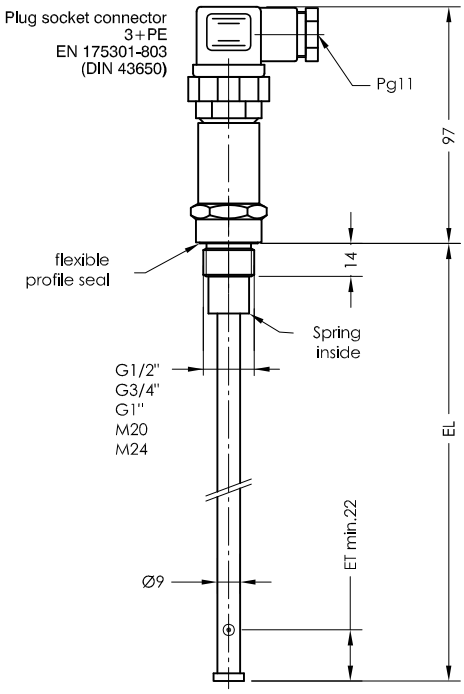

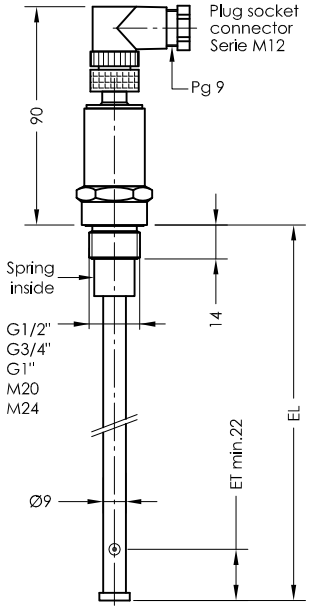

Pin assignment

Plug securing

power supply

TR4:
1 = +24V DC
2 = +Temperatur 4-20mA

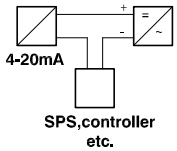

Execution stainless steel

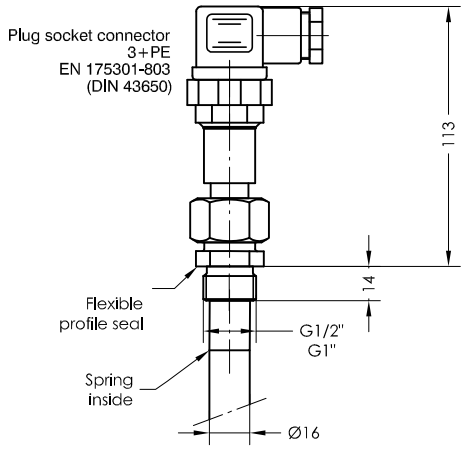

Order code

Specimen order

TR 4 - G1/2" - F - MS - 200 - M12

Connection thread
G1/2"
G3/4"
G1"
M20
M24

Execution
MS = Brass
VA = stainless steel

EL = length of immersion tube (mm)
22
100
200
300
400
500
800
1000

Plug socket connector
3+PE
M12

ET= Minimum immersion depth of sensor in medium for precise scanning.

Technical data

Description

The temperature transducer TR 4 - 1/2"- G3/4" - G1"- M20 -M24 - F with spring inside can easily be installed without line compensation. The temperature dependent signal emitted from a Pt100 resistor mounted in the sensor tip is converted with the transducer installed in the measuring tube of the sensor into a temperature-linear current change of 4-20 mA.
The Electrical connection to the voltage supply and to one or several controllers, stored program controller or measuring instruments must be made with a shielded cable for interference free data signal transmission for all electronic areas.

The device must only be installed by specialists.

Technical data

Measuring tube	Brass, stainless steel
Connection	Brass/stainless steel G1/2" SW27 Brass G3/4" SW32 Brass/stainless steel G1" SW41 Brass M20 x 1,5 SW27 Brass M24 x 1,5 SW32
Operating pressure	1bar
Range of spring	10mm
System pressure	25Nm
Plug socket connector	3+PE - EN 175301-803 (DIN 43650) PE IP65 or serie M12 IP67 only Brass
Operating voltage	12V - 30V DC
Measuring range	4-20 mA / 0-100°C
Thermal element	Pt100
Load	RB= U-12V / 20mA

Other temperature ranges on request

GOLDAMMER
REGELUNGSTECHNIK GMBH
SCHÖLLERSHEIDER STR. 15 PHONE (49) 2104/12093
P.O.BOX 10 02 17 FAX (49) 2104/12028
D-40802 METTMANN www.Goldammer-Regelungstechnik.com

NR 85 - MA - 150°C max.

Temperature transducer 4-20 mA

serial No.	Date
TR-GB- 505b	05/19

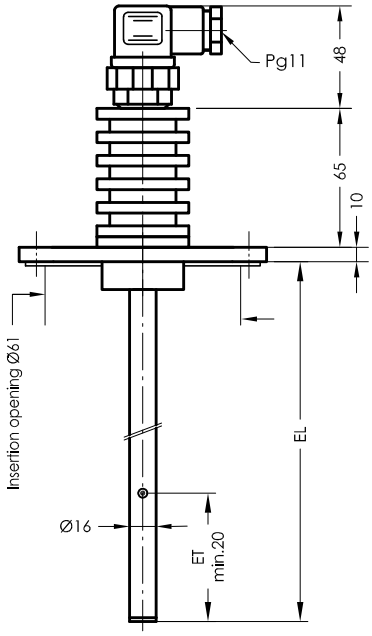

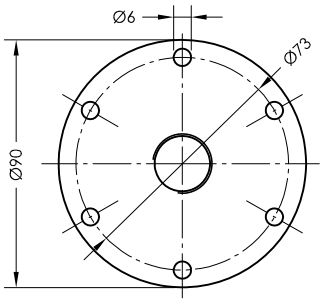

according to DIN24557 part 2

Pin assignment

Plug securing

power supply

NR85:
1 = +24V DC
2 = +Temperatur 4-20mA

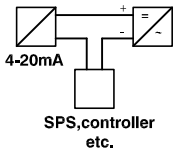

Order code

Specimen order

NR 85 - MA - VA - 200 - M12 - 150°C

- 85 — Connection Flange NR85
- VA — Execution, VA = stainless steel
- 200 — EL = length of immersion tube (mm): 22, 100, 200, 300, 400, 500, 800, 1000
- M12 — Plug socket connector 3+PE M12

ET= Minimum immersion depth of sensor in medium for precise scanning.

Connector variants

3+PE
EN 175301-803
(DIN 43650)
IP 65

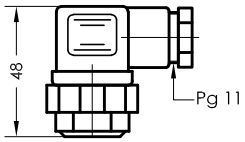

Serie M12
IP 67

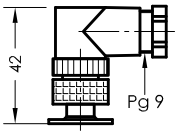

Technical data

Description

The temperature transducer NR 85 - MA - 4 - 20mA - 150°C can easily be installed without line compensation.
The temperature dependent signal emitted from a Pt100 resistor mounted in the sensor tip is converted with the transducer installed in the measuring tube of the sensor into a temperature-linear current change of 4-20 mA.
Electrical connection to the voltage supply and to one or several controllers, stored program controller or measuring instruments must be made with a shielded cable for interference free data signal transmission for all electronic areas.

The device must only be installed by specialists.

Technical data

Measuring tube	Stainless steel
Connection Flange	Stainless stee
Operating pressure	1 bar max.
Plug socket connector	3+PE - EN 175301-803 (DIN 43650) IP65 or serie M12 IP67 12V - 30V DC
Medium temperature	150°C
Operating voltage	4-20 mA / 0-160°C
Measuring range	Pt100
Thermal element	
Load	RB= U-12V / 20mA

Other temperature ranges on request

GOLDAMMER
REGELUNGSTECHNIK GMBH

SCHÖLLERSHEIDER STR. 15 PHONE (49) 2104/12093
P.O.BOX 10 02 17 FAX (49) 2104/12028
D-40802 METTMANN www.Goldammer-Regelungstechnik.com

WTR - G1/2" - G3/4" - G1" - M20 - M24

Resistance thermometer Pt100

serial No.	Date
TR-GB- 506	09/19

PN 16

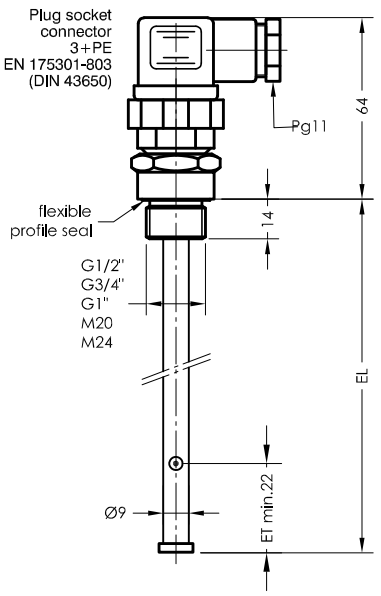

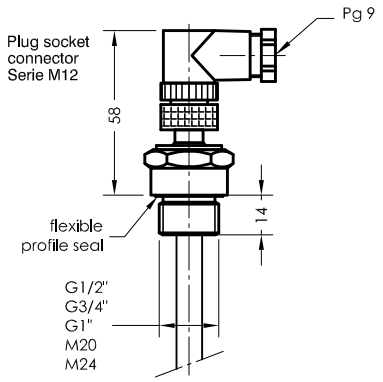

Pin assignment

Plug securing

Pt100

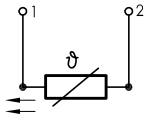

two-wire connection

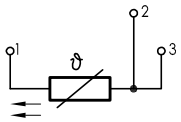

Three-wire connection

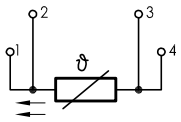

four-wire connection

PN 64

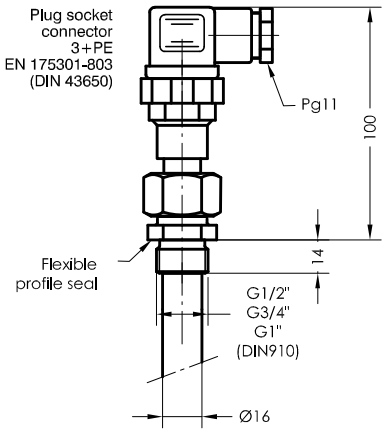

ET= Minimum immersion depth of sensor in medium for precise scanning.

Order code

Specimen order

WTR - G 1/2" - PN 16 - MS - III - 200 - M12

Connection thread
G1/2"
G3/4"
G1"
M20
M24

Operating pressure
PN 16
PN 64

Execution
MS = Brass
VA = stainless steel - G1/2", G3/4",G1" (DIN910)

III = three-wire connection
IV = four-wire connection

Plug socket connector
3+PE
M12

EL = length of immersion tube (mm)
22
100
200
300
400
500
800
1000

Technical data

Description

Resistance thermometers are used for direct temperature measurement in the range of -50°C to +120°C .

Standardized basic values enable the resistance thermometer to be used at indicating and control devices without calibration.

With a Pt100, the resistance is 100 Ω ±0,12% at 0°C. The resistance is correspondingly greater at higher temperatures and smaller at lower temperatures.

Technical data

Measuring tube	Brass / stainless steel
Connecting thread / nominal pressure	PN 16 - brass G1/2" SW27 brass G3/4" SW32 brass G1" SW41 brass M20 x 1,5 SW27 brass M24 x 1,5 SW32 PN 64 - stainless steel G1" SW41 stainless steel G1/2" SW27
Plug-socket connector	3+PE - EN 175301-803 (DIN 43650) IP65 or serie M12 IP67
Measuring inset	Pt100 with Standardized basics to DIN IEC 60751
Temperature range	-50°C to +120°C

Other temperature ranges available on request

GOLDAMMER
REGELUNGSTECHNIK GMBH

SCHÖLLERSHEIDER STR. 15 PHONE (49) 2104/12093
P.O.BOX 10 02 17 FAX (49) 2104/12028
D-40802 METTMANN www.Goldammer-Regelungstechnik.com

TRW - G1/2" - G3/4" - G1" - M20 - M24

Temperature monitor

serial No.	Date
TR-GB- 507	08/17

PN16

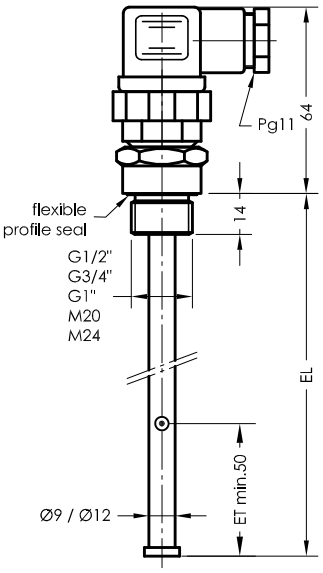

PN 250

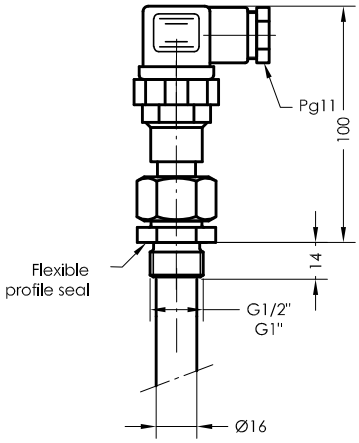

Pin assighnment

Plug securing

Break/Make

DIN 43650 3+PE
3 Polig + PE

Serie M12/24V

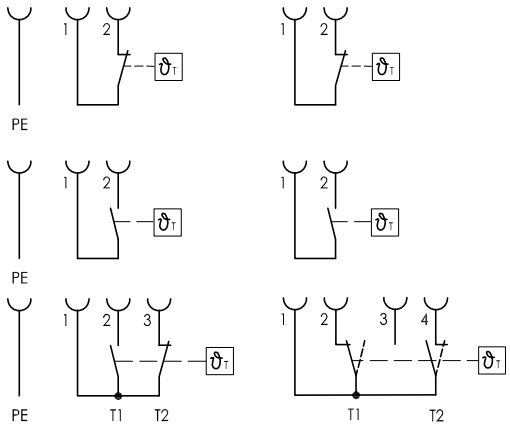

Function with increasing temperature

Order code

Specimen order

TRW - G 1/2" - PN 16 - MS - T70Ö - 24V - 200 - 3+PE

Connection
G1/2"
G3/4"
G1"
M20
M24

Operating pressure
PN 16
PN 250

Execution
MS = Brass
VA = stainless steel

Thermal contact
T10Ö
T40Ö
T50Ö
T60Ö (S)
T70Ö (S) (Ö preferred)
T80Ö (S)
T90Ö
Indicate T1... - T2... for two thermal contacts

Other temperature available on request

Operating voltage
VDC 10-36 = 24V
VAC 10-230 = 230V

EL = length of immersion tube (mm) 50
100
200
300
400
500
800
1000

Plug socket connector
3+PE
3 Polig + PE
M12 - 24V

Connector variants

3+PE
EN 175301-803
(DIN 43650)
IP 65

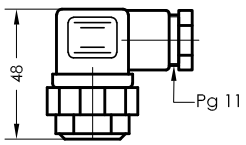

3 polig + PE
IP67

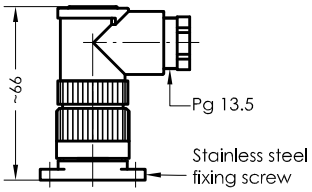

Serie M12
IP 67

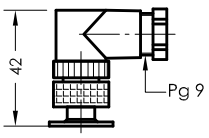

ET= Minimum immersion depth of sensor in medium for precise scanning.

Technical data

Description

Temperature monitors are used for monitoring temperatures in tanks and pipelines.

The permanently adjusted bimetal contact opens or closes with a rise of temperature and automatically returns to the normal contact position with a change of temperature.

The device must only be installed by specialists.

Technical data

Measuring tube	Brass - Stainless steel
Connecting thread	PN 16 - Ms G1/2" SW27 Ms G3/4" SW32 Ms G1" SW41 Ms M20 x 1,5 SW27 Ms M24 x 1,5 SW32 PN 250 - Edelstahl G1/2" SW27
Measuring inset	- Edelstahl G1/2" SW27
	Thermal contact (Bimetal)

GOLDAMMER
REGELUNGSTECHNIK GMBH

SCHÖLLERSHEIDER STR. 15
P.O.BOX 10 02 17
D-40802 METTMANN

PHONE (49) 2104/12093
FAX (49) 2104/12028
www.Goldammer-Regelungstechnik.com

TRW - NR 25 ...

Temperature monitor

serial No.	Date
TR-GB- 508	03/17

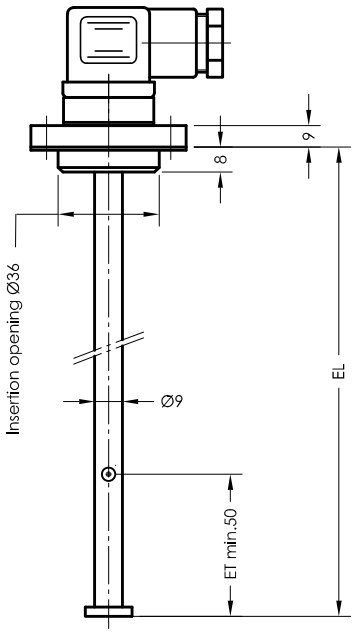

Pin assignment

Plug securing

Break/Make

DIN 43650 3+PE
3 Polig + PE

Serie M12/24V

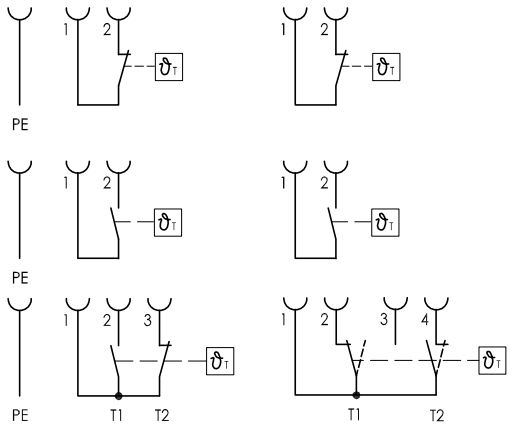

Order code

Specimen order

TRW - NR25 - I - T70Ö - MS - 24V - 200 - 3+PE

Flange I
Flange II

Thermal contact
T10Ö
T40Ö
T50Ö
T60Ö (S) (Ö
T70Ö (S) preferred)
T80Ö (S)
T90Ö
Indicate T1... - T2... for two thermal contacts
Other temperature available on request
Function with increasing temperature

Execution
MS = Brass

Operating voltage
VDC 10-36 = 24V
VAC 10-230 = 230V

EL = length of immersion tube (mm) 50, 100, 200, 300, 400, 500, 800, 1000

Plug socket connector
3+PE
3 Polig + PE
M12 - 24V

Flange I

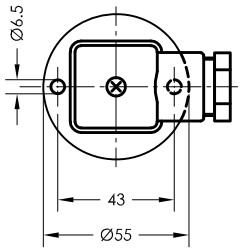

Flange II

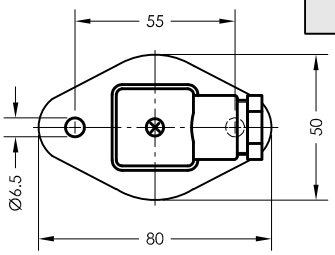

Connector variants

3+PE
EN 175301-803
(DIN 43650)
IP 65

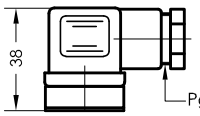

Serie M12
IP 67

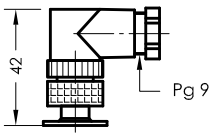

Technical data

Description

Temperature monitors are used for monitoring temperatures in tanks and pipelines.

The permanently adjusted bimetal contact opens or closes with a rise of temperature and automatically returns to the normal contact position with a change of temperature.

The device must only be installed by specialists.

Max. viscosity ISO VG 68

Technical data

Switching tube	Brass, max.L = 500mm
Connection flange	Aliminium / Polyamide, with flat seal
Nominal pressure	1 bar max.
Temperature of medium	80°C max.
Operating voltage	230V AC max.
Switching current	0,5A max.
Switching potential	10 W/VA max.
Thermal elements	Pt100, thermal contact
Thermal conduct	Hysteresis 1K
Measuring inset	Thermal contact (bimetal, gold plated)
Switching potential max.	2A
Switching accuracy max.	±3k
Switching difference max.	1k
Ambient temperature max.	-40°C to +100°C

GOLDAMMER
REGELUNGSTECHNIK GMBH
SCHÖLLERSHEIDER STR. 15
P.O.BOX 10 02 17
D-40802 METTMANN
PHONE (49) 2104/12093
FAX (49) 2104/12028
www.Goldammer-Regelungstechnik.com

Indicator temperature-electronic-regulator

serie IND

- indicator with 3 adjustable temperatures, optional with 4 – 20mA or Pt100 output and LED display
- temperature transducer with 4-20mA output and LED display
- optional stainless steel version
- optional all executions also with remote installation

Indicator - T

Temperature - electronic - regulator with PNP switching outputs and LED temperature display - optional output 4-20mA

serial No.	Date
IND-GB- 600	03/18

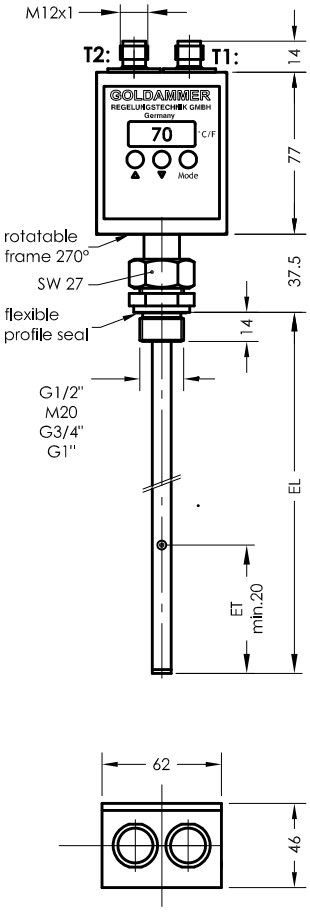

ET= Minimum immersion depth of sensor in medium for precise scanning.

Pin assignment

Plug securing

T1: 1 = +12V - 30V DC
3 = GND - Indication
4 = Temperature T1 PNP
2 = Temperature T2 PNP (TF)
5 = Temperature T3 PNP (TF)

PNP Output freely programmable

T2: 1 = +12V-30V DC
2 = Temperature 4-20mA

Order code

Specimen order

G1/2"-T-L100-T2-VA-2M12-TF70Ö-4-20mA

G1/2"
M20
G3/4"
G1"

Probe bush EL (mm)
Standard length
100
200
300
Variale 50 - 1000mm

Switching output
T1
T2
T3

Execution
MS = Brass
VA = stainless steel

1M12
2M12

Thermal contact / Fixed conta
TF10Ö
TF40Ö
TF50Ö
TF60Ö (S)
TF70Ö (S)
TF80Ö (S)
TF90Ö
(Ö preferred)

Output 4-20mA

Technical data

Description

The temperature electronic regulator Indicator-T is a microprocessor controlled regulator with high measuring accuracy. The measurement with a Pt100 ensures high measuring accuracy.
It is equipped with up to 3 adjustable switching outputs. The outputs of T1 and T2 are designed as normally open contacts, of T3 for open circuit monitoring as a normally closed contact.
Optionally, a safety thermal contact can be fitted as fixed contact, and 4-20mA output.
Components that affect safety conform with VDE and UL requirements; the voltage supply input is protected against polarity reversal.

The device must only be installed by specialists.

Other temperature ranges on request.

Technical data

Sensor sleeve	Brass / Stainless steel
Connection	Brass / Stainless steel
Nominal pressure	Ms 16 bar, VA 250 bar
Connection housing	PC, IP67
Display	Three-digit LED -10 - 100 °C (°F)
Temperature exits	max. 3 adjustable T1=S, T2=S, T3=Ö Main setting optionally output 4-20mA = 0-100°C
Connection	M12 IP67 series - male connector
Thermoelement	Pt 100
Operating voltage	12V - 30V DC
Switching current	1A max.
Mounting position	arbitrary
*Thermal contact	Sheet TR-GB-507
*Thermal indicator	Sheet IND-GB

GOLDAMMER
REGELUNGSTECHNIK GMBH

SCHÖLLERSHEIDER STR. 15 PHONE (49) 2104/12093
P.O.BOX 10 02 17 FAX (49) 2104/12028
D-40802 METTMANN www.Goldammer-Regelungstechnik.com

Indicator - T - R (remote installation)

Temperature - electronic - regulator

serial No.	Date
IND-GB- 601	05/19

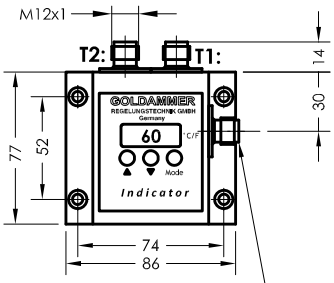

Pin assignment

Plug securing

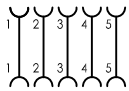

Plug securing

T1: 1 = +12V - 30V DC
3 = GND - Indication
4 = Temperature T1 PNP
2 = Temperature T2 PNP (TF)
5 = Temperature T3 PNP (TF)

PNP Output freely programmable

T2: 1 = +12V-30V DC
2 = Temperature 4-20mA

Plug socket connector serie M12
Wire length max. 5 meter 0.5 sq.mm

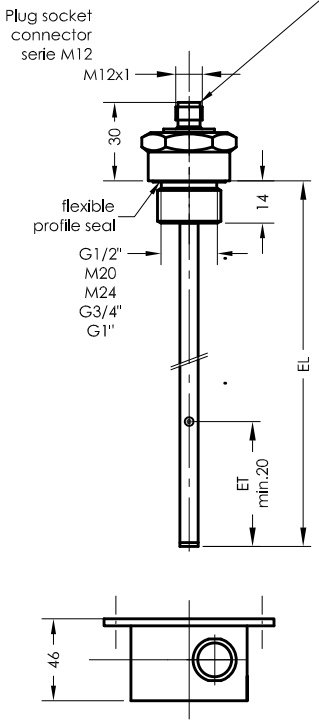

ET= Minimum immersion depth of sensor in medium for precise scanning.

Order code

Specimen order

G1/2" T-R-L100-T2-VA-3M12-TF70Ö

G1/2"
M20
M24
G3/4"
G1"

Probe bush EL (mm)
Standard length
100
200
300
Variable 50 - 1000mm

Switching output
T1
T2
T3

Execution
MS = Brass
VA = stainless steel

3M12
4M12

Thermal contact
TF10Ö
TF40Ö
TF50Ö
TF60Ö (S) (Ö preferred)
TF70Ö (S)
TF80Ö (S)
TF90Ö

Equipment

Art. Nr. 50100080 - connecting wire circuit serie M12 with 2 cable sockets 5-pole length 3m
Art. Nr. 50100076 - connecting wire circuit serie M12 with 2 cable sockets 5-pole length 5m

Other length available on request

Technical data

Description

The temperature electronic regulator Indicator T-R (remote installation) is a microprocessor controlled regulator with high measuring accuracy. Measurement with a Pt100 in a three-wire system ensures high measuring accuracy.
It is equipped with up to 3 adjustable switching outputs. The outputs of T1 and T2 are designed as normally open contacts, of T3 for open circuit monitoring as a normally closed contact. Other switching functions are also available on request. Components that affect safety conform with VDE and UL requirements, the voltage supply input is protected against polarity reversal.

The device must only be installed by specialists.

other temperature ranges are available.

Technical data

Sensor sleeve	Brass / Stainless steel
Connection	Brass / Stainless steel
Nominal pressure	Ms 16 bar, VA 250 bar
Connection housing	PC, IP67
Display	Three-digit LED -10 - 200 °C (°F)
Temperature exits	max. 3 adjustable T1=S, T2=S, T3=Ö Main setting
Connection	M12 IP67 series - male connector
Thermoelement	Pt 100
Operating voltage	12V - 30V DC
Mounting position	arbitrary
*Thermal contact	Sheet TR-GB-507
*Thermal indicator	Sheet IND-GB

GOLDAMMER
REGELUNGSTECHNIK GMBH
SCHÖLLERSHEIDER STR. 15
P.O.BOX 10 02 17
D-40802 METTMANN
PHONE (49) 2104/12093
FAX (49) 2104/12028
www.Goldammer-Regelungstechnik.com

Indicator - TA - Pt 100 ...

Resistance thermometer and LED temperature display

serial No. Date
IND-GB- 601/1 03/18

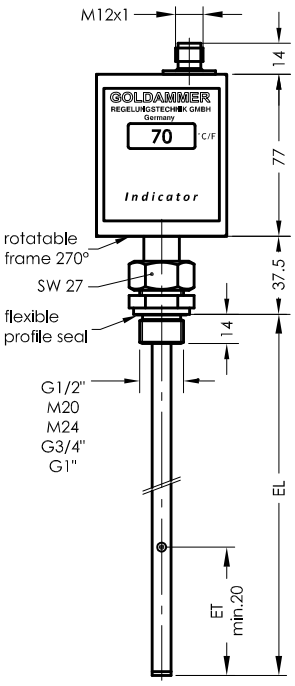

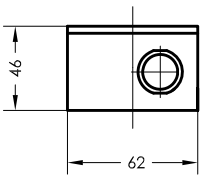

ET= Minimum immersion depth of sensor in medium for precise scanning.

Pin assignment

Plug securing

1 = +12-30V DC
3 = GND - Indication

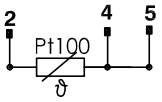

3 - Conductor

Order code

Specimen order

G1/2" - TA - L100 - Pt 100 - MS - 1M12

G1/2"
M20
M24
G3/4"
G1"

Probe bush EL (mm)
Standard length
100
200
300
Variable 50 - 1000mm

Pt 100
Pt 1000

Execution
MS = Brass
VA = stainless steel

Technical data

Description

The resistance thermometer is used for direct temperaturmeasurement between -48°C up to 120°C. The usage of resistance thermometers display and control devices is possible due to the use base values which are standardized.

The temperature indication is by means of an electronic circuit with an LED display that indicates the actual temperature, optionally in °C or °F.

The device must only be installed by specialists.

Other temperature ranges on request.

Technical data

Sensor sleeve	Brass / Stainless steel
Connection	Brass / Stainless steel
Nominal pressure	PN 16 / MS PN 250 / VA
Connection housing	PC, IP67
Display	Three-digit LED -10 - 100 °C (°F)
Connection	M12 IP67 series - male connector
Measuring insert	Pt 100 / Pt 1000 DIN EN 60751
Operating voltage	12V - 30V DC
Mounting position	Arbitrary

GOLDAMMER
REGELUNGSTECHNIK GMBH
SCHÖLLERSHEIDER STR. 15 PHONE (49) 2104/12093
P.O.BOX 10 02 17 FAX (49) 2104/12028
D-40802 METTMANN www.Goldammer-Regelungstechnik.com

Indicator - TA - 4-20mA

Temperature - electronic - regulator

serial No.	Date
IND-GB- 602	09/19

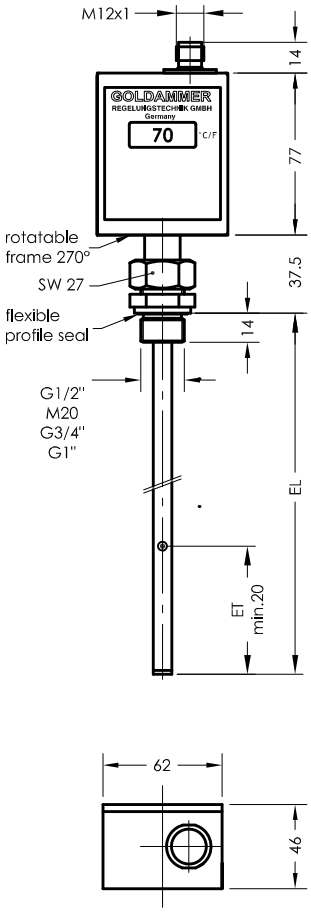

ET= Minimum immersion depth of sensor in medium for precise scanning.

Pin assignment

Plug securing

combined

1 = +12-30V DC
2 = temperature 4 - 20mA
3 = GND - Indication

separate

1 = +12-30V DC
2 = temperature 4 - 20mA
3 = GND - Indication
4 = +12-30V DC - Indication

Order code

Specimen order

G1/2" - TA - L100 - 4-20mA - MS - 0 - 1M12

G1/2"
M20
G3/4"
G1"

Probe bush EL (mm)
Standard length
100
200
300
Variable 50 - 1000mm

0 = combined
1 = separate

Execution
MS = Brass
VA = stainless steel

Technical data

Description

The temperature transducer Indicator-TA can easily be installed without line compensation.
The temperature dependent signal emitted from a Pt100 resistor mounted in the sensor tip is converted with the transducer installed in the measuring tube of the sensor into a temperature-linear current change of 4-20 mA.

The temperature indication is by means of an electronic circuit with an LED display that indicates the actual temperature, optionally in °C or °F.

The device must only be installed by specialists.

Other temperature ranges on request.

Technical data

Sensor sleeve	Brass / Stainless steel
Connection	Brass / Stainless steel
Nominal pressure	PN 16 / MS
Connection housing	PN 250 / VA
Display	PC, IP67
	Three-digit LED
Connection	-10 - 200 °C (°F)
Measuring range	M12 IP67 series - male connector
Thermoelement	4-20 mA = 0-100°C
Working resistance	Pt 100
	RB = U-12V / 20mA
Operating voltage	12V - 30V DC
Mounting position	arbitrary

GOLDAMMER
REGELUNGSTECHNIK GMBH

SCHÖLLERSHEIDER STR. 15 PHONE (49) 2104/12093
P.O.BOX 10 02 17 FAX (49) 2104/12028
D-40802 METTMANN www.Goldammer-Regelungstechnik.com

Indicator - TA - R - 4-20mA (remote installation)

Temperature transducer with 4-20mA and LED temperature display

serial No.	Date
IND-GB- 602/a	09/19

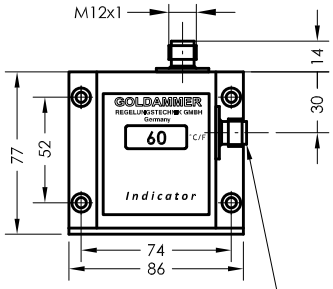

Plug socket connector serie M12
Wire length max. 5 meter 0.5 sq.mm

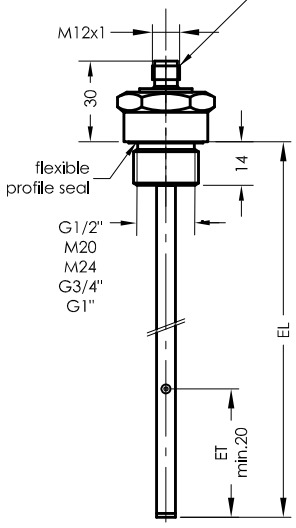

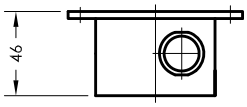

ET= Minimum immersion depth of sensor in medium for precise scanning.

Pin assighnment

Plug securing

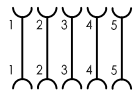

Plug securing

combined

1 = +12-30V DC
2 = temperature 4 - 20mA
3 = GND - Indication

separate

1 = +12-30V DC
2 = temperature 4 - 20mA
3 = GND - Indication
4 = +12-30V DC - Indication

Order code

Specimen order

G1/2" - TA - R - L100 - 4-20mA - MS - 0 - 3M12

G1/2"
M20
M24
G3/4"
G1"

Probe bush EL (mm)
Standard length
100
200
300
Variable 50 - 1000mm

0 = combined
1 = separate

Execution
MS = Brass
VA = stainless steel

Equipment

Art. Nr. 50100080 - connecting wire circuit serie M12 with 2 cable sockets 5-pole length 3m
Art. Nr. 50100076 - connecting wire circuit serie M12 with 2 cable sockets 5-pole length 5m
Other length available on request

Technical data

Description

The temperature transducer Indicator-TA-R - 4- 20mA - 100°C (remote installation) can easily be installed without line compensation.
The temperature dependent signal emitted from a Pt100 resistor mounted in the sensor tip is converted with the transducer installed in the measuring tube of the sensor into a temperature-linear current change of 4-20 mA.
Electrical connection to the voltage supply and to one or several controllers, stored program controller or measuring instruments must be made with no shielded cable for interference free data signal transmission for all electronic areas.
The temperature indication is by means of an electronic circuit with an LED display that indicates the actual temperature, optionally in °C or °F.

The device must only be installed by specialists.

Other temperature ranges on request.

Technical data

Sensor sleeve	Brass, Stainless steel
Connection	Brass, Stainless steel
Nominal pressure	PN 250
Connection housing	PC, IP67
Display	Three-digit LED
Temperature range	-10 - 200 °C / (°F)
Connection	M12 IP67 series - male connector
Measuring range	4-20 mA = 0 - 100°C
Thermoelement	Pt 100
Working resistance	$RB = \frac{U-12V}{20mA}$
Operating voltage	12V - 30V DC
Installed position	arbitrary

GOLDAMMER
REGELUNGSTECHNIK GMBH
SCHÖLLERSHEIDER STR. 15
P.O.BOX 10 02 17
D-40802 METTMANN
PHONE (49) 2104/12093
FAX (49) 2104/12028
www.Goldammer-Regelungstechnik.com

Indicator - TA - 4-20mA - 150°C max.

Temperature - electronic - regulator

serial No.	Date
IND-GB- 602/1	06/19

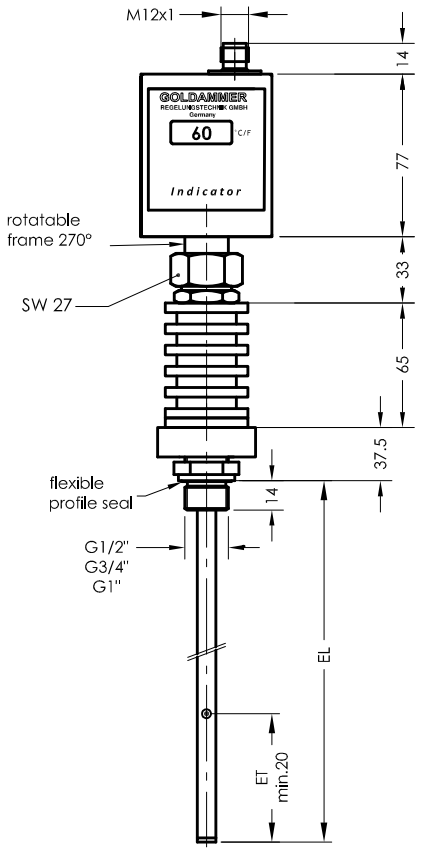

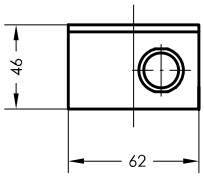

ET= Minimum immersion depth of sensor in medium for precise scanning.

Pin assignment

Plug securing

combined

1 = +12-30V DC
2 = temperature 4 - 20mA
3 = GND - Indication

separate

1 = +12-30V DC
2 = temperature 4 - 20mA
3 = GND - Indication
4 = +12-30V DC - Indication

Order code

Specimen order

G1/2"- T- L100 - 4-20mA- VA - 0 - 1M12 - 0-150°C

G1/2"
G3/4"
G1"

0 = combined
1 = separate

Execution
VA = stainless steel

Probe bush EL (mm)
Standard length
100
200
300
Variable 50 - 1000mm

Technical data

Description

The temperature transducer Indicator-TA - 4 - 20mA 150°C can easily be installed without line compensation.
The temperature dependent signal emitted from a Pt100 resistor mounted in the sensor tip is converted with the transducer installed in the measuring tube of the sensor into a temperature-linear current change of 4-20 mA.

The temperature indication is by means of an electronic circuit with an LED display that indicates the actual temperature, optionally in °C or °F.

The device must only be installed by specialists.

Other temperature ranges on request.

Technical data

Sensor sleeve	Stainless steel
Connection	Stainless steel
Nominal pressure	PN 250
Connection housing	PC, IP67
Display	Three-digit LED -10 - 200 °C (°F)
Connection	M12 IP67 series - male connector
Measuring range	4-20 mA = 0-160°C
Thermoelement	Pt 100
Working resistance	RB = $\frac{U-12V}{20mA}$
Operating voltage	12V - 30V DC
Mounting position	arbitrary

GOLDAMMER
REGELUNGSTECHNIK GMBH

SCHÖLLERSHEIDER STR. 15
P.O.BOX 10 02 17
D-40802 METTMANN

PHONE (49) 2104/12093
FAX (49) 2104/12028
www.Goldammer-Regelungstechnik.com

Indicator - TA - R - 4-20mA - 150°C max. (remote installation)

Temperature transducer with 4-20mA and LED temperature display

serial No.	Date
IND-GB- 603	05/19

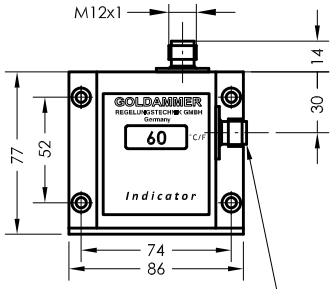

Plug socket connector serie M12
Wire length max. 5 meter 0.5 sq.mm

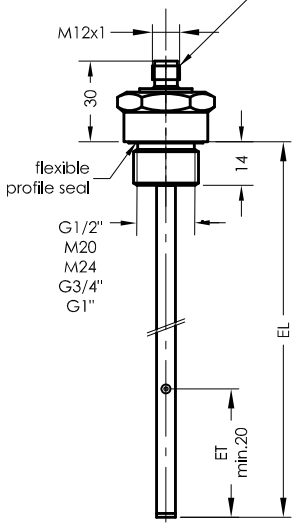

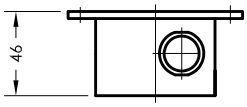

ET= Minimum immersion depth of sensor in medium for precise scanning.

Pin assighnment

Plug securing

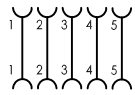

Plug securing

combined

1 = +12-30V DC
2 = temperature 4 - 20mA
3 = GND - Indication

separate

1 = +12-30V DC
2 = temperature 4 - 20mA
3 = GND - Indication
4 = +12-30V DC - Indication

Order code

Specimen order

G1/2" - TA - R - L100 - 4-20mA - MS - 0 - 1M12 - 150°C

G1/2"
M20
M24
G3/4"
G1"

Probe bush EL (mm)
Standard length
100
200
300
Variable 50 - 1000mm

0 = combined
1 = separate

Execution
MS = Brass
VA = stainless steel

Equipment

Art. Nr. 50100080 - connecting wire circuit serie M12 with 2 cable sockets 5-pole length 3m
Art. Nr. 50100076 - connecting wire circuit serie M12 with 2 cable sockets 5-pole length 5m
Other length available on request

Technical data

Description

The temperature transducer Indicator-TA-R - 4- 20mA - 150°C (remote installation) can easily be installed without line compensation.
The temperature dependent signal emitted from a Pt100 resistor mounted in the sensor tip is converted with the transducer installed in the measuring tube of the sensor into a temperature-linear current change of 4-20 mA.
Electrical connection to the voltage supply and to one or several controllers, stored program controller or measuring instruments must be made with no shielded cable for interference free data signal transmission for all electronic areas.
The temperature indication is by means of an electronic circuit with an LED display that indicates the actual temperature, optionally in °C or °F.

The device must only be installed by specialists.

Other temperature ranges on request.

Technical data

Sensor sleeve	Stainless steel
Connection	Stainless steel
Nominal pressure	PN 250
Connection housing	PC, IP67
Display	Three-digit LED
Temperature range	-10 - 200 °C / (°F)
Connection	M12 IP67 series - male connector
Measuring range	4-20 mA = 0 - 160°C
Thermoelement	Pt 100
Working resistance	$RB = \frac{U-12V}{20mA}$
Operating voltage	12V - 30V DC
Installed position	arbitrary

GOLDAMMER
REGELUNGSTECHNIK GMBH
SCHÖLLERSHEIDER STR. 15
P.O.BOX 10 02 17
D-40802 METTMANN
PHONE (49) 2104/12093
FAX (49) 2104/12028
www.Goldammer-Regelungstechnik.com

Water Indicator

serie WM

- detects water in oil
- density or conductivity measurement
- output signal 4-20 mA / 0-10V
  with LED display
  and optional relay outputs
- optional explosion-proof version
- water indicator for surface mounting available

WM 1 - 24V DC

Water indicator

serial No.	Date
WM-GB- 700	08/11

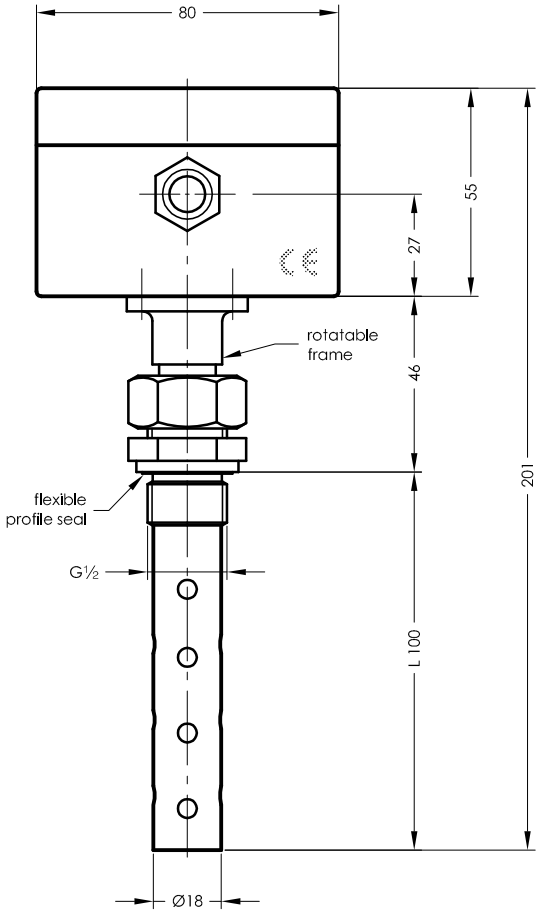

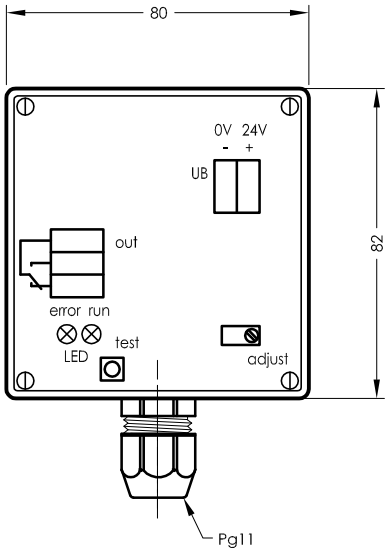

Presentation of contact function
with trouble free operation

The oil grade has to be refered when ordering

Specimen order

WM 1 - L100 - MS - 24V DC

Standard length 100 mm
Special lengths on request
maximum length= 2000 mm

MS
VA

Description

The electronic water indicator is used for the control and regulation of all kinds of liquids and is primarily employed in hydraulic and lubrication oil appliances. This type signal minimal water quantities in oil. Also oil emulsions and other liquid conductive media can be detected on requested. Calibration of device is undertaken at the works; the oil grade has to be refered when ordering.
The device operates on the capacitance principle and emits a signal on detecting a dielectric change. The sensor can be removed from the screw-in type housing by loosening a union nut or rotated through 180°.
Depending on the design of the sensor, parts of less than 2 % water in oil can be signalled.
Electrical connection to the supply system must be made with a shielded cable for interference - free data signal transmission for all electronic areas.

The device must only be installed by specialists.

Technical data

Operating temperature	0 to 100°C
Supply voltage	20-28V DC
Contact output	1 changeover contact 24V, rupturing capacity 5A max.
Electr. connection	Cable thread Pg13,5 + series terminals 1,5 mm²
Sensor housing	Plastic EMV shielded
Protection class	IP 65
Protective tube	Stainless steel / brass
Switching tube	Brass / Stainless steel
Operating pressure	6 bar max.
Power consumption	1,2 W

GOLDAMMER
REGELUNGSTECHNIK GMBH

SCHÖLLERSHEIDER STR. 15 PHONE (49) 2104/12093
P.O.BOX 10 02 17 FAX (49) 2104/12028
D-40802 METTMANN www.Goldammer-Regelungstechnik.com

WM 1 - 230V

Water indicator

serial No.	Date
WM-GB- 701	08/11

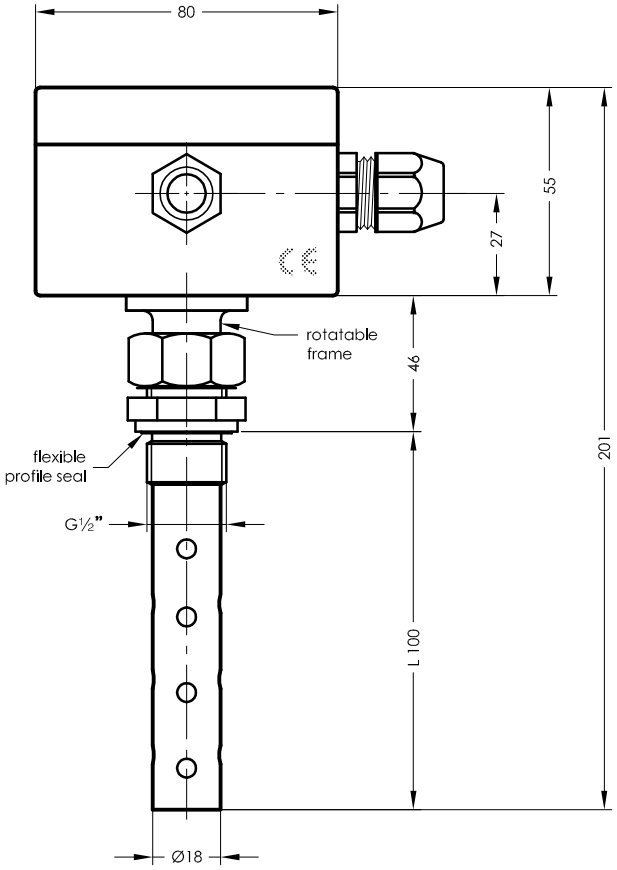

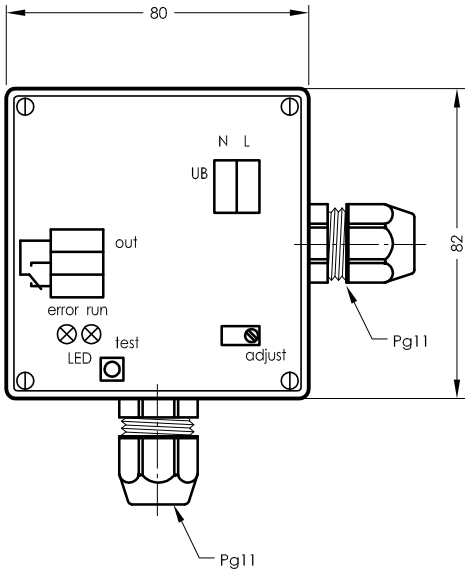

Presentation of contact function
with trouble free operation

The oil grade has to be refered when ordering

Specimen order

WM 1 - L100 - MS- 230V

Standard length 100 mm		
Special lengths on request	MS	115V
maximum length= 2000 mm	VA	230V

Description

The electronic water indicator is used for the control and regulation of all kinds of liquids and is primarily employed in hydraulic and lubrication oil appliances. This type signal minimal water quantities in oil. Also oil emulsions and other liquid conductive media can be detected on requested. Calibration of device is undertaken at the works; the oil grade has to be refered when ordering.
The device operates on the capacitance principle and emits a signal on detecting a dielectric change. The sensor can be removed from the screw-in type housing by loosening a union nut or rotated through 180°. Depending on the design of the sensor, parts of less than 2 % water in oil can be signalled.
Electrical connection to the supply system must be made with a shielded cable for interference - free data signal transmission for all electronic areas.
The device must only be installed by specialists.

Technical data

Operating temperature	0 to 100°C
Supply voltage	115V AC or 230V AC
Contact output	1 changeover contact 250V AC max, rupturing capacity 5A max.
Electr. connection	Cable thread Pg11 + series terminals 1,5 mm²
Sensor housing	Plastic EMV shielded
Protection class	IP 65
Protective tube	Stainless steel / brass
Switching tube	Brass / stainless steel
Operating pressure	6 bar max.

GOLDAMMER
REGELUNGSTECHNIK GMBH

SCHÖLLERSHEIDER STR. 15 PHONE (49) 2104/12093
P.O.BOX 10 02 17 FAX (49) 2104/12028
D-40802 METTMANN www.Goldammer-Regelungstechnik.com

WM 1 - G - 24V DC

Water indicator for surface mounting

serial No.	Date
WM-GB- 702/1	07/17

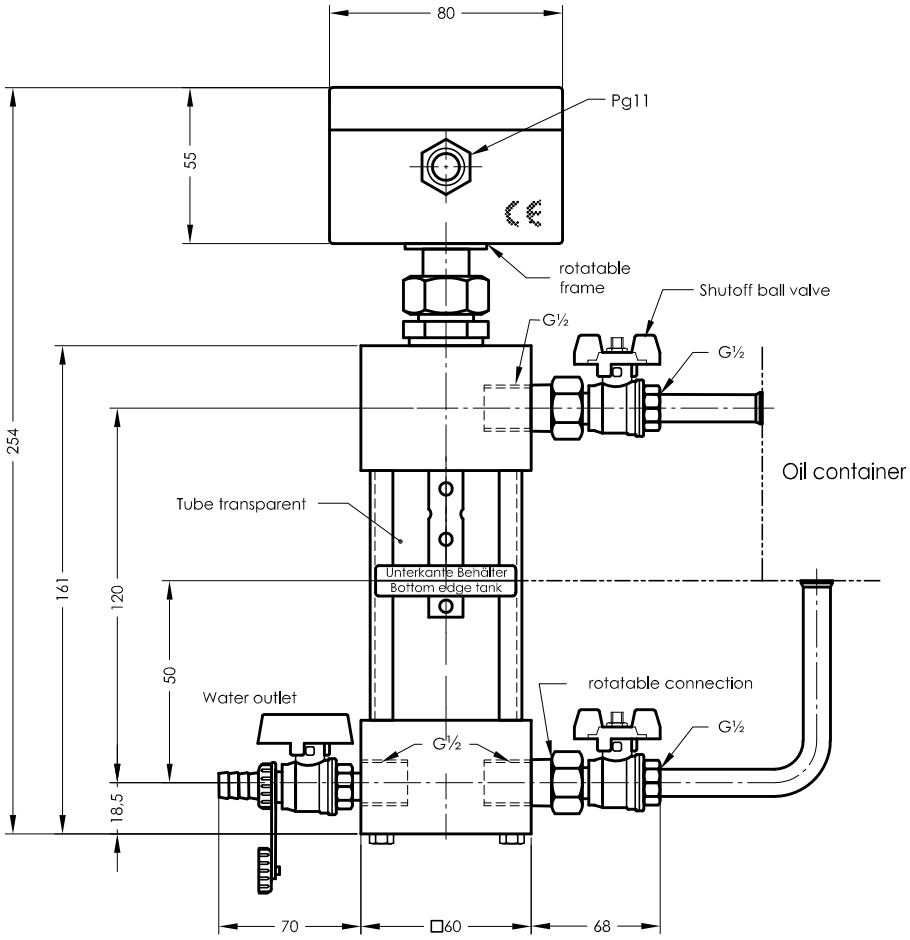

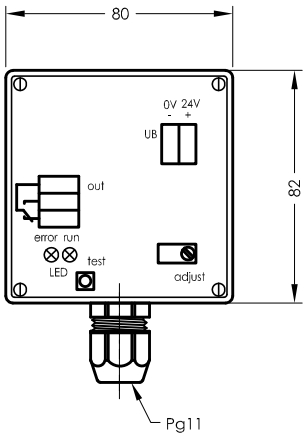

Presentation of contact function with trouble free operation

Specimen order

WM 1 - G - 0 - KU - 24V DC

0= G ½" connection

KU= shutoff ball valve, mounted

The oil grade has to be refered when ordering

Description

The electronic water indicator is used for the control and regulation of all kinds of liquids and is primarily employed in hydraulic and lubrication oil appliances. This type signal minimal water quantities in oil. Also oil emulsions and other liquid conductive media can be detected on requested. Calibration of device is undertaken at the works; the oil grade has to be refered when ordering.
The device operates on the capacitance principle and emits a signal on detecting a dielectric change. The sensor can be removed from the screw-in type housing by loosening a union nut or rotated through 180°.
Depending on the design of the sensor, parts of less than 2% water in oil can be signalled.
Electrical connection to the supply system must be made with a shielded cable for interference - free data signal transmission for all electronic areas.

Technical data

Operating temperature	0 to 100°C
Supply voltage	20-28V DC
Contact output	1 changeover contact 24V, rupturing capacity 5A max.
Electr. connection	Cable thread Pg11 + series terminals 1,5 mm²
Sensor housing	Plastic EMV shielded
Protection class	IP 65
Probe	Brass
Operating pressure	6 bar max.
Adapters	Al
Shutoff valve	Brass
Power consumption	1,2 W

GOLDAMMER
REGELUNGSTECHNIK GMBH

SCHÖLLERSHEIDER STR. 15 PHONE (49) 2104/12093
P.O.BOX 10 02 17 FAX (49) 2104/12028
D-40802 METTMANN www.Goldammer-Regelungstechnik.com

WM 1 - G 3

Water indicator

serial No.	Date
WM-GB- 702a	03/14

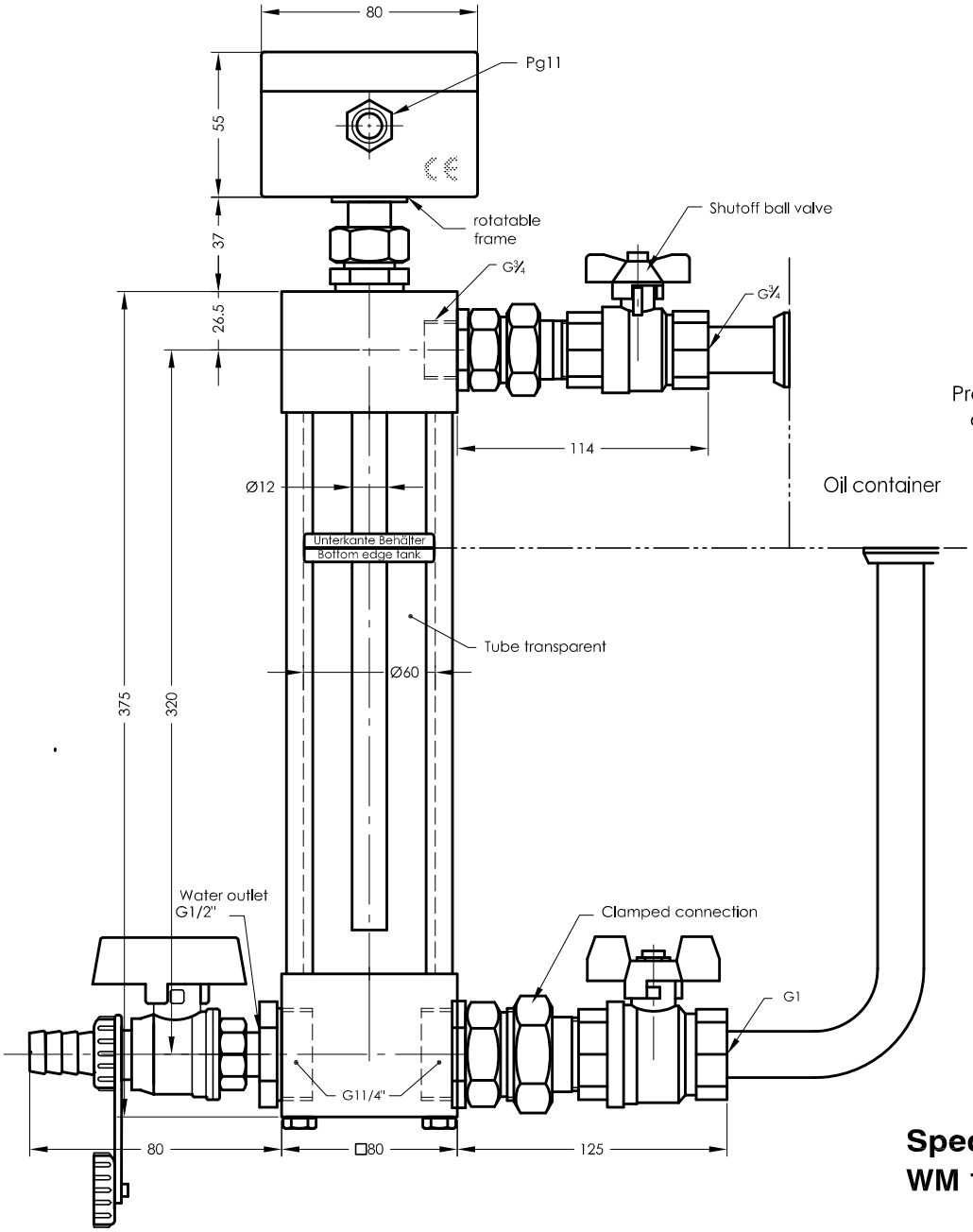

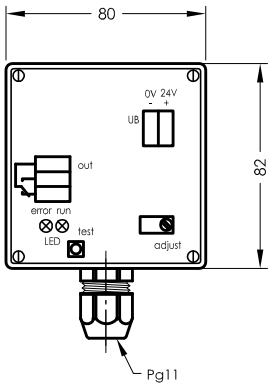

Presentation of contact function during trouble free operation

Specimen order

WM 1 - G3 - KU - 24V DC

KU= shutoff ball valve, mounted

The oil grade has to be refered when ordering

Description

The electronic water indicator is used for the control and regulation of all kinds of liquids and is primarily employed in hydraulic and lubrication oil appliances. This type signals minimal water quantities in oil. Also oil emulsions and other liquid conductive media can be detected on request. Calibration of device is undertaken at the works; the oil grade has to be refered when ordering.
The device operates on the capacity principle and emits a signal on detecting a dielectric change. The sensor can be removed from the screw-in type housing by loosening a union nut or rotated through 180°.
Depending on the design of the sensor, parts of less than 2% water in oil can be signalled.
Electrical connection to the supply system must be made with a shielded cable for interference - free data signal transmission for all electronic areas.
The device has to be installed by specialists only .

Technical data

Operating temperature	0 to 100°C
Supply voltage	20-28V DC
Contact output	1 changeover contact 24V, rupturing capacity 5A max.
Electr. connection	Cable thread Pg11 + series terminals 1,5 mm²
Sensor housing	Plastic EMV shielded
Protection class	IP 65
Probe	Brass
Operating pressure	3 bar max.
Adapters	Al
Shutoff valve	Brass
Power consumption	1,2 W

GOLDAMMER
REGELUNGSTECHNIK GMBH

SCHÖLLERSHEIDER STR. 15 PHONE (49) 2104/12093
P.O.BOX 10 02 17 FAX (49) 2104/12028
D-40802 METTMANN www.Goldammer-Regelungstechnik.com

WM 1 - G - 230V

Water indicator for surface mounting

serial No. Date
WM-GB- 703/1 07/17

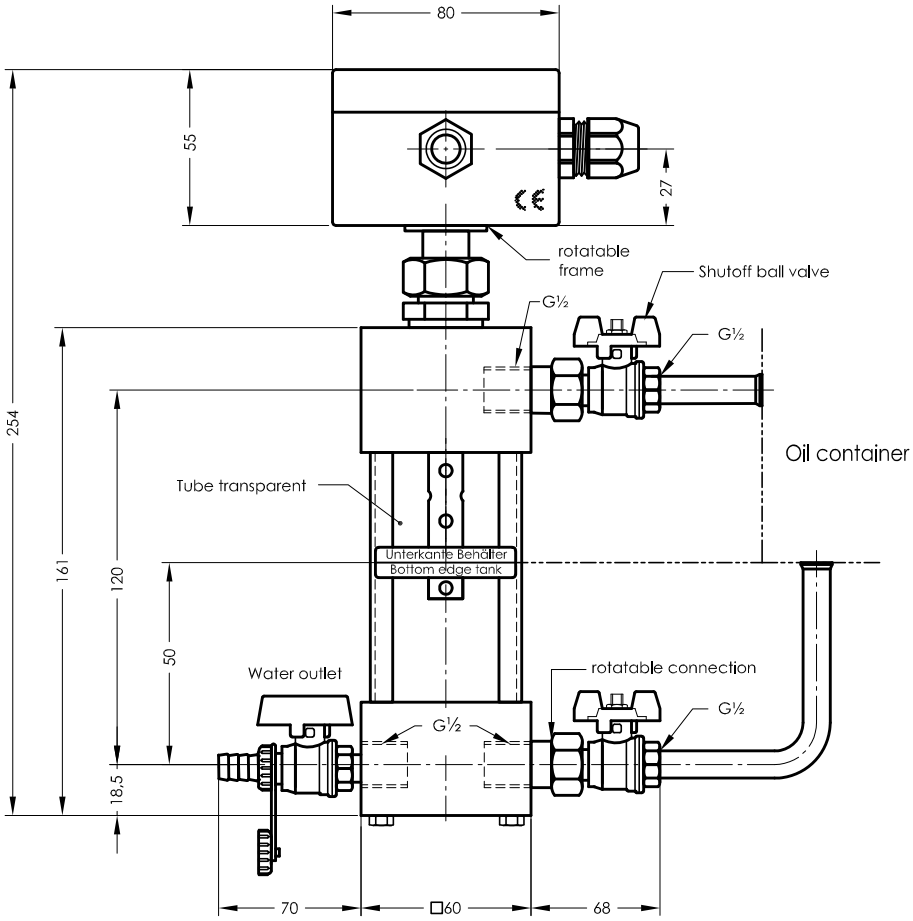

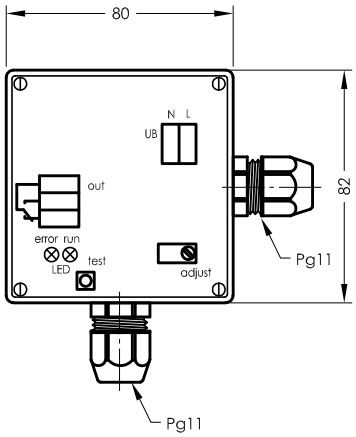

Presentation of contact function with trouble free operation

Specimen order

WM 1 - G - 0 - KU - 230V

0= G ½ connection

115V
230V

KU= shutoff ball valve, mounted

The oil grade has to be refered when ordering

Description

The electronic water indicator is used for the control and regulation of all kinds of liquids and is primarily employed in hydraulic and lubrication oil appliances. This type signal minimal water quantities in oil. Also oil emulsions and other liquid conductive media can be detected on requested. Calibration of device is undertaken at the works; the oil grade has to be refered when ordering.
The device operates on the capacitance principle and emits a signal on detecting a dielectric change. The sensor can be removed from the screw-in type housing by loosening a union nut or rotated through 180°. Depending on the design of the sensor, parts of less than 2% water in oil can be signalled.
Electrical connection to the supply system must be made with a shielded cable for interference - free data signal transmission for all electronic areas.

Technical data

Operating temperature	**0 to 100°C**
Supply voltage	**115V AC or 230V AC**
Contact output	**1 changeover contact 250V AC max, rupturing capacity 5A max.**
Electr. connection	**Cable thread Pg11 + series terminals 1,5 mm²**
Sensor housing	**Plastic EMV shielded**
Protection class	**IP 65**
Probe	**brass**
Operating pressure	**6 bar max.**
Adapters	**Al**
Shutoff valve	**Brass**

GOLDAMMER
REGELUNGSTECHNIK GMBH

SCHÖLLERSHEIDER STR. 15 PHONE (49) 2104/12093
P.O.BOX 10 02 17 FAX (49) 2104/12028
D-40802 METTMANN www.Goldammer-Regelungstechnik.com

WM 12

Water indicator with display 4-20mA

serial No. Date
WM-GB- 703a 07/18

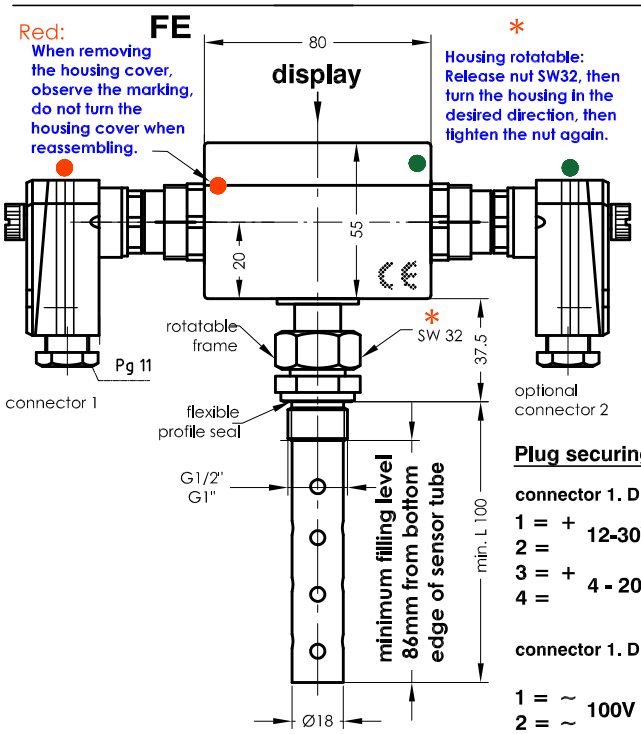

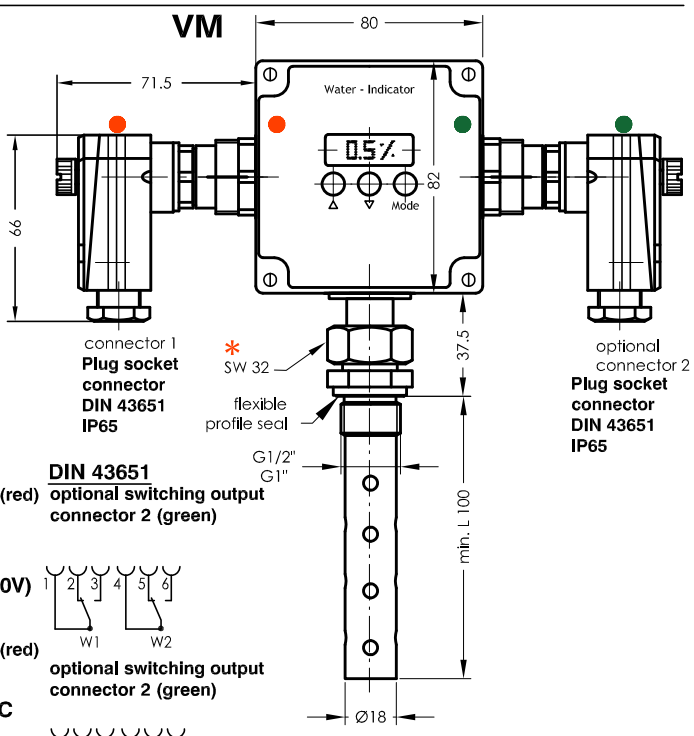

Plug securing

connector 1. DIN 43651 (red)

1 = +
2 =
3 = +
4 =

12-30V DC

4 - 20mA (0-10V)

DIN 43651

optional switching output connector 2 (green)

connector 1. DIN 43651 (red)

1 = ~
2 = ~
3 = +
4 =

100V -240V AC

4 - 20mA (0-10V)

optional switching output connector 2 (green)

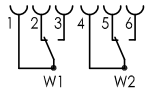

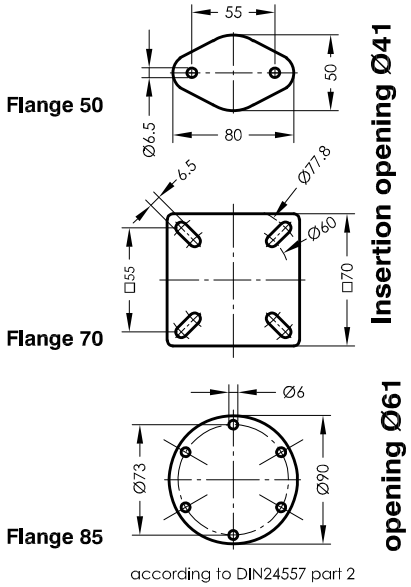

The oil grade has to be refered when ordering

Specimen order

WM 12 - G1/2 - L100 - 24V DC - 4-20mA - I - FE - MS

Connection
G1/2"
G1"
Flange 50
70
85

Total length
(Standard length 100 mm)
max. 2000mm

Operating voltage
24V DC
100V - 240V AC

Measuring range
4 - 20mA
0 - 10V

Contact output
I = 2 contact
II = 0 contacts

Construction
FE= permanent installation
VM= vertical installation

Material
VA = Stainless steel
MS = brass

Description

The electronical water indicator with display is qualified for measurement of the absolute moisture content in hydraulic and lubrication oil appliances.
The continuous monitoring of the moisture content in oil plants happens about the integrated sensor.
Damage is avoided by fast detection of a water entrance. Calibration of device is undertaken at the works; the oil grade has to be refered when ordering.
The evaluation for capacitive measurement takes place by a micro control system and is indicated over a 4 digit LED 7 segment display in %.
The indication of the moisture content takes place linear, smallest indicated water percentage 0.5%, corresponds to 4-20mA or 0-10V.
In addition optionally 2 relay exits are available.
Electrical connection to the supply system must be made with a shielded cable for interference.
The device must be installed by specialists.
The calibration of the water indicator with display can be made by the start-up locally by the specialists.

Technical data

Operating temperature	0 to 80°C
Operating voltage	12-30V DC, 100V -240V AC
Measurement output	4-20mA
Optional	0-10V 2 digital relays switching outputs 24V / 4A, 125V /0,4A (230V / 0,25A)
Display	7 segment-LED-display in % 3 short-travel keys for menu guidance
Sensor housing	Plastic EMV shielded IP65
Sensor	Stainless steel / brass
Operating pressure	10bar max.

GOLDAMMER
REGELUNGSTECHNIK GMBH
SCHÖLLERSHEIDER STR. 15
P.O.BOX 10 02 17
D-40802 METTMANN
PHONE (49) 2104/12093
FAX (49) 2104/12028
www.Goldammer-Regelungstechnik.com

WM 12 - G

Water indicator for surface mounting

serial No. Date
WM-GB- 703b 07/18

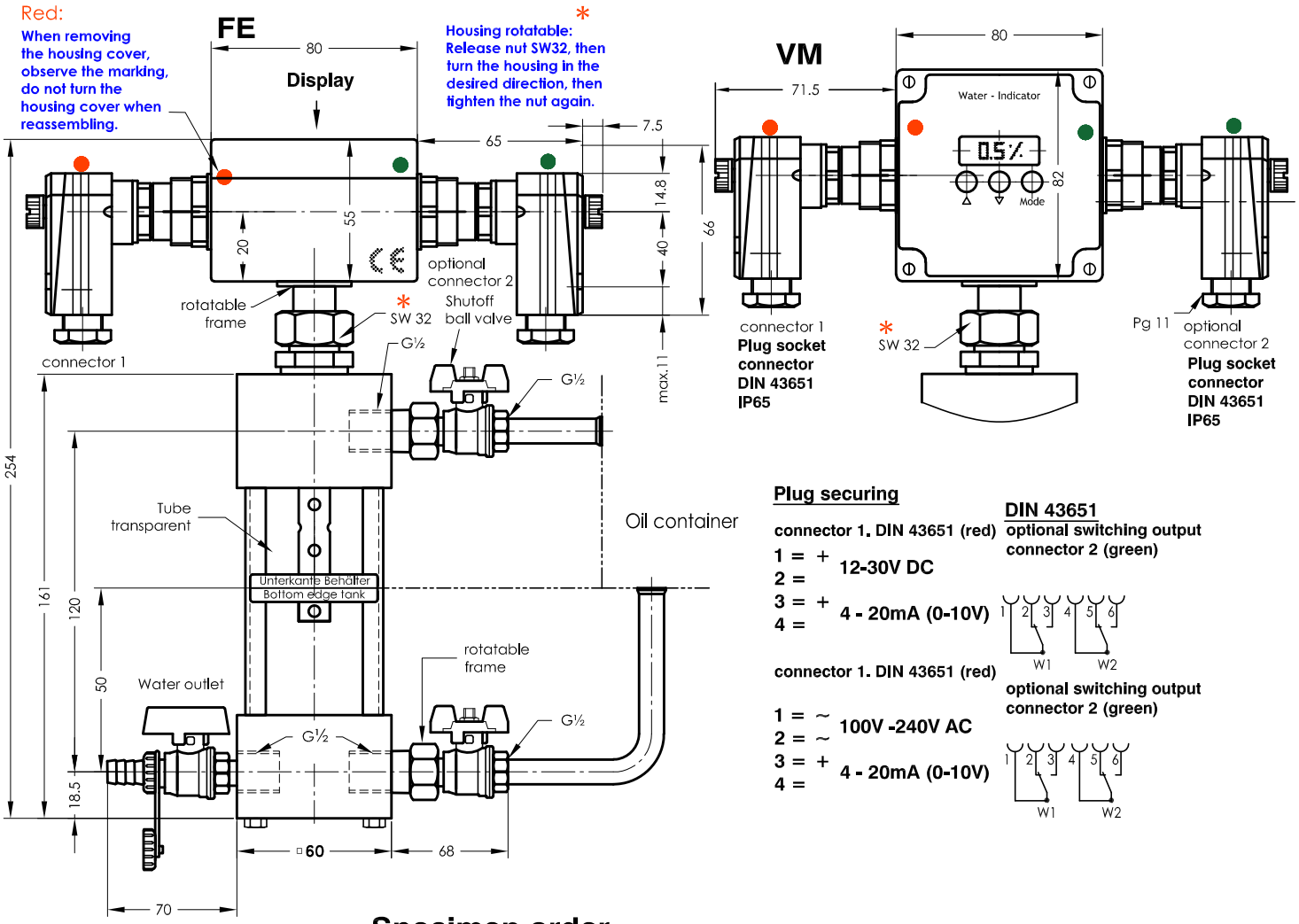

Plug securing

DIN 43651

connector 1. DIN 43651 (red)
1 = +
2 =
3 = +
4 =
12-30V DC
4 - 20mA (0-10V)

optional switching output connector 2 (green)

connector 1. DIN 43651 (red)
1 = ~
2 = ~
3 = +
4 =
100V -240V AC
4 - 20mA (0-10V)

optional switching output connector 2 (green)

Specimen order

WM 12 - G - 24V DC - 4-20mA - I - FE - MS

Operating voltage
24V DC
100V - 240V AC

Measuring range
4 - 20mA
0 - 10V

Material
VA = Stainless steel
MS = brass

Construction
FE= permanent installation
VM= vertical installation

Contact output
I = 2 contact
II = 0 contacts

The oil grade has to be refered when ordering

Description

The electronic water indicator is used for the control and regulation of all kinds of liquids and is primarily employed in hydraulic and lubrication oil appliances. This type signal minimal water quantities in oil. Also oil emulsions and other liquid conductive media can be detected on requested. Calibration of device is undertaken at the works; the oil grade has to be refered when ordering.
The device operates on the capacitance principle and emits a signal on detecting a dielectric change. The sensor can be removed from the screw-in type housing by loosening a union nut or rotated through 180°.
Depending on the design of the sensor, parts of less than 2% water in oil can be signalled.
Electrical connection to the supply system must be made with a shielded cable for interference - free data signal transmission for all electronic areas.

Technical data

Operating temperature	0 to 80°C
Operating voltage	12-30V DC, 100V -240V AC
Measurement output	4-20mA
Optional	0-10V 2 digital relays switching outputs 24V / 4A, 125V /0,4A(230V / 0,25A)
Display	7 segment-LED-display in % 3 short-travel keys for menu guidance
Sensor housing	Plastic EMV shielded IP 65
Sensor	Stainless steel / brass
Operating pressure	10 bar max.
Adapter	Al
Shutoff valve	Bass

GOLDAMMER
REGELUNGSTECHNIK GMBH
SCHÖLLERSHEIDER STR. 15 PHONE (49) 2104/12093
P.O.BOX 10 02 17 FAX (49) 2104/12028
D-40802 METTMANN www.Goldammer-Regelungstechnik.com

WM 2 - G

Water indicator

serial No.	Date
WM-GB- 704	05/13

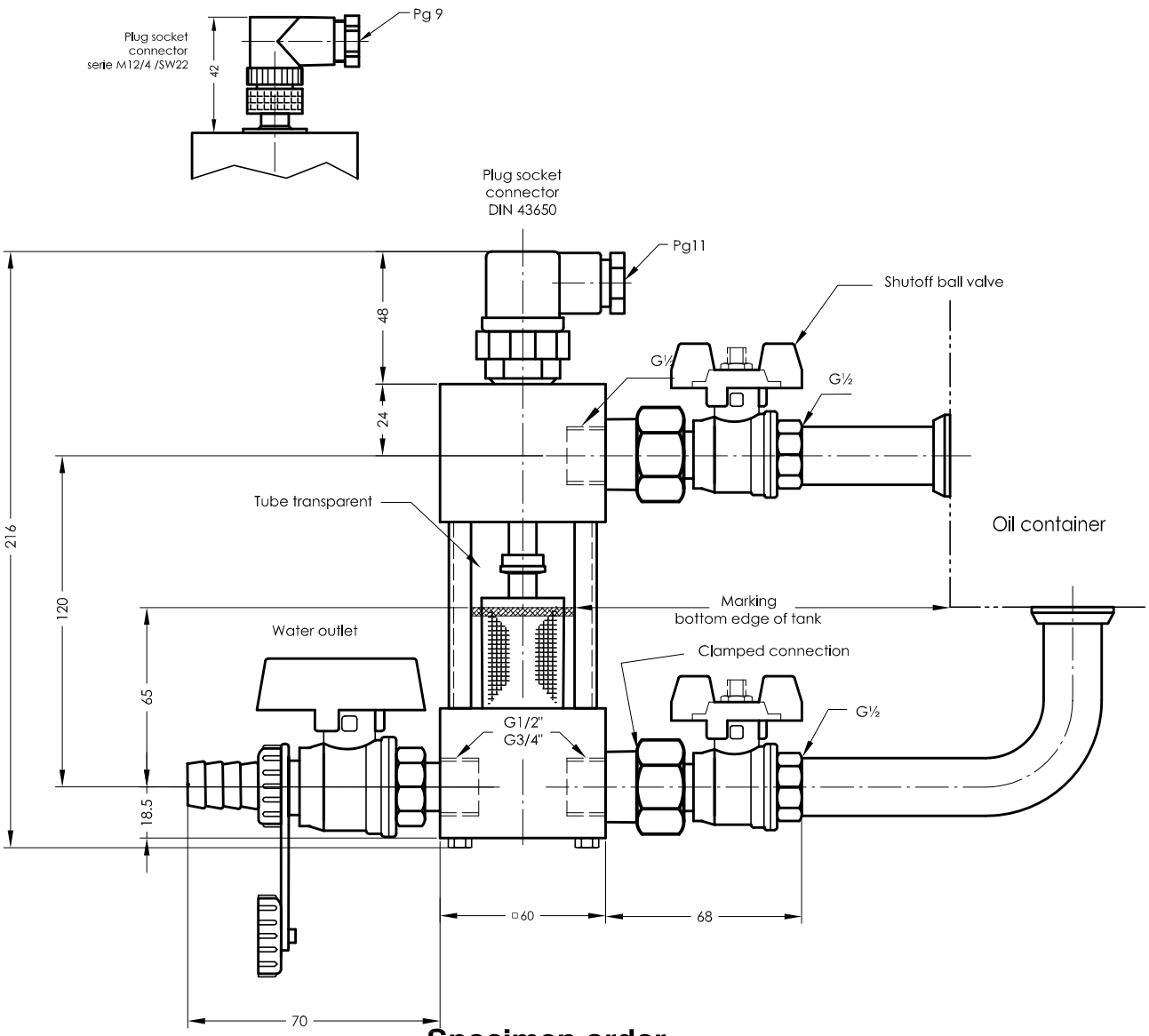

Specimen order

WM 2 - G - 0 - KU - W - DIN 43650

0= G ½ connection

KU= shutoff ball valve, mounted

Switching point
S= make
W= changeover

Plug socket connector
DIN 43650
M12/4

Plug securing

make

changeover

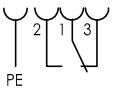

Description

The water indicator is used for the control and regulation of all kinds of liquids and is primarily employed in hydraulic and lubrication oil appliances. This appliance functions according to the principle of separating layer measurement. When the water in the water indicator reaches a level of 30 ml the separating float starts floating and switching a contact (alternatively make or changeover contact).

A visual control through the transparent tube is also possible.

When mounting on the oil container take notice of the marking.

The device must only be installed by specialists.

Technical data

Operating temperature	80°C max.
Operating pressure	6 bar max.
Operating voltage	DIN 43650, 230V max. AC M12/4, 48V max. DC
Current switched	1A max.
Switching capacity	60 W/VA max.
Level contact	Make / changeover
Plug socket connector	DIN 43650 IP65 or serie M12 IP67
Connection	Aluminium
Shutoff valve	Brass
Mounting position	vertical ± 30°

GOLDAMMER
REGELUNGSTECHNIK GMBH

SCHÖLLERSHEIDER STR. 15 PHONE (49) 2104/12093
P.O.BOX 10 02 17 FAX (49) 2104/12028
D-40802 METTMANN www.Goldammer-Regelungstechnik.com

WM 3 - G

Water indicator

serial No.	Date
WM-GB- 706	07/11

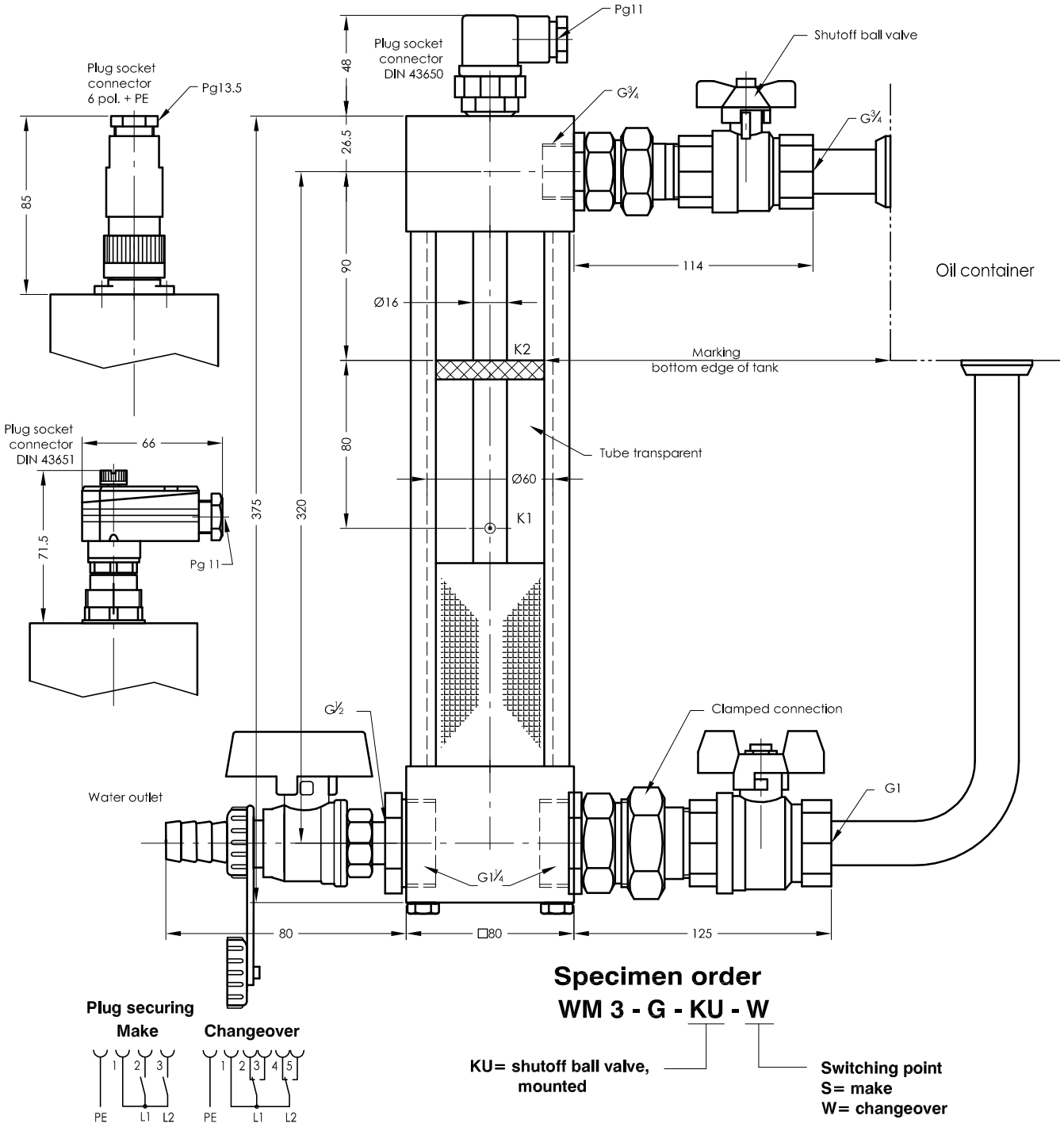

Specimen order

WM 3 - G - KU - W

KU= shutoff ball valve, mounted

Switching point
S= make
W= changeover

Description

The water indicator is used for the control and regulation of all kinds of liquids and is primarily employed in hydraulic and lubrication oil appliances. This appliance functions according to the principle of separating layer measurement. When the water in the water indicator reaches a level of 250 ml the separating float starts floating and switching the contact K1 (warning). When the water reaches a level of 500 ml, switches contact K2.

A visual control through the transparent tube is also possible.

When mounting on the oil container take notice of the marking.

The device must only be installed by specialists.

Technical data

Operating temperature	80°C max.
Operating pressure	3 bar max.
Operating voltage	230V max.
Current switched	1A max.
Switching capacity	20 W/VA max.
Level contact	Make / changeover
Plug socket connector	DIN 43651 or DIN 43650 or 6 pol.+PE IP65
Connection	Aluminium
Shutoff valve	Brass
Mounting position	vertical ± 30°

GOLDAMMER
REGELUNGSTECHNIK GMBH

SCHÖLLERSHEIDER STR. 15
P.O.BOX 10 02 17
D-40802 METTMANN

PHONE (49) 2104/12093
FAX (49) 2104/12028
www.Goldammer-Regelungstechnik.com

WM 3 - G - MA

Water indicator 4-20 mA

serial No.	Date
WM-GB- 707	07/11

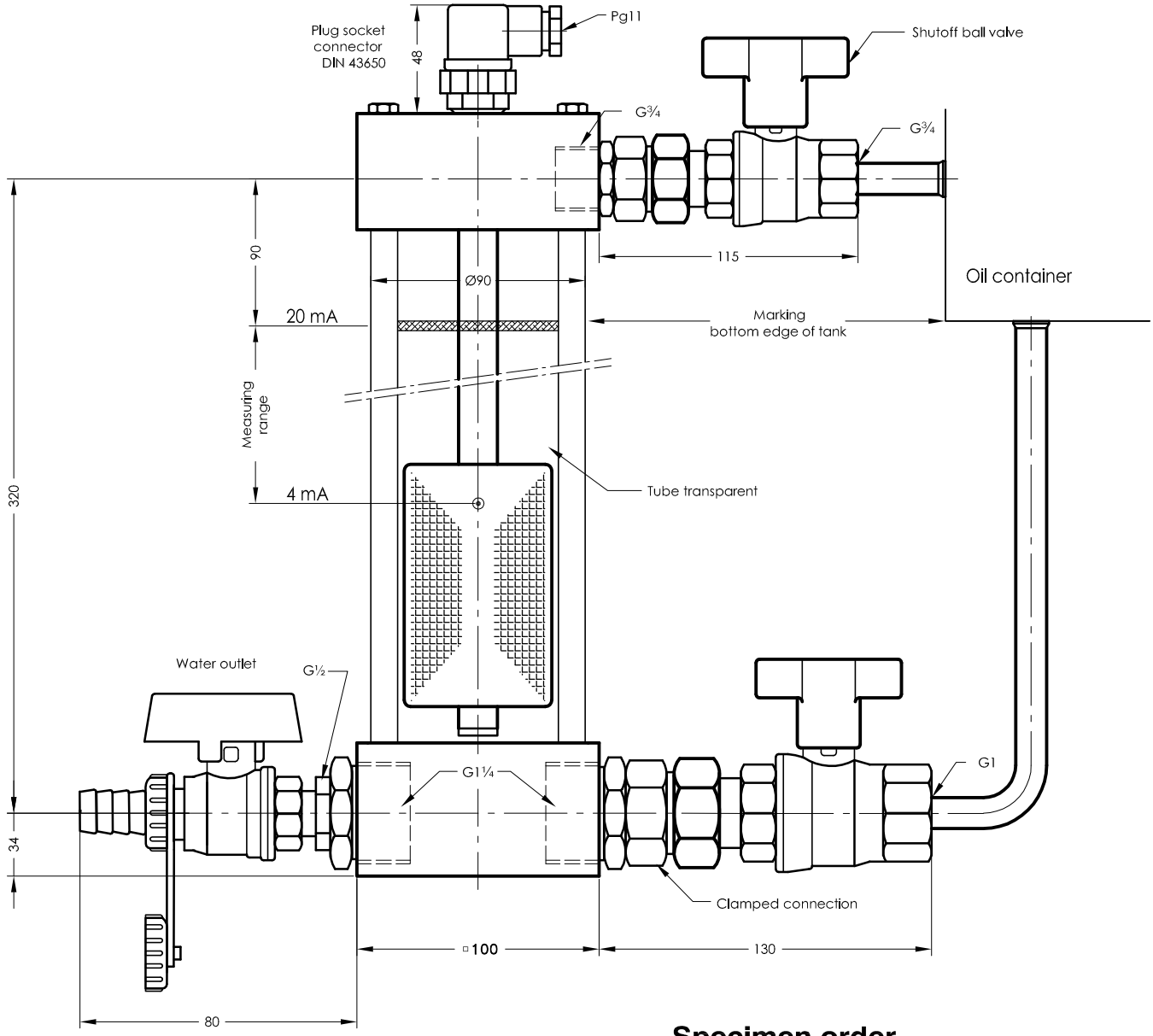

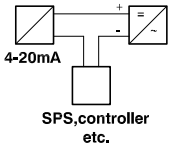

Specimen order

WM 3 - G - MA - KU - 4-20mA

KU= shutoff ball valve, mounted

Description

The water indicator is used for the control and regulation of all kinds of liquids and is primarily employed in hydraulic and lubrication oil appliances. This appliance functions according to the principle of separating layer measurement. The output signal for oil is 4 mA. An intrusion of water adds buoyancy to the interfacial float, thereby causing a volume - dependent, linear current of 4-20 mA, thus making continuous monitoring of the water increase possible.
Electrical connection to the voltage supply and to one or several controllers, stored program controller measuring instruments must be made with a shielded cable for interference-free data signal transmission for all electronic areas. The cable can be of any length.

When mounting on the oil container take notice of the marking.
The device must only be installed by specialists.

Technical data

Operating temperature	80°C max.
Operating pressure	3 bar max.
Operating voltage	12 - 30V DC
Measuring range	4-20 mA
Plug socket connector	DIN 43650 IP65
Connection	Aluminium
Shutoff valve	Brass
Load	RB = $\frac{U-12V}{20mA}$
Mounting position	vertical ± 30°

GOLDAMMER
REGELUNGSTECHNIK GMBH

SCHÖLLERSHEIDER STR. 15 PHONE (49) 2104/12093
P.O.BOX 10 02 17 FAX (49) 2104/12028
D-40802 METTMANN www.Goldammer-Regelungstechnik.com

Function description installation water detector WM1 - WM12

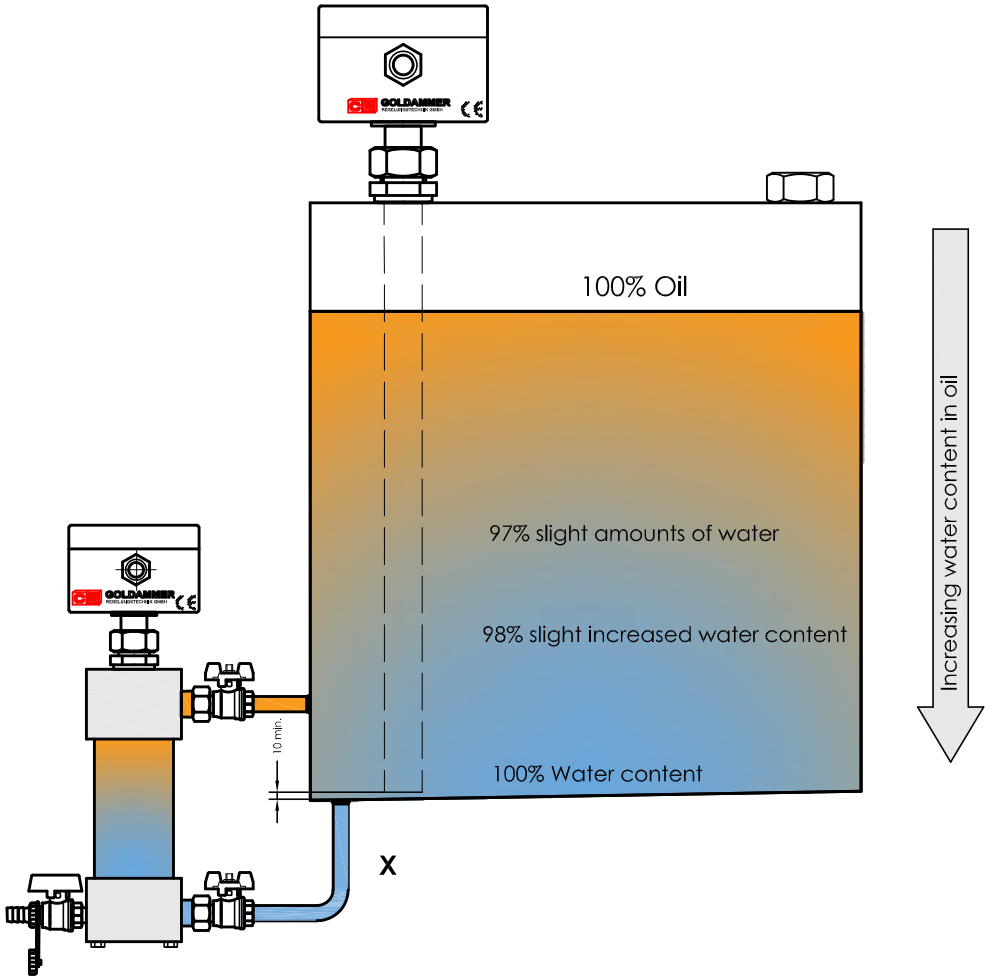

Installation options:

The person or company responsible for the system must secure that:

- Safety and operation instructions are accessible and followed.
- Local accident prevention regulations and standards are obeyed.
- Performance data and installation specifications are regarded.
- Safety devices are installed and recommended maintenance is performed.
- National regulations for disposal of electrical equipment are obeyed.

Installation and start-up

During Installation precaution are to made that the water indicator connection with mark X is installed at the bottom of the tank.

Depending on the execution, the water indicator is capable of indicating the smallest water quantum up <2% water content in oil, but due to the physical difference between water and oil, it is recommended that the container has be in a static installation position for the water indicator to be able to obtain accurate detection.

GOLDAMMER
REGELUNGSTECHNIK GMBH
SCHÖLLERSHEIDER STR. 15
P.O.BOX 10 02 17
D-40802 METTMANN
PHONE (49) 2104/12093
FAX (49) 2104/12028
www.Goldammer-Regelungstechnik.com

Level regulator with ventilation filter

serie BL

- optional with temperature monitoring
- output signal 4-20 mA for level
- output signal 4-20 mA for temperature and level
- optional with optical analogue low pressure gauge
- with adjustable contact cartridge 03 and temperature output 4-20mA
- with output signal 4-20 mA, optional with digital temperature indication

NR - BL - OU

Level - temperature regulator with aeration filter

serial No.	Date
BL-GB- 800	12/18

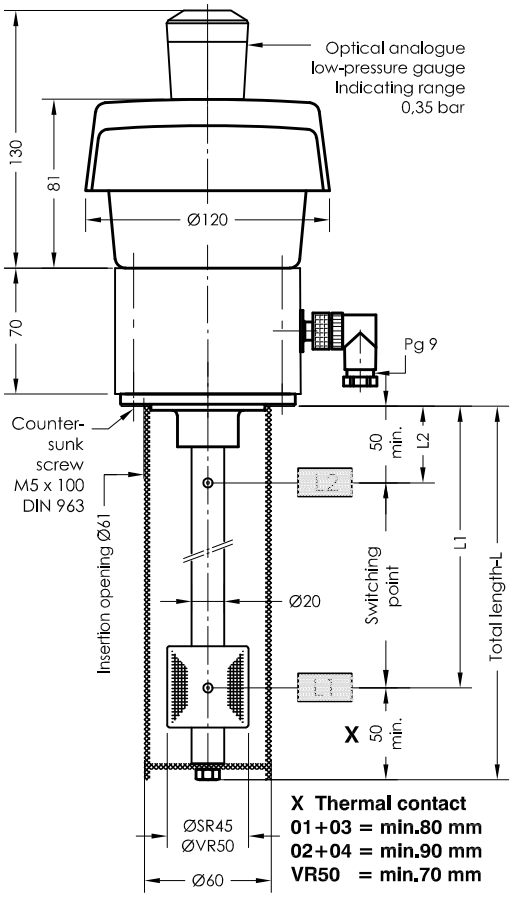

X Thermal contact
01+03 = min.80 mm
02+04 = min.90 mm
VR50 = min.70 mm

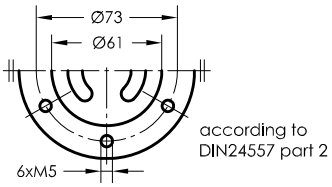

The filter elements must be cleaned at regular intervals!

Level contact

Level contact -04-

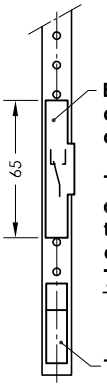

Bistable changeover-contact cartridges.

The minimum distance between two fixed contact cartridges is 70mm.

Thermal element

Level contact -03-

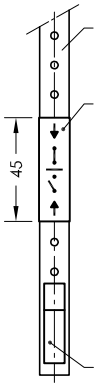

Strip with perforations 10mm

Bistable plain-contact cartridges. The minimum distance between two contact cartridges is 50mm. The make or break function is freely adjustable by 180°-rotation of the contact cartridge.

Thermal element

Order code

Specimen order

NR-BL-S-OU-SR45-L370-03-L1/300/S-T70Ö-MS-M12-24V

O=without protective tube
S=Protective tube

Float type
SR45
VR50

Total length-L switching tube (mm)
standard length
L= 280 L= 800
L= 370 L= 1000
L= 500 L= 1200

Level contact type
01 = fixed, plain
02 = fixed, changeover
03 = adjustable, plain
04 = adjustable, changeover

Switching point L1-L3/ mm from sealing edge
Ö = break
S = make
W= changeover
Function with increasing level

Pt100
Thermal contact
T10Ö
T40Ö
T50Ö
T60Ö (S)
T70Ö (S)
T80Ö (S)
T90Ö
(Ö preferred)

Operating voltage
VDC 10-36 = 24V
VAC 10-230 = 230V

Plug socket connector
M12
3+PE
DIN 43651

Execution
MS - Brass
VA - Switching tube Stainless steel

Plug socket connector

3+PE
EN 175301-803
(DIN 43650)
IP 65

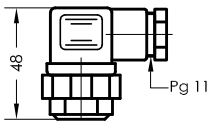

DIN 43651
(EN 175201-804)
6+PE - IP 65

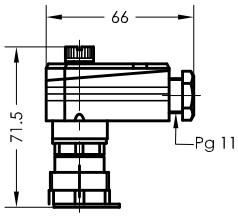

Serie M12 - 24V max.
IP 67

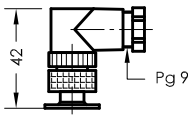

Technical data

Description

The level - temperature regulator type NR - BL -OU is a solenoid switch operating without contact with the function of monitoring and regulating liquid levels , temperatures and tank pressuring.
The switching tube contains bistable protective gas contacts.
They may be fixed or alternatively mounted as an adjustable contact cartridge on a perforated strip. For fixed contacts, the contact intervals and their functions must be given. Plain contact cartridges can be subsequently adjusted for height. The function of make or break can then be altered by turning the cartridge through 180° degrees.
The permanent magnet built into the float switches the contacts when the level changes. The switching difference (hysteresis) is 4 mm.
For temperature monitoring and regulation, thermal elements such as Pt100 and thermal contacts can be additionally incorporated.
The level controller is maintenance - free when nondeposit media are used.
For inductive loads, a protective circuit must be provided (free-wheeling diode/RC element).
The device must only be installed by specialists.

Max. viscosity SR45 ISO VG 100 / VR50 ISO VG 320

Technical data

Protective tube	Stainless steel
Switching tube	Brass or stainless steel max.L = 2000mm
Connection flange	Hydac - Filter connection to DIN 24557 / T2
Temperature of medium	100°C max.
Float	Hard-PU SR45, stainless steel VR50
Level contacts	bistable make/break/changeover optional fixed or adjustable
Switching potential	Contact type 01+03: 0,5A - 10W - 230V AC / DC Contact type 02+04: 1A - 60W - 250V AC / DC
Filter element	3 µm
Air flow rate	Δp 0,01 bar at 1500 l/min
Oil sampling connection	over aeration filter
Thermal elements	Pt100, thermal contact
Number of functions	max. 3 can be incorporated
Mounting position	vertical ± 30°
*Thermal contact	Sheet TR-GB-507

GOLDAMMER
REGELUNGSTECHNIK GMBH
SCHÖLLERSHEIDER STR. 15
P.O.BOX 10 02 17
D-40802 METTMANN
PHONE (49) 2104/12093
FAX (49) 2104/12028
www.Goldammer-Regelungstechnik.com

NR - BL - TMA - OU

Level - temperature controller with ventilation filter and low-pressure gauge

Adjustable contact cartridge
Thermoelement
Temperature output 4-20 mA

serial No.	Date
BL-GB- 800a	05/15

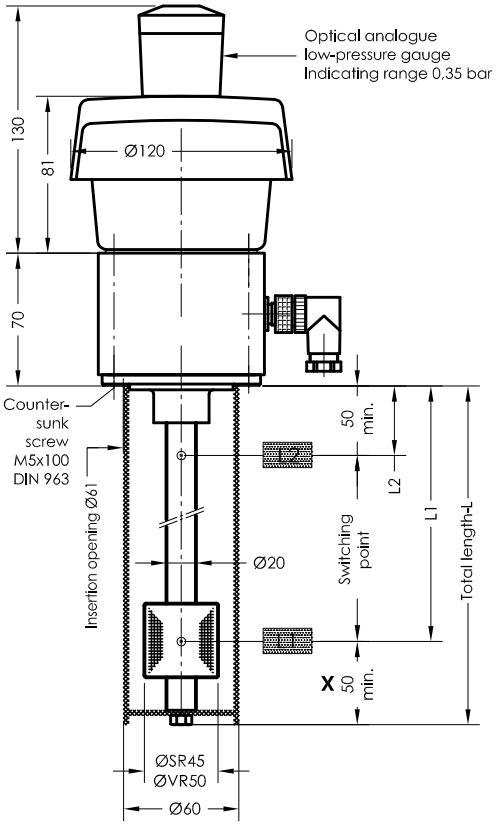

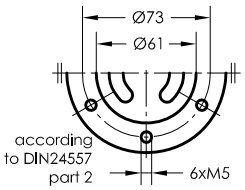

The filter elements must be cleaned at regular intervals!

Pin Assignment

Pin assignment

1 = +24V DC
2 = Temperatur
3 = gemeinsam L1/L2/T
4 = L1
5 = L2
6 = T

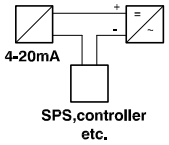

Level contact
-03-

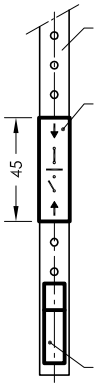

Strip with perforations 10mm

Bistable plain-contact cartridges. The minimum distance between two contact cartridges is **50mm.** The make or break function is freely adjustable by 180°-rotation of the contact cartridge.

Thermal element

Order code

Specimen order

NR-BL-TMA-OU-SR45-L370-03-L1/300/S-T70Ö-MS-M12-24V

TMA=without protective tube
TMAS=Protective tube

Float type
SR45
VR50

Total length-L
switching tube (mm)
standard length
L= 280 L= 800
L= 370 L= 1000
L= 500 L= 1200

Level contact type
03 = adjustable, plain

Switching point L1-L2/
mm from sealing edge
Ö = break
S = make
Function with
increasing level

Pt100
Thermal contact
T10Ö
T40Ö
T50Ö
T60Ö (S)
T70Ö (S)
T80Ö (S)
T90Ö
(Ö preferred)
(Indicate T1... - T2...
for two thermal contacts)

Plug socket
connector
DIN 43651
M12

Execution
MS - Brass
VA - Flange, Switching tube and float stainless steel

Operating voltage
VDC 10-36 = 24V

Plug socket connector

DIN 43651
(EN 175201-804)
6+PE - IP 65

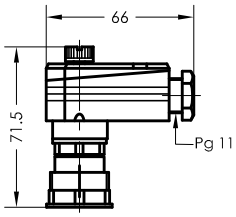

Serie M12
24V max.
IP 67

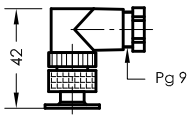

Technical data

Description

The type NR - BL -TMA - OU level controller with a ventilation filter is a contactless - operating magnetic switch and is used to monitor and control liquid levels, temperatures and tank ventilation, optional available with under-pressure indicator.
Bistable protective gas contacts are installed in the switch tube as contact cartridges adjustable on a perforated strip. The contact cartridges can be retrospectively adjusted in height in increments of 10 mm. The break or make function can be changed by rotating the cartridge 180° .
The permanent magnet fitted in the float switches the contacts if the level changes. The switching difference (hysterese) is 4 mm. Thermal elements such as Pt 100 and thermocontacts can additional be fitted for temperature monitoring and control.
With the TMA version, the temperature signals from the Pt100 fitted in the switch tube is converted to 4-20 mA by a built-in transducer.
The level controller is maintenance free in the absence of media that cause encrustation.

A protective circuit is to be provided for inductive consumers (free-wheeling diode/RC element).
The device must only be installed by specialists.

Max. viscosity SR45 ISO VG 100 / VR50 ISO VG 320

Technical data

Protective tube	Stainless steel
Switch tube	Brass or stainless steel
Mounting flange	Hydac-Filter housing to DIN 24557 / T2
Temperature of medium	100°C max.
Float	Rigid PU SR45 or stainless steel VR50
Level contacts	bistable make/break contacts max. 2 adjustable
Operating voltage	12V ... 30V DC
Switching capacity	0,5A - 10W
Filter element	3 μm
Air throughput	Δp 0,.01 bar at 1500 l/min
Thermoelements	Pt100, Thermal contact
Measuring range	4-20 mA / 0-100°C
Load	RB = $\frac{\text{U-12V}}{\text{20mA}}$
Installed position	Vertical ± 30°
*Thermocontact	Sheet TR-D-507

Other temperature ranges on request

GOLDAMMER
REGELUNGSTECHNIK GMBH
SCHÖLLERSHEIDER STR. 15 PHONE (49) 2104/12093
P.O.BOX 10 02 17 FAX (49) 2104/12028
D-40802 METTMANN www.Goldammer-Regelungstechnik.com

NR - BL - TMA - TA

Level - temperature controller with a ventilation filter and temperature display

Adjustable contact cartridge
Temperature output 4-20 mA
Temperature display

serial No. Date
BL-GB- 800b 06/15

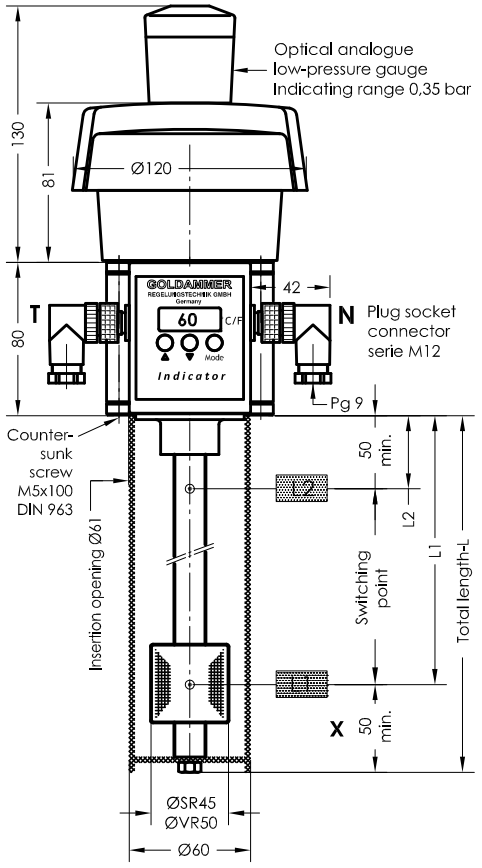

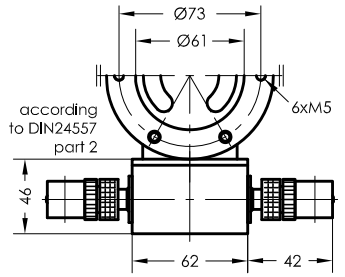

The filter elements must be cleaned at regular intervals!

Pin Assignment

Plug securing

N: 1 = +12-30V DC
2 = L1
3 = GND
4 = L2
5 = L3

T: 1 = +12-30V DC
2 = Temperature

Level contact
-03-

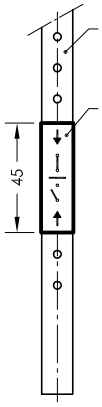

Strip with perforations 10mm

Bistable plain-contact cartridges. The minimum distance between two contact cartridges is 50mm. The make or break function is freely adjustable by 180°-rotation of the contact cartridge.

Thermal element

Order code

Specimen order

NR-BL-TMA-TA-SR45-L370-03-L1/300/S-L2/250/S-MS-OU-24V

TMA=without protective tube
TMAS=Protective tube

Float type
SR45
VR50

Total length-L
switching tube (mm)
standard length
L= 280 L= 800
L= 370 L= 1000
L= 500 L= 1200

Level contact type
03 = adjustable, plain

Switching point L1-L3/
mm from sealing edge
Ö = break
S = make
Function with
increasing level

Execution
MS - Brass
VA - Flange, Switching tube and float stainless steel

O - without under-pressure indicator
OU - optional with under-pressureindicator

Operating voltage
VDC 10-36 = 24V

Technical data

Description

The type NR - BL - TMA - TA level controller with a ventilation filter is a contactless - operating magnetic switch and is used to monitor and control liquid levels, temperatures and tank ventilation, optional available with under-pressure indicator.
Bistable protective gas contacts are installed in the switch tube as contact cartridges adjustable on a perforated strip. The contact cartridges can be retrospectively adjusted in height in increments of 10 mm. The break or make function can be changed by rotating the cartridge 180° .
The permanent magnet fitted in the float switches the contacts if the level changes. The switching difference (hysterese) is 4 mm.
For temperature monitoring, the temperature dependent signal emitted from a Pt100 resistor mounted in the contact tube is converted with the installed transducer into a temperature linear current change of 4-20mA.
The level controller is maintenance free in the absence of media that cause encrustation.
A protective circuit is to be provided for inductive consumers (free-wheeling diode/RC element).
The temperature indication is by means of an electronic circuit with an LED display that indicates the actual temperature, optionally in °C or °F.
The device must only be installed by specialists.

Max. viscosity SR45 ISO VG 100 / VR50 ISO VG 320

Technical data

Protective tube	Stainless steel
Switch tube	Brass or stainless steel
Mounting flange	Hydac-Filter housing to DIN 24557 / T2
Temperature of medium	100°C max.
Float	Rigid PU SR45 or stainless steel VR50
Connection	M12 IP67 series - 24V max.
Level contacts	bistable make/break contacts max. 2 adjustable
Operating voltage	12V ... 30V DC
Switching capacity	0,5A - 10W
Filter element	3 µm
Air throughput	Δp 0,.01 bar at 1500 l/min
Thermoelements	Pt100, Thermal contact
Measuring range	4-20 mA / 0-100°C
Load	RB = U-12V / 20mA
Display	LED 3-digit -10 - 100°C (°F)
Installed position	Vertical ± 30°
*Thermocontact	Sheet TR-D-507

Other temperature ranges on request

GOLDAMMER
REGELUNGSTECHNIK GMBH
SCHÖLLERSHEIDER STR. 15 PHONE (49) 2104/12093
P.O.BOX 10 02 17 FAX (49) 2104/12028
D-40802 METTMANN www.Goldammer-Regelungstechnik.com

NR - BL - TA

Level-temperature controller with a ventilation filter, 2 adjustable contact cartridges and 3 PNP temperature switching outputs with temperature display

serial No.	Date
BL-GB- 801	06/15

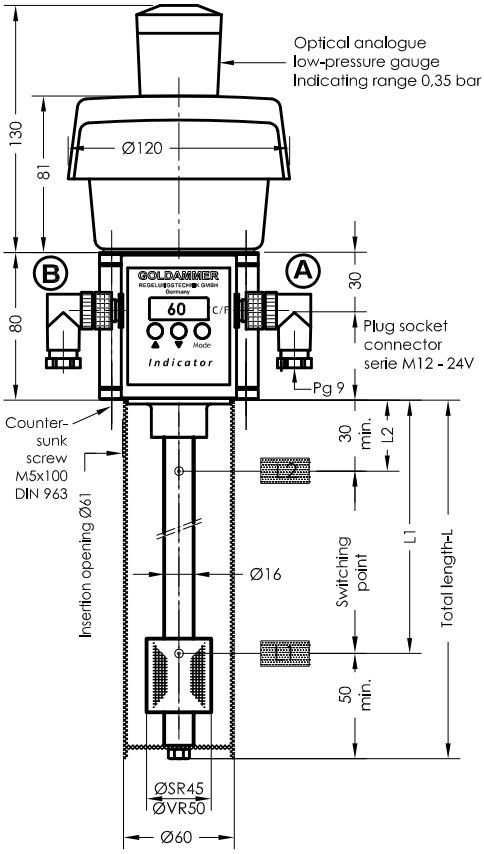

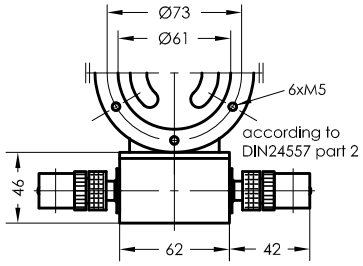

The filter elements must be cleaned at regular intervals!

Pin Assignment

Pin assignment

A: 1 = common L1/L2
2 = level L1
4 = level L2

B: 1 = 12V - 30V DC
4 = temperature 1
2 = temperature 2
5 = temperature 3 } **+UB**
3 = GND

Level contact
-03-

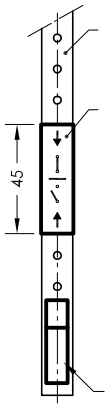

Strip with perforations 10mm

Bistable plain-contact cartridges. The minimum distance between two contact cartridges is 50mm. The make or break function is freely adjustable by 180°-rotation of the contact cartridge.

Thermal element

Order code

Specimen order

NR-BL-TA-SR45-L370-03-L1/300/S-L2/250/S-OU-24V

BL=without protective tube
BLS=Protective tube

Float type
SR45
VR50

Total length-L
switching tube (mm)
standard length
L= 280 L= 800
L= 370 L= 1000
L= 500 L= 1200

Level contact type
03 = adjustable, plain

Switching point L1-L3/
mm from sealing edge
Ö = break
S = make
Function with
increasing level

O - without under-pressure indicator
OU - optional with under-pressureindicator

Operating voltage
VDC 10-36 = 24V

Technical data

Description

The type NR - BL - TA level-temperature controller with a ventilation filter is a contactless - operating magnetic switch and is used to monitor and control liquid levels, temperatures and tank ventilation with filling shut off.
Bistable protective gas contacts are installed in the switch tube as contact cartridges adjustable on a perforated strip. This can be retrospectively adjusted in height. The break or make function can be changed by rotating the cartridge 180°.
The permanent magnet fitted in the float switches the contacts if the level changes. The switching difference (hysterese) is 4 mm. The temperature monitoring and control is by means of an electronic circuit with LED display that indicates the actual values, optionally in °C or °F.
The three temperature switching points are adjusted by means of three buttons fitted on the control unit.

The level controller is maintenance free in the absence of media that cause encrustation.
A protective circuit is to be provided for inductive consumers (free-wheeling diode/RC element).

The device must only be installed by specialists.

Max. viscosity SR45 ISO VG 100 / VR50 ISO VG 320

Technical data

Protective tube	Stainless steel
Switch tube	Brass
Mounting flange	Filter housing to DIN 24557 / T2
Nominal pressure	1 bar max.
Temperature of medium	100°C max.
Float	Hard-PU SR45 stainless steel VR50
Level contacts	Bistable make/break contacts
Connection	M12 IP67 series
Operating voltage	12V ... 30V DC
Switching capacity	20 W/VA max. 30 V/DC max.
Filter element	3 µm
Air throughput	Δp 0,01 bar at 1500 l/min
Thermoelements	Pt100
Display	Three-digit LED
Temperature range	-50 - 200°C (°F)
Temperature switching points	max. 3 adjustable
Hysterese	1K works setting
Switching current	0,5A max.
Installed position	Vertical ± 30°

GOLDAMMER
REGELUNGSTECHNIK GMBH
SCHÖLLERSHEIDER STR. 15 PHONE (49) 2104/12093
P.O.BOX 10 02 17 FAX (49) 2104/12028
D-40802 METTMANN www.Goldammer-Regelungstechnik.com

NR - BL - MA - OU

Level - temperature regulator with aeration filter with and low-pressure gauge, output 4-20 mA

serial No. Date
BL-GB- 802a 12/18

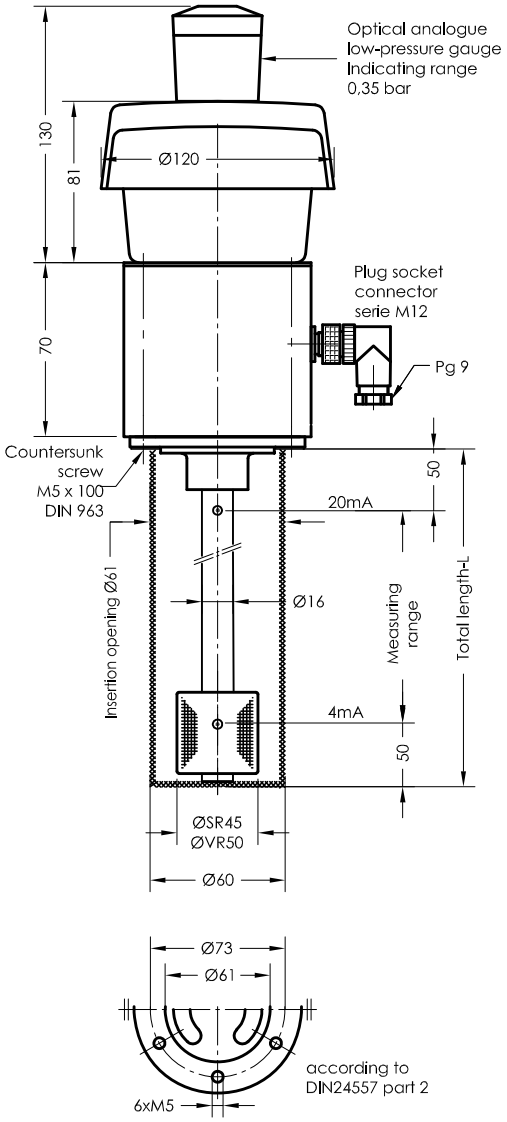

The filter elements must be cleaned at regular intervals!

Pin Assignment

Plug securing
power supply

3-polig + PE
EN 175301-803 (DIN 43650)

level	1 = +12-30V DC
	2 = level

M12 - 5 polig

level	1 = +12-30V DC
	4 = level

3-polig + PE
EN 175301-803 (DIN 43650)

level	1 = +12-30V DC
+ temperature	2 = level
	3 = temperature

M12 - 5-polig

level	1 = +12-30V DC
+ temperature	4 = level
	2 = temperature
seperate	1 = +12-30V DC
level	4 = level
+ temperature	2 = +12-30V DC
	3 = temperature

Order code

Specimen order

NR BL-S-MA-OU-SR45-L370-T-O-MS-M12

O =without protective tube
S=Protective tube

Float type
SR45
VR50

Total length-L
switching tube (mm)
standard length
L= 280 L= 800
L= 370 L= 1000
L= 500 L= 1200

T = temperature
0 = without temperature

0 = combined
1 = separate

Plug socket connector
3+PE
M12

Execution
MS - Brass
VA - Protective tube
Switching tube
and float
stainless steel

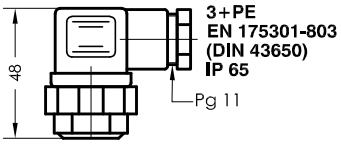

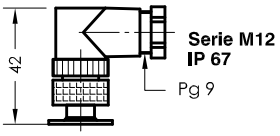

Technical data

Description

The type NR - BL - MA - OU level - temperature controller with a ventilation filter is a contactless-operating magnetic switch and is used for continuous remote transmission of liquid levels and temperatures and for tank ventilation. Small amount of oil can be filled through the ventilation filter.
The level and temperature can be evaluated over lines of any length for automatic control and display. The level controller contains a resistance measuring chain and a Pt100 resistor.
The level and temperature signals are converted to a linear current change of 4-20 mA in a built-in measuring transducer.
The electrical connection to the power supply and to one or more controllers, SPCs or measuring instruments requires a screened line in all areas of the electronics for interference-free transmission of the data signal.

The level controller is maintenance-free when nondeposit media are used.
The device must only be installed by specialists.

Max. viscosity SR45 ISO VG 100 / VR50 ISO VG 320

Technical data

Protective tube	Stainless steel
Switch tube	Brass or stainless steel
Mounting flange	Filter housing according to DIN 24557 / T2
Nominal pressure	1 bar max.
Temperature of medium	100°C max.
Float	Rigid PU SR 40 / SR45 / VR50
Connection	M12 IP67 series
Operating voltage	12V ... 30V DC max
Measuring range	4-20 mA / 0-100°C / 0-100%
Thermoelement	Pt100
Contact grid	7.5 mm
Load	RB = U-12V / 20mA
Filter element	3 µm
Air throughput	Δp 0,01 bar at 1500 l/min
Installed position	Vertical ± 30°

Other temperature ranges on request

GOLDAMMER
REGELUNGSTECHNIK GMBH
SCHÖLLERSHEIDER STR. 15 PHONE (49) 2104/12093
P.O.BOX 10 02 17 FAX (49) 2104/12028
D-40802 METTMANN www.Goldammer-Regelungstechnik.com

NR - BL - MA - TA

Level - temperature controller with a ventilation filter, output 4-20 mA and 3 PNP temperature switching outputs with a temperature display

serial No.	Date
BL-GB- 803	06/15

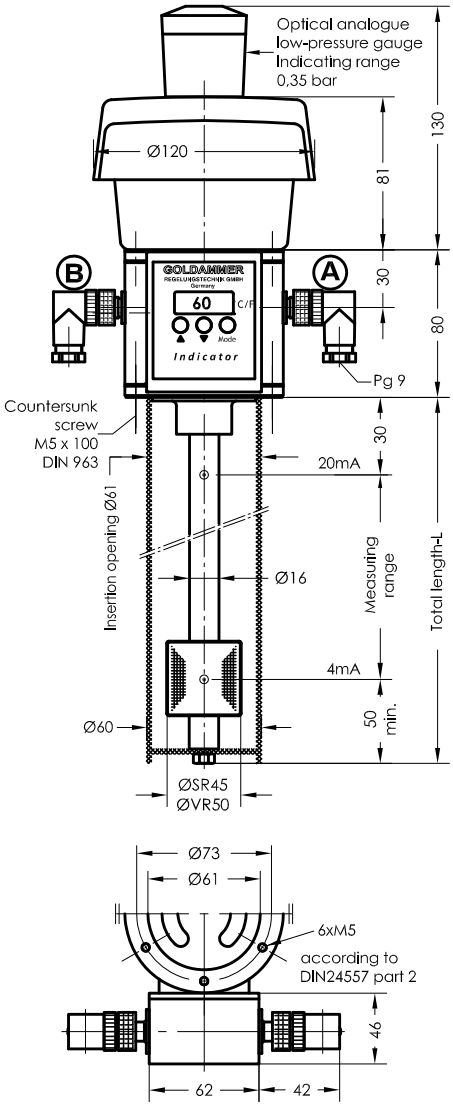

The filter elements must be cleaned at regular intervals!

Pin Assignment

Pin assignment

A: 1 = level 4-20mA
2 = level 12V - 30V DC

B: 1 = 12V - 30V DC
4 = temperature 1
2 = temperature 2
5 = temperature 3
} +UB
3 = GND

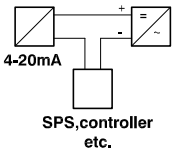

Order code

Specimen order

NR - BL - S - MA - TA - SR45 - L370 - T - O - MS - OU

O =without protective tube
S=Protective tube

Float type
SR45
VR50

Total length-L
switching tube (mm)
standard length
L= 280 L= 800
L= 370 L= 1000
L= 500 L= 1200

T = temperature
0 = without temperature

0 = combined
1 = separate

Execution
MS - Brass
VA - Flange, Protective tube, Switching tube and float stainless steel

O - without under-pressure indicator
OU -optional with under-pressure indicator

Technical data

Description

The type NR - BL - MA - TA with a ventilation filter is a contactless-operating magnetic switch and is used for continuous remote transmission of liquid levels and temperatures and for tank ventilation with a filling-shutoff.
The level can be evaluated over lines of any length for automatic control and display. The level controller contains a resistance measuring chain and a Pt100 resistor.
The level and temperature signals are converted to a linear current change of 4-20 mA in a built-in measuring transducer.
The electrical connection to the power supply and to one or more controllers, SPCs or measuring instruments requires a screened line in all areas of the electronics for interference-free transmission of the data signal.
Temperature monitoring and control is by means of an electronic circuit with an LED display that indicates the actual temperature, optionally in °C or °F.
The three temperature switching points are adjusted by means of three buttons fitted on the control unit.
The level controller is maintenance free provided there are no media that cause encrustation.

The unit may be fitted only by technical personnel.

Max. viscosity SR45 ISO VG 100 / VR50 ISO VG 320

Technical data

Protective tube	Stainless steel
Switch tube	Brass or stainless steel
Mounting flange	Filter housing according to DIN 24557 / T2
Nominal pressure	1 bar max.
Temperature of medium	100°C max.
Float	Hard-PU SR45 or stainless steel VR50
Connection	M12 IP67 series
Operating voltage	12V ... 30V DC max
Measuring range	4-20 mA
Thermoelement	Pt100
Contact grid	7.5 mm
Load	RB = U-12V / 20mA
Filter element	3 µm
Air throughput	Δp 0,01 bar at 1500 l/min
Display	Three-digit LED
Temperature range	-50 - 200°C (°F)
Temperature switching point	max. 3 adjustable
Hysterese	1K works setting,
Switching current	max. 1A
Installed position	Vertical ± 30°

GOLDAMMER
REGELUNGSTECHNIK GMBH
SCHÖLLERSHEIDER STR. 15 PHONE (49) 2104/12093
P.O.BOX 10 02 17 FAX (49) 2104/12028
D-40802 METTMANN www.Goldammer-Regelungstechnik.com

NR - BL - 4-20MA - TA - OU

Level - temperature controller with a ventilation filter, low-pressure gauge and resistance thermometer - output 4-20 mA

serial No.	Date
BL-GB- 803b	06/15

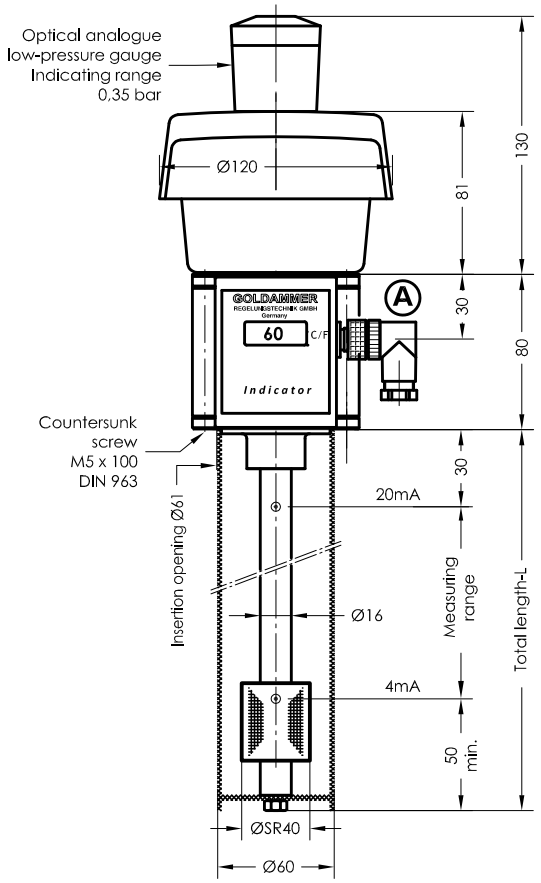

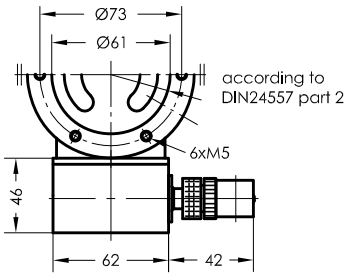

Clean filter elements regularly !

Pin Assignment

Pin assignment

A: 1 = 12V - 30V DC
4 = level 4-20mA
2 = temperature 4-20mA

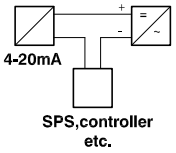

Order code

Specimen order

NR - BL - 4-20mA - TA - OU - L500 - MS

BL=without protective tube
BLS=Protective tube

Total length-L
switching tube (mm)
standard length
L= 280 L= 800
L= 370 L= 1000
L= 500 L= 1200

Execution
MS - Brass
VA - Flange, Switching tube and float stainless steel

Technical data

Description

The type NR - BL - 4-20MA -TA - OU level - temperature controller with a ventilation filter is a contactless-operating magnetic switch and is used for continuous remote transmission of liquid levels and temperatures and for tank ventilation with a filling-shutoff.
The level and temperature can be evaluated over lines of any length for automatic control and display. The level controller contains a resistance measuring chain and a Pt100 resistor.
The level and temperature signals are converted to a linear current change of 4-20 mA in a built-in measuring transducer.
The temperature indication is by means of an electronic circuit with an LED display that indicates the actual temperature, optionally in °C or °F.

The level controller is maintenance free provided there are no media that cause encrustation.

The unit may be fitted only by technical personnel.

Max. viscosity SR40 ISO VG 100

Technical data

Protective tube	Stainless steel
Switch tube	Brass
Mounting flange	Filter housing according to DIN 24557 / T2
Temperature of medium	100°C max.
Float	Rigid PU SR40
Connection	M12 IP67 series
Operating voltage	12V ... 30V DC max
Measuring range	4-20 mA / 0-100°C / 0-100%
Thermoelement	Pt100
Display	LED 3-digit
Contact grid	7.5 mm
Load	RB = U-12V / 20mA
Filter element	3 µm
Air throughput	Δp 0,01 bar at 1500 l/min
Display	Three-digit LED, -50 - 200°C (°F)
Installed position	Vertical ± 30°

Other temperature ranges on request

GOLDAMMER
REGELUNGSTECHNIK GMBH
SCHÖLLERSHEIDER STR. 15 PHONE (49) 2104/12093
P.O.BOX 10 02 17 FAX (49) 2104/12028
D-40802 METTMANN www.Goldammer-Regelungstechnik.com

NR - EBF - 3 - ...

Level - filling - venting filter

OPEL

Model specified by OPEL
LVH 1/1

serial No.	Date
BL-GB- 805	06/15

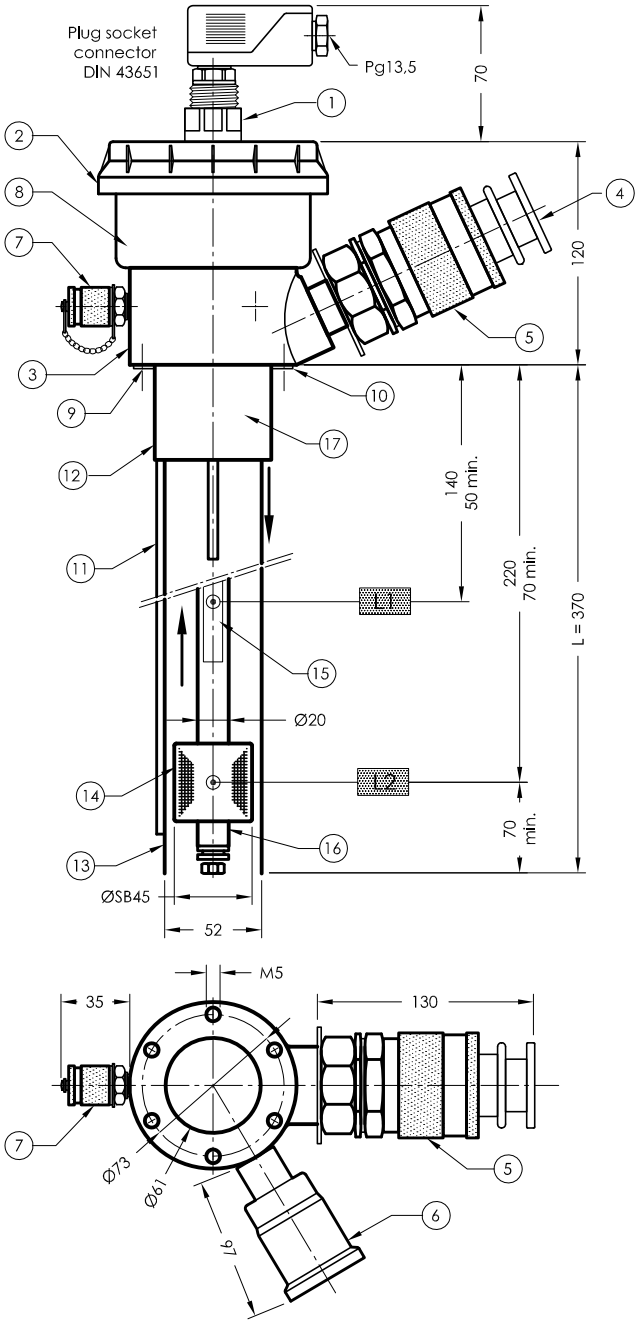

1. Plug socket connector DIN 43651 with three LED
2. Venting filter PI 0125 ERS 05 02 5
3. Intermediate flange Ø 85
4. Dust cover
5. Filling quick acting coupling MD - 019 G¾"
6. Low - pressure indicator / M10 x 1
7. Miniature measuring device 1620 / M10 x 1
8. Filling lock
9. 6x countersunk screws DIN 963 M5 x 70
10. Seal
11. Sampling tube
12. Protective tube
13. Intermediate tube
14. Float SR 45
15. Contact cartridge changeover 04
16. Contact tube
17. Circuit diagram

Pin Assignment

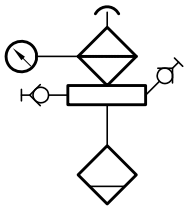

NR - EBF - 3
Micron

Terminal diagram

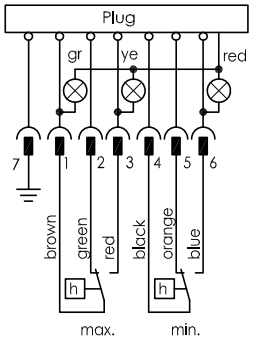

Function tank full

Order code

Specimen order

NR-EBF-3-SR45-L370-04-L1/140/W-L2/220/W

The switching points L1 and L2 are adjusted by factory for tanks specified in DIN 24339.
It is possible to adjust them by hand.

Technical data

Description

The level regulator type NR - EBF with filling and venting filter is a contact less magnetic switch which serves for monitoring and control of liquids and tank venting.

Located in the contact tube are bistable inert gas contacts in a cartridge contact, mounted adjustable on a perforated strip. The contact cartridges can be adjusted for height.

The permanent magnet built into the float switches the contacts when the level changes. The switching difference (hysteresis) is 4 mm. An optical low - pressure indicator is provided for monitoring the filter element for clogging.

Filling can only take place via ¾" filling quick - acting coupling (filter station). Oil sampling can take place via the measuring coupling.

The device must only be installed by specialists.

Technical data

Switching tube	Brass
Connection flange	Filter connection
Temperature of medium	according to DIN 24557 / T2
Float	100°C max.
Level contacts	Hard-PU SR45
Plug socket connector	bistable, changeover
Operating voltage	DIN 43651 IP65, with 3 LED
Filter element	10 - 30 V
Oil sampling connection	852 519 Sm - L Miniature measuring device 1620 / M10 x 1
Seal	1 x cork 1 x buna N
Mounting position	vertical ± 30°

GOLDAMMER
REGELUNGSTECHNIK GMBH

SCHÖLLERSHEIDER STR. 15 PHONE (49) 2104/12093
P.O.BOX 10 02 17 FAX (49) 2104/12028
D-40802 METTMANN www.Goldammer-Regelungstechnik.com

NR - BL - K ...

Level - temperature control unit

serial No.	Date
BL-GB- 806	06/15

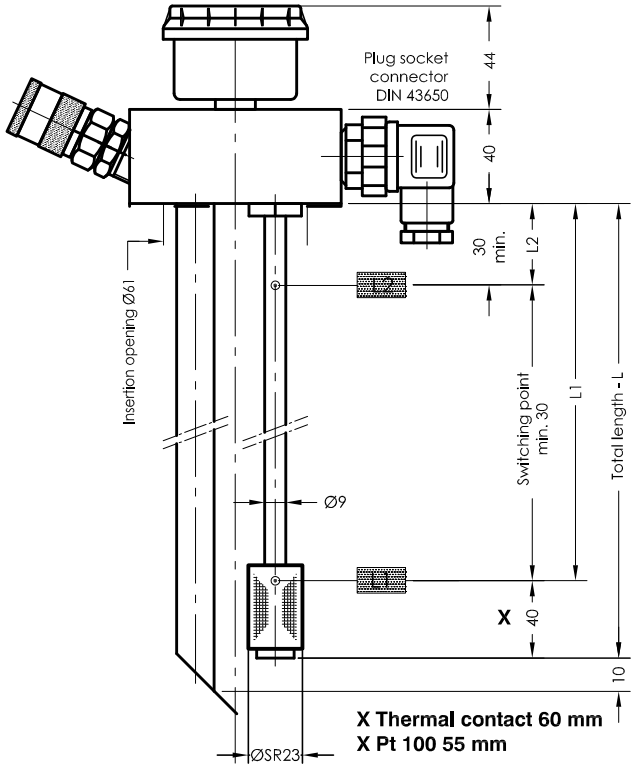

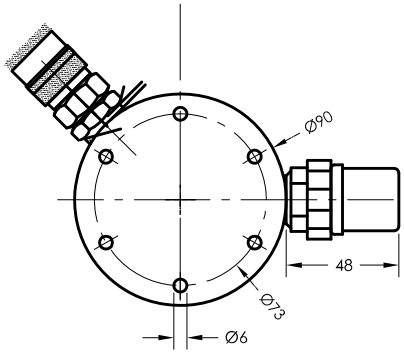

according to DIN24557 part 2

Pin assignment

Pin assignment
M12-LED

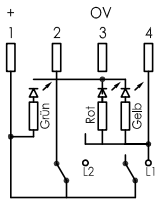

Order code

Specimen order

NR-K-1-SR23-L160-01-L1/120/S-L2/90/Ö-T70Ö-M12

Filling coupling
1 Stäubli G1/2"
2 Walther G1/2"

Total length-L switching tube (mm)

Level contact type
01 = fixed, plain

Switching point L1-L5/ mm from sealing edge
Ö = break
S = make
Function with increasing level

Pt100
Thermal contact
T10Ö
T40Ö
T50Ö
T60Ö (S)
T70Ö (S) **(Ö preferred)**
T80Ö (S)
T90Ö

Plug socket connector
3+PE
DIN 43651
M12
M12-LED

Plug socket connector

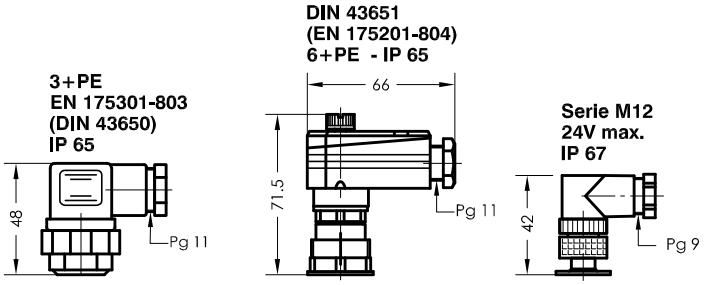

Technical data

Description

The level - temperatur control unit type NR-BL-K... with filling and aeration filter is a solenoid switch operating without contact with the function of monitoring and regulating liquid levels , temperatures and tank pressuring.
The switching tube contains fixed mounted bistable protective gas contacts. For fixed contacts, the contact intervals and their functions must be given. The permanent magnet built into the float switches the contacts when the level changes. The switching difference (hysteresis) is 4 mm. For temperature monitoring and regulation, thermal elements such as thermal contacts can be additionally incorporated.
The level controller is maintenance - free when nondeposit media are used.
The filling can occur with the 1/2" filling-quick coupling (filter station) only . The aeration occurs with a corrosion resistant housing.

For inductive loads, a protective circuit must be provided (free-wheeling diode/RC element).
The device must only be installed by specialists.

Max. viscosity ISO VG 100

Technical data

Switching tube	Brass, max.L = 800mm
Connection flange	Polyamide with flat seal
Nominal pressure	Pressureless
Temperature of medium	100°C max.
Float	Hard-PU SR23
Level contacts	bistable make/break
Plug socket connector	DIN 43650 or DIN 43651 or serie M12 IP67
Switching current	0,5A max.
Switching potential	10 W/VA max. 230V AC max.
Thermal elements	Pt100, sensor, thermal contact
Thermal contact	Hysteresis 1K Calibration ± 3°C
Number of functions	max. 3 can be incorporated
Breather filter	3 microns
Mounting position	vertical ± 30°
*Thermal contact	Sheet TR-GB-507

GOLDAMMER
REGELUNGSTECHNIK GMBH
SCHÖLLERSHEIDER STR. 15 PHONE (49) 2104/12093
P.O.BOX 10 02 17 FAX (49) 2104/12028
D-40802 METTMANN www.Goldammer-Regelungstechnik.com

EExi DIN 60079-11

serie EExi

- EExi level regulator tank insert
- EExi level controller surface mounting
- EExi level-temperature regulator tank insert
- EExi level-temperature-capillary tube regulator
- EExi temperature-capillary tube regulator
- EExi Water Indicator
- EExi accessiories
- EExi Instructions

Plug variants series EExi - Atex

serial No. Date
EX - GB - 001 11/17

Plug variants	1 - 4 Level = L	Level = L +Thermal contact = T	Level = L +Pt100
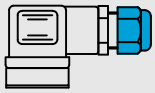 Plug socket connector 3+PE EN 175301-803 (DIN 43650) IP 65	1 Level contact 1 L1 2	1 Level contact +1 Thermal contact 1 L1 2 3 T 4	
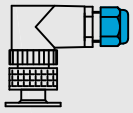 Plug socket connector Serie M12 IP 67	2 Level contacts 1 L1 2 3 L2 4	2 Level contact +1 Thermal contact 1 L1 2 3 L2 4 5 T 6	
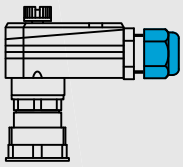 Plug socket connector 6+PE EN 175201-804 (DIN 43651) IP 65	3 Level contacts 1 L1 2 3 L2 4 5 L3 6	2 Level contacts +2 Thermal contact 1 L1 2 3 L2 4 5 T1 6 7 T2 8	1 Level contact +Pt100 sensor 1 L1 2 3 Pt100 4 5
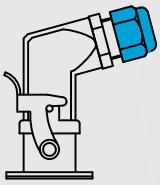 Plug socket connector HAN I IP 65			
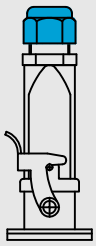 Plug socket connector HAN II IP 65	4 Level contacts 1 L1 2 3 L2 4 5 L3 6 7 L4 8	3 Level contacts +1 Thermal contact 1 L1 2 3 L2 4 5 L3 6 7 T 8	2 Level contacts +Pt100 sensor 1 L1 2 3 L2 4 5 Pt100 6 7

Level 0/4-20mA	Temperature 0/4-20mA
3-wire 1 2 3 Ex-zone / No-Ex-Zone Transmitter	3-wire 1 2 3 Ex-zone / No-Ex-Zone Transmitter

Level Temperature 0/4-20mA

3-wire

Level: 1 2 3

Temperature: 4 5 6

Ex-zone / No-Ex-Zone Transmitter

Resistance thermometer Pt100

Pt100 sensor

1 2 3

Three-wire connection

Pt100 sensor

1 2 3 4

Four-wire connection

Temperature monitor

1 Temperature contact

1 2

1 2

2 Temperature contacts

1 2 3 4

T1 T2

GOLDAMMER
REGELUNGSTECHNIK GMBH
SCHÖLLERSHEIDER STR. 15
P.O.BOX 10 02 17
D-40802 METTMANN
PHONE (49) 2104/12093
FAX (49) 2104/12028
www.Goldammer-Regelungstechnik.com

EExi – Vorschriften DIN 90079-11

EExi – Vorschriften (D)
Das Gerät darf nur von Fachpersonal, das mit der Montage, der Inbetriebnahme und dem Betrieb dieses Produktes vertraut ist, montiert und in Betrieb genommen werden.
Bei Geräten in explosionsgeschützter Ausführung müssen die Personen eine Ausbildung oder Unterweisung bzw. eine Berechtigung zum Arbeiten an Geräten in explosionsgefährdeten Anlagen haben.
Sachgemäßer Transport und fachgerechte Lagerung des Gerätes werden vorausgesetzt.
Bei der elektrischen Installation sind die einschlägigen Vorschriften und Unfallverhütungsvorschriften zu beachten.
Für Montage und Installation in explosionsgefährdeten Bereichen gilt die DIN EN 60079-14 bzw. VDE 0165 Teil 1.
Dieses Gerät ist für den Anschluss an eigensichere Stromkreise nach DIN EN 60079-11 als "einfaches Betriebsmittel" anzusehen und geeignet für Gruppe II Kategorie 2 (Zone 1 und 21), Kategorie 3 (Zone 2 und 22), Temperaturklasse IIC-T6. Bei Temperatur-Kapillarrohrreglern (TR12 und TR15) ist unter schweren Betriebsbedingungen die FM (Fernmontage) einzusetzen und das Gehäuse auf Schwingmetallen zu lagern.
Die angegebene Anschlussbelegung ist unbedingt einzuhalten.
Ein Vertauschen der elektrischen Anschlüsse kann zum Aufheben des Explosionsschutzes führen.
Stand: 09/2017

EExi – Instructions (GB)
The equipment may only be installed and commissioned by qualified specialist personnel familiar with its installation, commissioning and operation.
For equipment in an explosion-proof version, such persons must have a qualification or have been given instruction in and/or have an authorisation for operating equipment in places where there is a danger of explosion.
Adequate transport and appropriate storage of the equipment are required.
During electrical installation, the relevant instructions and accident prevention regulations must be observed.
The regulations DIN EN 60079-14 and/or VDE 0165 shall apply to assembly and installation in places where there is a danger of explosion.
This equipment for connection to intrinsically safe electric circuits according to DIN EN 60079-11, is to be regarded as a "simple item of operating equipment" and suitable for Group II Category 2 (Zones 1 and 21), Category 3 (Zones 2 and 22), temperature class IIC-T6. In the case of capillary tube temperature control devices (TR12 and TR15) RE (remote erection) is to be used under difficult operating conditions and the housing is to be supported on rubber-metal connections.
The terminal assignment indicated must be observed without fail.
Reversal of the electric terminals can lead to cancellation of the explosion protection.
Edition of: 09/2017

Prescriptions EExi (F)
L'appareil ne doit être monté et mis en service que par du personnel spécialisé qui est familiarisé avec le montage, la mise en service et l'exploitation du produit.
Concernant les appareils dans une exécution protégée contre les explosions, les personnes doivent avoir une formation ou une instruction et une autorisation de travailler sur des appareils dans des installations explosives.
On part du principe que le transport et le stockage de l'appareil sont conformes.
Concernant l'installation, il faut respecter les prescriptions correspondantes et les prescriptions de prévention des accidents.
On applique la norme DIN EN 60079-14 et VDE 0165 pour le montage et l'installation dans des zones explosives.
Cet appareil est à considérer comme « moyen d'exploitation simple » destiné au raccordement à des circuits électriques á sûreté intrinsèque Selon DIN EN 60079-11, et convient au groupe II catégorie 2 (zones 1 et 21), catégorie 3 (zones 2 et 22), classe de température IIC-T6. Dans des conditions de service dures et difficiles, il fait recourir au montage FM (montage á distance) des thermostats á tube capillaire (TR12 et TR15), et positionner le boîtier sur des joints métallo caoutchouc. Il faut impérativement respecter l'affectation indiquée des bornes. Une permutation des fils aux bornes électriques peut entraîner la disparition de la protection antidéflagrante.
Situation: 09/2017

EExi – Especificaciones (E)
El aparato sólo se debe montar y poner en servicio por personal especializado que esté familiarizado con el montaje, la puesta en servicio y el servicio de este producto.
En aparatos de ejecución protegida contra explosiones, las personas deben haber recibido una formación o instrucción, o una autorización respectivamente, para realizar trabajos en aparatos situados en instalaciones con peligro de explosión.
Se presupone un transporte apropiado y un almacenamiento adecuado del aparato.
En la instalación eléctrica hay que observar los reglamentos pertinentes y los reglamentos de prevención de accidentes.
Para el montaje y la instalación en recintos con peligro de explosión, son aplicables las normas DIN EN 60079-14 o la VDE 0165.
Este aparato ha de preverse para la conexión a un circuito de corriente de seguridad propia, según DIN EN 60079-11 como "medio de utilización simple" y adecuado para el grupo II, categoría 2 (zona 1 y 21), categoría 3 (zona 2 y 22), categoría de temperatura IIC-T6. En reguladores de tubos capilares de temperatura (TR12 y TR15), en condiciones de funcionamiento difíciles ha de aplicarse el montaje a distancia y la caja deberá alojarse sobre caucho-metal.
Es imprescindible que se cumpla el empleo de conexiones indicado.
El cambio de las conexiones eléctricas puede conducir a la anulación de la protección contra explosiones.
Estado al día: 09/2017

Norme EExi (I)
L'apparecchio deve essere montato e messo in funzione solo da tecnici che abbiano familiarità con il montaggio, la messa in servizio ed il funzionamento di questo prodotto.
Per apparecchi di modello protetto contro le esplosioni, le persone devono aver frequentato un corso di addestramento o di qualifica, oppure devono essere in possesso di un certificato o simile che le autorizzi esplicitamente a lavorare su impianti a rischio di esplosione.
Il trasporto regolare ed il magazzinaggio corretto dell'apparecchio sono condizioni necessarie.
Per l'installazione elettrica è necessario rispettare le norme generali e specifiche in materia e le norme antinfortunistiche.
Per il montaggio e l'installazione in ambienti a rischio di esplosione vanno applicate le norme DIN EN 60079-14 o VDE 0165.
Questo apparecchio è previsto per essere collegato a circuiti elettrici con sicurezza intrinseca a norme DIN EN 60079-11 come "semplice mezzo di esercizio" ed è adatto per il gruppo II categoria 2 (zone 1 e 21), categoria 3 (zone 2 e 22), classe di temperatura IIC-T6. Per regolatori della temperatura a capillare (TR12 e TR15), a difficili condizioni di esercizio va utilizzato il montaggio FM (montaggio a distanza) e la scatola deve essere montata su elementi di metalgomma.
I conduttori di alimentazione devono essere collegati ai relativi morsetti come indicato.
Lo scambio di due conduttori elettrici può portare all'annullamento della protezione antideflagrante.
Aggiornamento: 09/2017

GOLDAMMER REGELUNGSTECHNIK GMBH
Schöllersheider Str. 15 TELEFON 02104/12093
D-40822 METTMANN TELEFAX 02104/12028
POSTFACH 10 02 17 info@goldammer-regelungstechnik.com
D-40802 METTMANN www.goldammer-regelungstechnik.com

Explosionsschutz und Eigensicherheit:
Explosion protection and intrinsic safety:

Nachweis der Eigensicherheit für eigensichere Stromkreise mit nur einem, zugehörigen Betriebsmittel (einfacher Nachweis)
Proof of intrinsic safety for intrinsically safe circuits with only one associated apparatus (easier detection)

Für Niveauregler der Baureihe NR..EExi in Kombination mit Niveaukontakten Typ 01, 02, 03, 04 und Thermokontakten Typ T..Ö, T..S gilt für folgende Bauteile die zu erwartende Lebensdauer:

For level regulator of the production series NR ..EExi in combination with level contacts type 01, 02, 03, 04 and thermal contacts type T..Ö, T..S applies to the following parts the expected life span:

Niveaukontakte Typ 01, 02, 03, 04
Level contacts type 01, 02, 03, 04

Die Lebensdauer der Niveaukontakte beträgt bei maximaler Belastung $10^5 \ldots 10^6$ Schaltspiele. Die mechanische Lebensdauererwartung beträgt mindestens 10^9 Schaltspiele. Beim Schalten von Induktiv-, Kapazitiv- und Lampenlasten kann sich die Lebensdauer infolge Überschreitens der zulässigen Einschaltströme oder Schaltspannungen erheblich reduzieren.
Galvanische Trennung der einzelnen Stromkreise nach EN60079-11 Kapitel 6.3.13

The life span of the level contacts amounts by maximum charging $10^5 \ldots 10^6$ switching charges. The mechanical life span amounts at least 10^9 switching charges. During the switching of inductive load, capacitive load and lamp load the life span can be significantly reduced because of exceeding from the permissible starting current or switching voltage.
Galvanic separation of each circuits according to EN60079 -11 Kapital 6.3.13

Technische Daten Kontakttyp 01/03
Ui: Max. Schaltspannung 230 VAC/VDC
Ii: Max. Schaltstrom 0,5 A
Pi: Max. Schaltleistung 10 W/VA
Ci: Kapazität der geöffneten Kontakte 0,5 pF
Li: vernachlässigbar

Technical Data contact type 01/03
Ui: Max. switching voltage 230 VAC/VDC
Ii: Max switching current 0,5A
Pi: Max. switching capacity 10 W/VA
Ci: Capacitance (open contacts) 0,5pF
Li: negligible

Technische Daten Kontakttyp 02/04
Ui: Max. Schaltspannung 250 VAC/VDC
Ii: Max. Schaltstrom 1 A
Pi: Max. Schaltleistung 60 W/VA
Ci: Kapazität der geöffneten Kontakte 1,0 pF
Li: vernachlässigbar

Technical Data contact type 02/04
Ui: Max. switching voltage 250 VAC/VDC
Ii: Max switching current 1A
Pi: Max. switching capacity 60 W/VA
Ci: Capacitance (open contacts) 1,0 pF
Li: negligible

Technische Daten Thermokontakt T..Ö, T..S
schleichend schaltender Kontakt ohne Hysterese
Schaltleistung:
Ui: 24V
Ii: 4A
Pi: 48W
Ci: 6,5pF bei geöffnetem Kontakt
Li: vernachlässigbar

Technical Data thermal contact T..Ö, T..S
Creep action, no differential
Contact rating:
Ui: 24V
Ii: 4A
Pi: 48W
Ci: 6,5pF for open contact
Li: negligible

Technische Daten Pt100
Ui: 10V
Ii: n.a.
pi: 45 mW
Ci: 0 µF
Li: 0 mH
Eigenerwärmungskoeffizient
E in K/mW in Wasser 0.09

Technical Data Pt100
Ui: 10V
Ii: n.a.
pi: 45 mW
Ci: 0 µF
Li: 0 mH
Self-heating coefficient
E in K/mW in water 0.09

NR 1/2" - 3/4" - M20 - M24 EExi - Atex

Level regulator for tank insert

serial No. Date
EX -GB- 100a 04/19

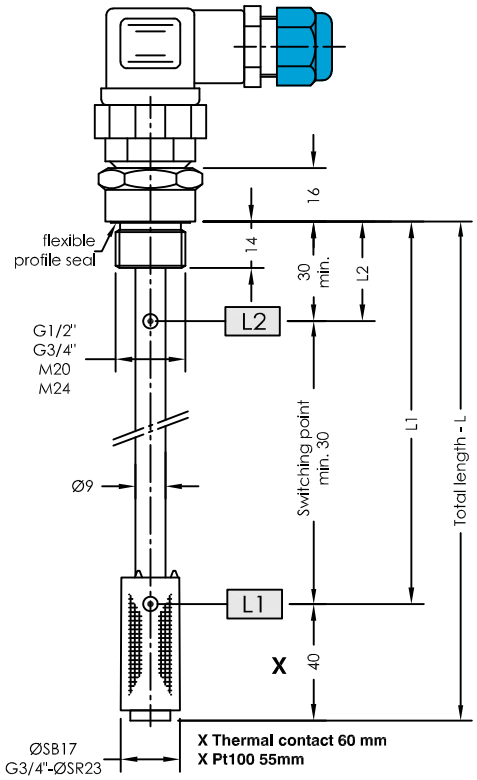

Ex-zone | No-Ex-Zone

Switching amplifier Page EX-GB-900

Isolator Page EX-GB-901

Order code

Specimen order

NR 1/2"-EExi-L250-01-L1/190/S-T70Ö-M12

Tank connection:
1/2"
3/4"
M20
M24

Total length -L of switching tube (mm)
standard length
L = 250
L = 370
L = 500

Level contact type
01 = fixed, plain

Switching point L1-L3/ mm from sealing edge
Ö = break
S = make
Function with increasing level

Plug socket connector
3+PE
M12
DIN 43651

Pt100 Thermal contact
T10Ö
T40Ö
T50Ö
T60Ö (S)
T70Ö (S)
T80Ö (S)
T90Ö
(Ö preferred)

Connector variants

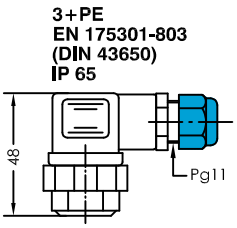

1 function max.

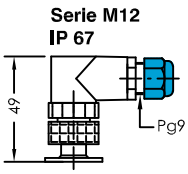

2 functions max.

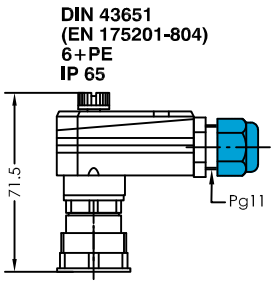

3 functions max.

Technical data

Description

The level regulator type NR 1/2", 3/4", M20, M24 - EExi for tank insert is a solenoid switch, operating without contact with the function of monitoring and regulating liquid levels and temperatures.

The switching tube contains bistable protective gas contacts, fixed in position. For fixed contacts, the contact intervals and their function must be given.

The permanent magnet, built into the float, switches the contacts when the level changes. The switching difference (hysteresis) is 4 mm. For temperature monitoring and regulation, thermal elements such as thermal contacts can be additionally incorporated.

The level regulator is maintenance - free for nondeposit media.

The device has to be installed by specialists only.

Max. viscosity ISO 150mm²/S

Technical data

Switching tube	Brass, max.L = 800mm
Connection	Brass G1/2" SW27 Brass G3/4" SW32 Brass M20 x 1,5 Brass M24 x 1,5
Nominal pressure	1 bar max.
Medium temperature	80°C
Float	Plastic, type SB17 / SR23 - 80°C max. Ceramic, type ELSB17 - 100°C max. (seal: viton)
Level contacts	Make/break contacts
Operating Voltage	For connection to certified intrinsically safe circuits in type of protection EExi only, EN 60079-11
Thermal elements	Pt100, thermal contact
Number of functions	max. 3 can be incorporated
Mounting position	vertical ± 30°

GOLDAMMER
REGELUNGSTECHNIK GMBH
SCHÖLLERSHEIDER STR. 15 PHONE (49) 2104/12093
P.O.BOX 10 02 17 FAX (49) 2104/12028
D-40802 METTMANN www.Goldammer-Regelungstechnik.com

NR 25 ... EExi - Atex

Level regulator for tank insert

serial No. Date
IN-GB- 100 b 11/17

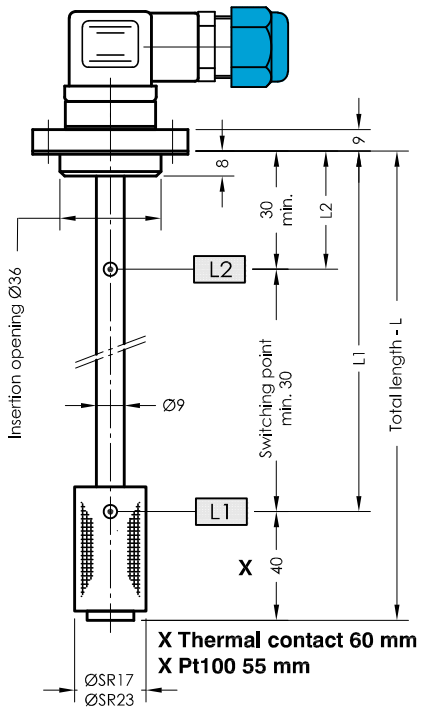

Ex-zone | No-Ex-Zone | Switching amplifier Page EX-GB-900 | Isolator Page EX-GB-901

Specimen order

NR 25 EExi - I - L250-01-L1/190/S-T70Ö-M12

Flange I
Flange II

Total length -L of switching tube (mm)
standard length
L=250
L=370
L=500

Level contact type
01 = fixed-plain
02M SR17 = fixed-changerover

Switching point L1-L3/ mm from sealing edge
Ö = break
S = make
W = Changeover
Function with increasing level

Plug socket connector
3+PE
M12
DIN 43651 - Flange II

Pt100
Thermal contact
T10Ö
T40Ö
T50Ö
T60Ö (S)
T70Ö (S)
T80Ö (S)
T90Ö
(Ö preferred)

Order code

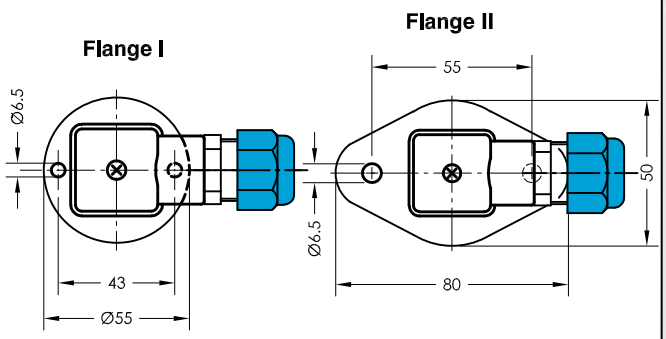

Connector variants

3+PE
EN 175301-803
(DIN 43650)
IP 65

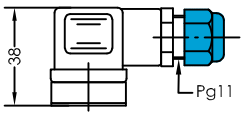

1 function max.

Serie M12
IP 67

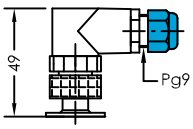

2 functions max.

DIN 43651
(EN 175201-804)
6+PE
IP 65

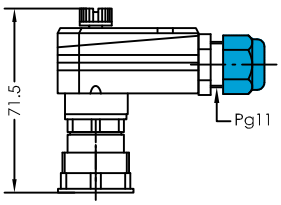

3 functions max.

Technical data

Description

The level regulator type NR 25 ...EExi for tank insert is a solenoid switch operating without contact with the function of monitoring and regulating liquid levels and temperatures.
The switching tube contains bistable protective gas contacts, fixed in position. For fixed contacts, the contact intervals and their function must be given.
The permanent magnet built into the float switches the contacts when the level changes. The switching difference (hysteresis) is 4 mm. For temperature monitoring and regulation, thermal elements such as thermal contacts can be additionally incorporated.
The level regulator is maintenance - free when nondeposit media are used.
For inductive loads, a protective circuit must be provided (free-wheeling diode/RC element).

The device must only be installed by specialists.

Max. viscosity 150mm²/S

Technical data

Switching tube	Brass, max.L = 800mm
Connection flange	Aliminium / Polyamide, with flat seal
Nominal pressure	1 bar max.
Temperature of medium	80°C max.
Float	Plastic, type SR 17 / SR23
Level contacts	Make/break contacts/changerover
Operating Voltage	For connection to certified intrinsically safe circuits in type of protection EExi only, EN 60079-11
Thermal elements	Pt100, thermal contact
Number of functions	max. 3 can be incorporated
Mounting position	vertical ± 30°
*Thermal contact	Sheet TR-GB-507

GOLDAMMER
REGELUNGSTECHNIK GMBH
SCHÖLLERSHEIDER STR. 15
P.O.BOX 10 02 17
D-40802 METTMANN
PHONE (49) 2104/12093
FAX (49) 2104/12028
www.Goldammer-Regelungstechnik.com

NR 1/2" - 3/4" - M20 - M24 EExi - Atex

Level regulator for tank insert

serial No. Date
EX -GB- 100/1 05/19

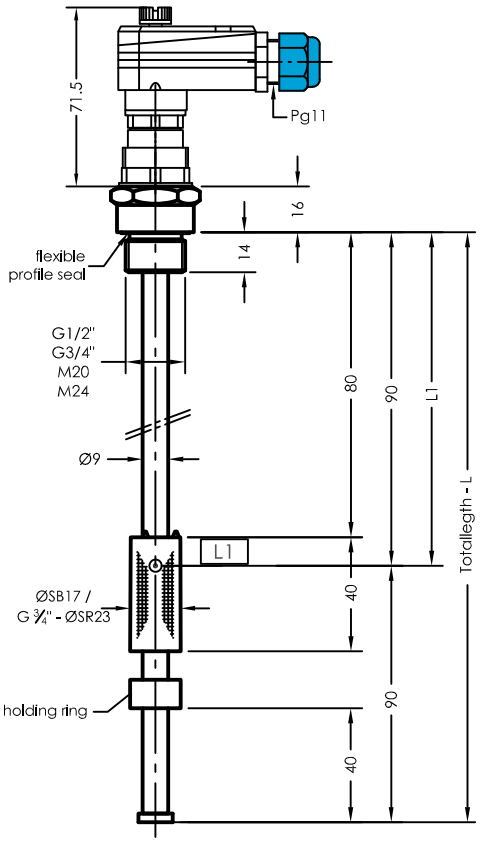

Ex-zone

No-Ex-Zone

Switching amplifier Page EX-GB-900

Isolator Page EX-GB-901

Order code

Specimen order

NR 1/2"-EExi-L280-01-L1/190/S-T1/40/Ö-T2/70/Ö-DIN43651

Tank connection:
1/2"
3/4"
M20
M24

Total length -L
of switching tube (mm)
standard length
L = 250
L = 370
L = 500

Level contact type
01 = fixed, plain

Switching point L1-L3/
mm from sealing edge
Ö = break
S = make
Function with
increasing level

Pt100
Thermal contact
T10Ö
T40Ö
T50Ö
T60Ö (S)
T70Ö (S)
T80Ö (S)
T90Ö
(Ö preferred)
T1..T2.. to be given

Plug socket
connector
DIN 43651

Connector variants

DIN 43651
(EN 175201-804)
6+PE
IP 65

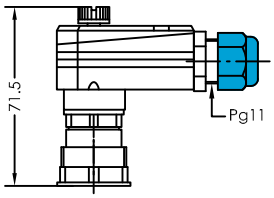

3 functions max.

Technical data

Description

The level regulator type NR 1/2", 3/4", M20, M24 - EExi for tank insert is a solenoid switch, operating without contact with the function of monitoring and regulating liquid levels and temperatures.

The switching tube contains bistable protective gas contacts, fixed in position. For fixed contacts, the contact intervals and their function must be given.

The permanent magnet, built into the float, switches the contacts when the level changes. The switching difference (hysteresis) is 4 mm. For temperature monitoring and regulation, thermal elements such as thermal contacts can be additionally incorporated.

The level regulator is maintenance - free for nondeposit media.

The device has to be installed by specialists only.

Max. viscosity 150mm²/S

Technical data

Switching tube	Brass, max.L = 800mm
Connection	Brass G1/2" SW27 Brass G3/4" SW32 Brass M20 x 1,5 Brass M24 x 1,5
Nominal pressure	1 bar max.
Medium temperature	80°C
Float	Plastic, type SB17 / SR23 - 80°C max. Ceramic, type ELSB17 - 100°C max. (seal: viton)
Level contacts	Make/break contacts
Operating Voltage	For connection to certified intrinsically safe circuits in type of protection EExi only, EN 60079-11
Thermal elements	Pt100, thermal contact
Number of functions	max. 4 can be incorporated
Mounting position	vertical ± 30°

GOLDAMMER
REGELUNGSTECHNIK GMBH
SCHÖLLERSHEIDER STR. 15 PHONE (49) 2104/12093
P.O.BOX 10 02 17 FAX (49) 2104/12028
D-40802 METTMANN www.Goldammer-Regelungstechnik.com

NR 30 / 50 - EExi - Atex

Level regulator for tank insert

serial No. Date
EX-GB- 103 11/17

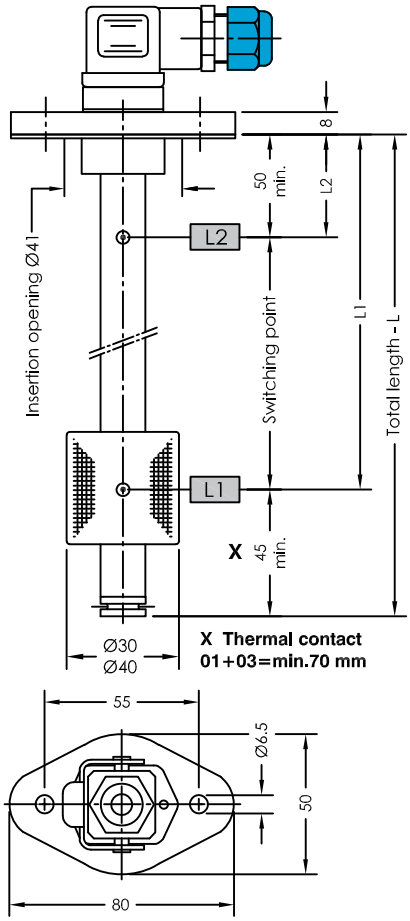

Ex-zone

No-Ex-Zone

Switching amplifier
Page EX-GB-900

Isolator
Page EX-GB-901

Level contact

Level contact
-03-

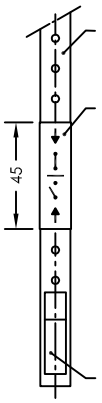

Strip with perforations 10mm

Bistable plain-contact cartridges. The minimum distance between two contact cartridges is **50mm**.
The make or break function is freely adjustable by 180°-rotation of the contact cartridge.

Thermal element

Order code

Specimen order

NR 50 EExi -SR40-L370-03-L1/300/S-T70Ö-M12

Float type
SR30
SR40

Total length-L
switching tube (mm)
Standard length
L=250 L=370
L=500 L=800

Level contact type
01 = fixed, plain
03 = adjustable, plain

Switching point L1-L3/
mm from sealing edge
Ö = break
S = make
Function with
increasing level

Plug socket connector
3+PE HAN I
M12 HAN II
DIN 43651

Pt100
Thermal contact
T10Ö
T40Ö
T50Ö
T60Ö (S)
T70Ö (S) (Ö preferred)
T80Ö (S)
T90Ö

Connector variants

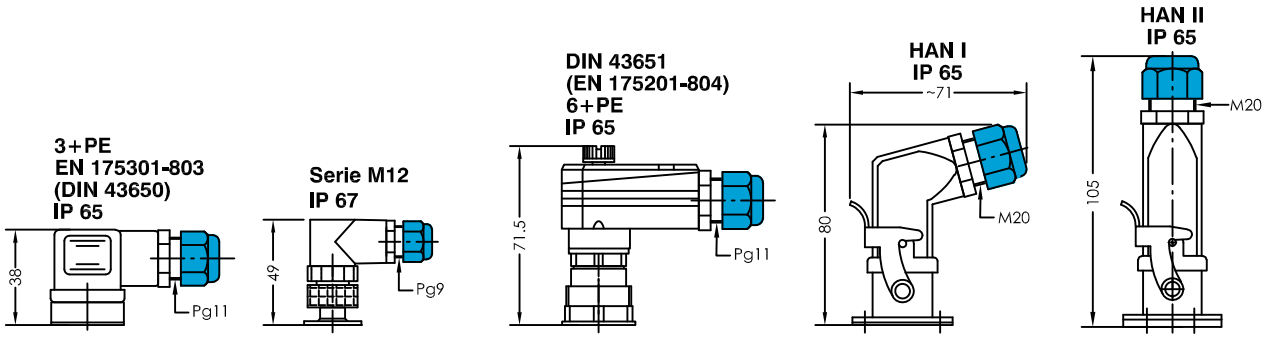

Technical data

Description

The level regulator type NR 30 / 50 - EExi - Atex for tank insert is a solenoid switch, operating without contact with the function of monitoring and regulating liquid levels and temperatures.
The switching tube contains bistable protective gas contacts. They may be fixed or alternatively mounted as an adjustable contact cartridge on a perforated strip. For fixed contacts, the contact intervals and their functions must be given. Plain contact cartridges can be subsequently adjusted for height. The function of make or break can then be altered by turning the cartridge through 180° degrees.
The permanent magnet, built into the float, switches the contacts when the level changes. The switching difference (hysteresis) is 4 mm. For temperature monitoring and regulation, thermal elements such as Pt100 and thermal contacts can be additionally incorporated.

The level regulator is maintenance - free for nondeposit media.
The device has to be installed by specialists only.
Max. viscosity SR30 - 150mm²/S
SR40 - 320mm²/S

Technical data

Switching tube	Brass, max.L = 1000mm
Connection flange	Polyamide with flat seal
Nominal pressure	1 bar max.
Temperature of medium	100°C max.
Float	Hard-PU, type SR30 / SR40
Level contacts	bistable make/break optional fixed or adjustable
Operating Voltage	For connection to certified intrinsically safe circuits in type of protection EExi only, EN 60079-11
Thermal elements	Pt100, thermal contact
Number of functions	max. 4 can be incorporated
Mounting position	vertical ± 30°

GOLDAMMER
REGELUNGSTECHNIK GMBH
SCHÖLLERSHEIDER STR. 15 PHONE (49) 2104/12093
P.O.BOX 10 02 17 FAX (49) 2104/12028
D-40802 METTMANN www.Goldammer-Regelungstechnik.com

NR 30 / 50 / 70 / 85 - V - EExi - Atex

Level regulator for tank insert

serial No. EX-GB- 104 Date 11/17

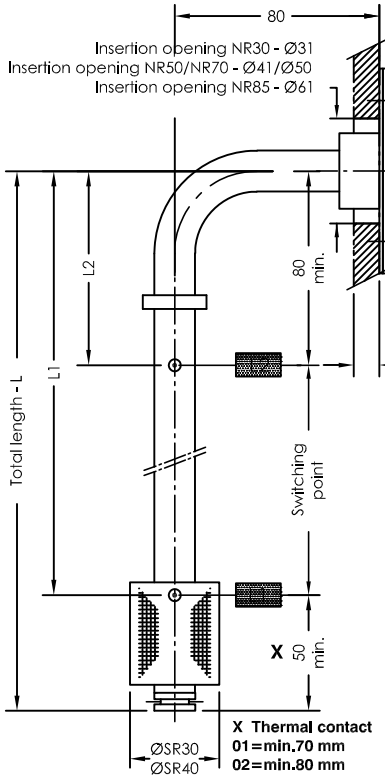

Ex-zone

No-Ex-Zone

Switching amplifier
Page EX-GB-900

Isolator
Page EX-GB-901

Connection flanges

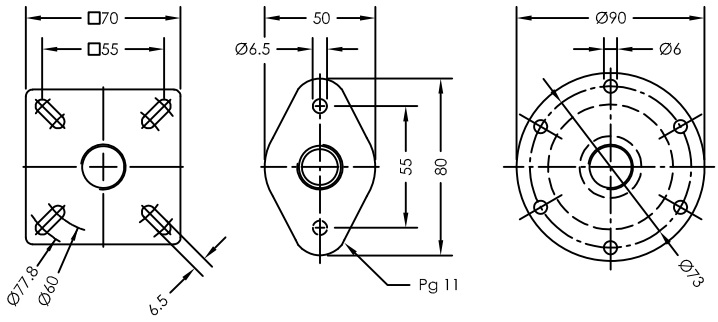

Flange 70 **Flange 50** **Flange 85**
according to DIN24557 part 2

Order code

Specimen order

NR 50-V-EExi-SR40-L270-01-L1/200/S-T70Ö-M12-24V

Connection
30 70
50 85

Float type
SR30
SR40

Total length-L
switching tube (mm)

Level contact type
01 = fixed, plain
02 = fixed, changeover

Switching point L1-L3/ mm from sealing edge
Ö = break
S = make
Function with increasing level

Plug socket connector
3+PE
M12
DIN 43651
HAN I
HAN II

Operating voltage
VDC 10-36 = 24V
VAC 10-230 = 230V

Pt100
Thermal contact
T10Ö
T40Ö
T50Ö
T60Ö (S)
T70Ö (S) (Ö preferred)
T80Ö (S)
T90Ö

Connector variants

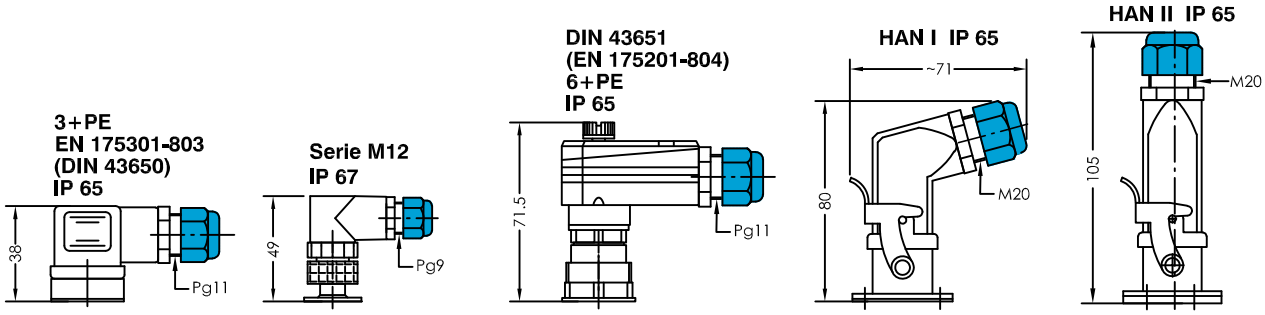

1 function max. 2 functions max. 3 functions max. 4 functions max. 4 functions max.

Technical data

Description

The level regulator type NR 30 / 50 / 70 / 85 - V - EExi for tank insert is a solenoid switch operating without contact with the function of monitoring and regulating liquid levels and temperatures.
The switching tube contains bistable protective gas contacts.
For fixed contacts, the contact intervals and their functions must be given. The permanent magnet built into the float switches the contacts when the level changes. The switching difference (hysteresis) is 4 mm. For temperature monitoring and regulation, thermal elements such as Pt100 and thermal contacts can be additionally incorporated.
The level controller is maintenance - free when nondeposit media are used.
For inductive loads, a protective circuit must be provided (free-wheeling diode/RC element).
The device must only be installed by specialists.
Max. viscosity SR 30 150mm²/S
SR 40 320mm²/S

Technical data

Switching tube	Brass, max.L = 1000mm
Connection flange	Polyamide with flat seal
Nominal pressure	1 bar max.
Temperature of medium	100°C max.
Float	Hard-PU, type SR30 / SR40
Level contacts	bistable make/break/changeover
Operating Voltage	For connection to certified intrinsically safe circuits in type of protection EExi only, EN 60079-11
Thermal elements	Pt100, thermal contact
Number of functions	max. 4 can be incorporated
Mounting position	vertical ± 30°

GOLDAMMER
REGELUNGSTECHNIK GMBH
SCHÖLLERSHEIDER STR. 15 PHONE (49) 2104/12093
P.O.BOX 10 02 17 FAX (49) 2104/12028
D-40802 METTMANN www.Goldammer-Regelungstechnik.com

NR 70 - EExi - Atex

Level regulator for tank insert

serial No. Date
EX-GB- 107 11/17

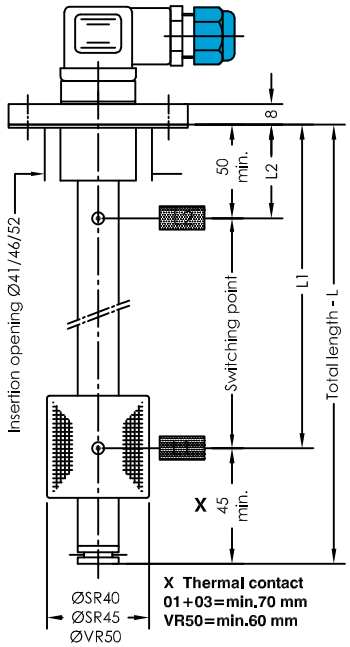

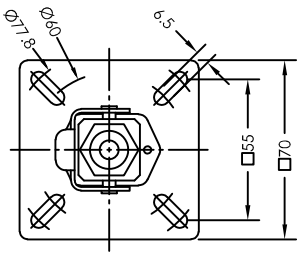

Ex-zone

No-Ex-Zone

Switching amplifier
Page EX-GB-900

Isolator
Page EX-GB-901

Level contact

Level contact
-03-

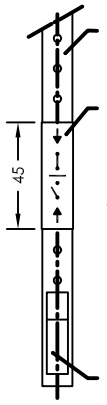

Strip with perforations 10mm

Bistable plain-contact cartridges. The minimum distance between two contact cartridges is **50mm**.
The make or break function is freely adjustable by 180°-rotation of the contact cartridge.

Thermal element

Order code

Specimen order

NR 70 EExi -SR40-L370-03-L1/300/S-T70Ö-MS-M12

Float type
SR40
SR45
VR50

Total length-L
switching tube (mm)
Standard length
L=250 L=370
L=500 L=800

Level contact type
01 = fixed, plain
03 = adjustable, plain

Switching point L1-L4/
mm from sealing edge
Ö = break
S = make
Function with
increasing level

Pt100
Thermal contact
T10Ö
T40Ö
T50Ö
T60Ö (S)
T70Ö (S)
T80Ö (S)
T90Ö
(Ö preferred)

Plug socket
connector
3+PE
DIN 43651
M12
HAN I
HAN II

Execution
MS = Brass
VA = Flange,
Switching tube
and float
stainless steel

Connector variants

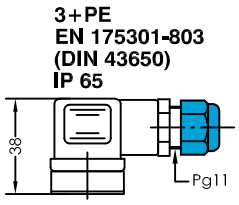

1 function max.

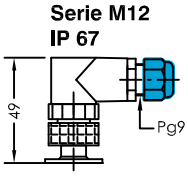

2 functions max.

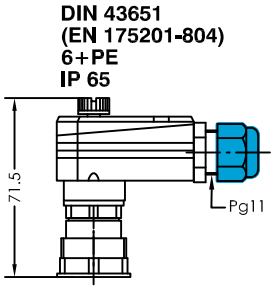

3 functions max.

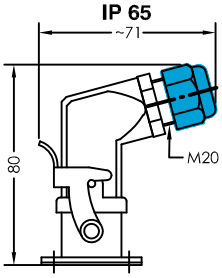

4 functions max.

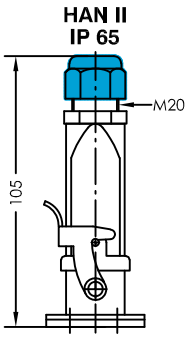

4 functions max.

Technical data

Description

The level regulator type NR 70 EExi for tank insert is a solenoid switch, operating without contact with the function of monitoring and regulating liquid levels and temperatures.
The switching tube contains bistable protective gas contacts. They may be fixed or alternatively mounted as an adjustable contact cartridge on a perforated strip. For fixed contacts, the contact intervals and their functions must be given. Plain contact cartridges can be subsequently adjusted for height. The function of make or break can then be altered by turning the cartridge through 180° degrees.
The permanent magnet built into the float, switches the contacts when the level changes. The switching difference (hysteresis) is 4 mm. For temperature monitoring and regulation, thermal elements such as Pt100 and thermal contacts can be additionally incorporated.
The level regulator is maintenance - free for nondeposit media.
The device has to be installed by specialists only.
Max. viscosity SR40 / SR45 - 150mm²/S
VR50 - 320mm²/S

Technical data

Switching tube	Brass or stainless steel max.L = 2000mm
Connection flange	Polyamide or stainless steel with flat seal
Nominal pressure	1 bar max.
Temperature of medium	100°C max.
Level contacts	bistable make/break optional fixed or adjustable
Operating Voltage	For connection to certified intrinsically safe circuits in type of protection EExi only, EN 60079-11
Thermal elements	Pt100, thermal contact
Number of functions	max. 4 can be incorporated
Mounting position	vertical ± 30°

GOLDAMMER
REGELUNGSTECHNIK GMBH
SCHÖLLERSHEIDER STR. 15 PHONE (49) 2104/12093
P.O.BOX 10 02 17 FAX (49) 2104/12028
D-40802 METTMANN www.Goldammer-Regelungstechnik.com

NR 85 - 150°C max. - EExi - Atex

Level regulator for tank insert

serial No. Date
EX-GB- 108b 11/17

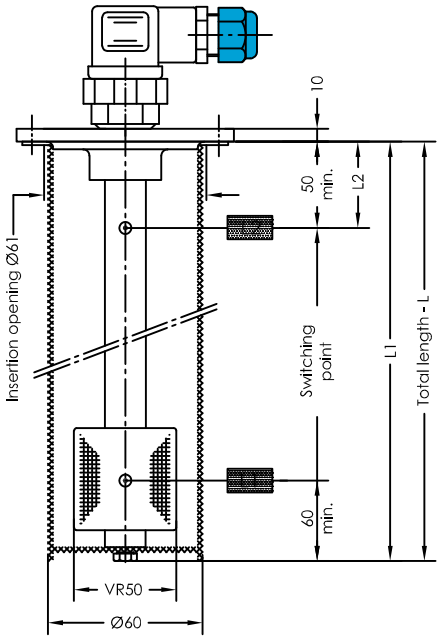

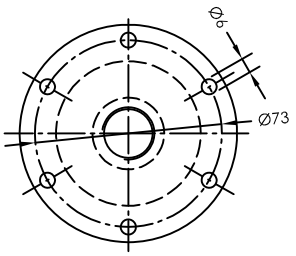

according to DIN24557 part 2

Ex-zone | No-Ex-Zone | Switching amplifier Page EX-GB-900 | Isolator Page EX-GB-901

Order code

Specimen order

NR 85-S-EExi-VR50-L370-02-L1/300/S-VA-3+PE-150°C

O=without protective tube
S=Protective tube

Float type
VR50

Total length-L
switching tube (mm)
standard length
L= 250 L= 800
L= 370 L=1000
L= 500 L=1200

Level contact type
02 = fixed

Switching point L1-L5/
mm from sealing edge
Ö = break
S = make
Function with
increasing level

Plug socket
connector
3+PE
DIN 43651
M12
HAN I
HAN II

Execution
VA - Flange,
Protective tube,
Switching tube,
and float
stainless steel

Connector variants

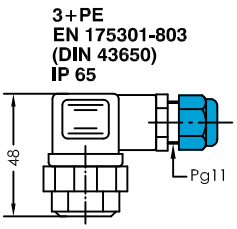

1 function max.

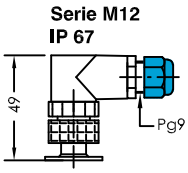

2 functions max.

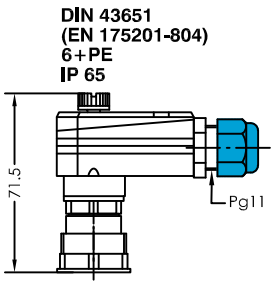

3 functions max.

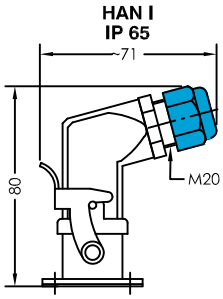

4 functions max.

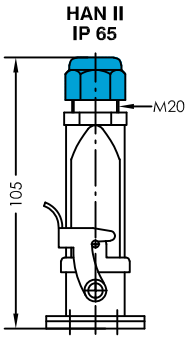

4 functions max.

Technical data

Description

The level regulator type NR 85 - 150°C max. - EExi - Atex for tank insert is a solenoid switch operating without contact with the function of monitoring and regulating liquid levels and temperatures.
The switching tube contains bistable protective gas contacts, fixed in position. For fixed contacts, the contact intervals and their functions must be given.
The permanent magnet built into the float switches the contacts when the level changes. The switching difference (hysteresis) is 4mm. For temperature monitoring and regulation, thermal elements such as Pt100 can be additionally incorporated.
The level controller is maintenance - free when nondeposit media are used.
For inductive loads, a protective circuit must be provided (free-wheeling diode/RC element).
The device must only be installed by specialists.

Max. viscosity 320mm²/S

Technical data

Protective tube	Stainless steel
Switching tube	Stainless steel max.L = 2000mm
Connection flange	Stainless steel with flat seal
Nominal pressure	1 bar max. - float stainless steel VR50
Temperature of medium	150°C max.
Level contacts	bistable make/break
Plug socket connector	3+PE - EN 175301-803 (DIN 43650)
Operating Voltage	For connection to certified intrinsically safe circuits in type of protection EExi only, EN 60079-11
Thermal elements	Pt100, thermal contact
Number of functions	max. 5 can be incorporated
Mounting position	vertical ± 30°

GOLDAMMER
REGELUNGSTECHNIK GMBH
SCHÖLLERSHEIDER STR. 15 PHONE (49) 2104/12093
P.O.BOX 10 02 17 FAX (49) 2104/12028
D-40802 METTMANN www.Goldammer-Regelungstechnik.com

NR 85 - EExi - Atex

Level regulator for tank insert

serial No. Date
EX-GB- 110 11/17

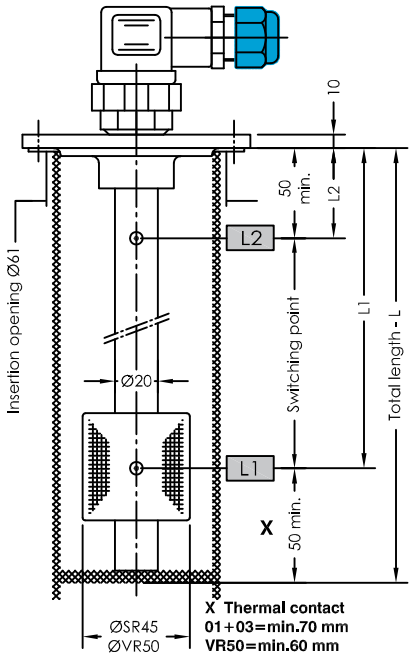

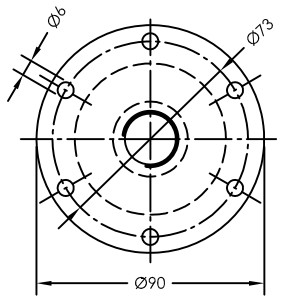

according to DIN24557 part 2

Ex-zone

No-Ex-Zone

Switching amplifier
Page EX-GB-900

Isolator
Page EX-GB-901

Level contact

Level contact
-03-

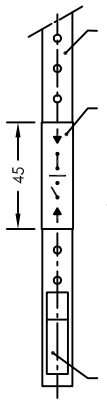

Strip with perforations 10mm

Bistable plain-contact cartridges. The minimum distance between two contact cartridges is **50mm**.
The make or break function is freely adjustable by 180°-rotation of the contact cartridge.

Thermal element

Order code

Specimen order

NR 85-O-EExi-SR45-L370-03-L1/200/S-T70Ö-MS-M12

O = with protective tube
S = without protective tube

Float type
SR45
VR50

Total length-L
switching tube (mm)
standard length
L=250 L=800
L=370 L=1000
L=500 L=1200

Level contact type
01 = fixed, plain
03 = adjustable, plain

Switching point L1-L4/
mm from sealing edge
Ö = break
S = make
Function with
increasing level

Pt100
Thermal contact
T10Ö
T40Ö
T50Ö
T60Ö (S) (Ö preferred)
T70Ö (S)
T80Ö (S)
T90Ö

Plug socket
connector
3+PE
DIN 43651
M12
HAN I
HAN II

Execution
MS = Brass
VA = Flange,
Switching tube
and float
stainless steel

Connector variants

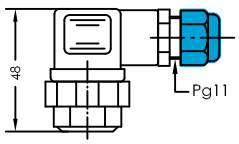

1 function max.

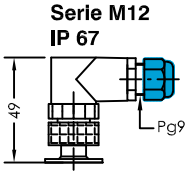

2 functions max.

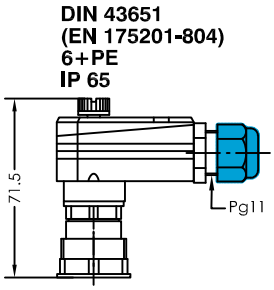

3 functions max.

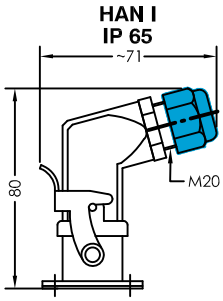

4 functions max.

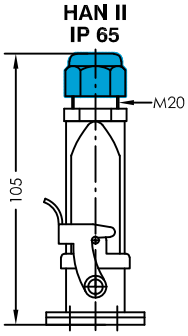

4 functions max.

Technical data

Description

The level regulator type NR 85 - EExi for tank insert is a solenoid switch, operating without contact with the function of monitoring and regulating liquid levels and temperatures.
The switching tube contains bistable protective gas contacts. They may be fixed or alternatively mounted as an adjustable contact cartridge on a perforated strip. For fixed contacts, the contact intervals and their functions must be given. Plain contact cartridges can be subsequently adjusted for height. The function of make or break can then be altered by turning the cartridge through 180° degrees. The permanent magnet built into the float, switches the contacts when the level changes. The switching difference (hysteresis) is 4 mm. For temperature monitoring and regulation, thermal elements such as Pt100 and thermal contacts can be additionally incorporated.
The level regulator is maintenance - free for nondeposit media.
The device has to be installed by specialists only.
Max. viscosity SR45 - 320mm²/S
VR50 - 320mm²/S

Technical data

Protective tube	Stainless steel
Switching tube	Brass or stainless steel, max.L = 2000mm
Connection flange	Polyamide or stainless steel with flat seal
Nominal pressure	1 bar max.
Temperature of medium	100°C max.
Level contacts	bistable make/break optional fixed or adjustable
Operating Voltage	For connection to certified intrinsically safe circuits in type of protection EExi only, EN 60079-11
Thermal elements	Pt100, thermal contact
Number of functions	max. 4 can be incorporated
Mounting position	vertical ± 30°

GOLDAMMER
REGELUNGSTECHNIK GMBH
SCHÖLLERSHEIDER STR. 15 PHONE (49) 2104/12093
P.O.BOX 10 02 17 FAX (49) 2104/12028
D-40802 METTMANN www.Goldammer-Regelungstechnik.com

NR 1" - 11/4" - 11/2" - EExi - Atex

Level regulator for tank insert

serial No. Date
EX - GB- 113 11/17

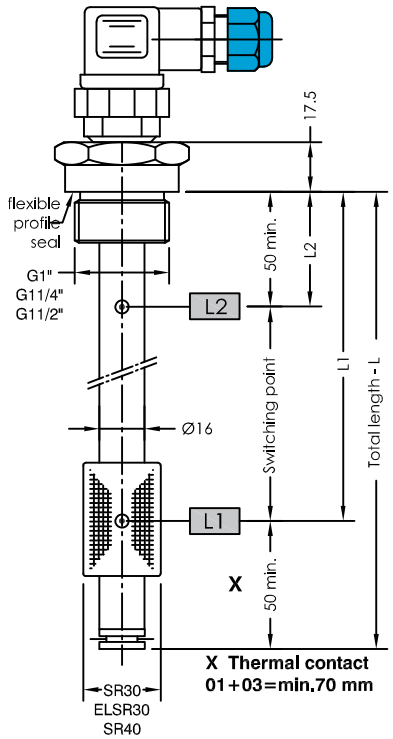

Ex-zone

No-Ex-Zone

Switching amplifier
Page EX-GB-900

Isolator
Page EX-GB-901

Level contact

Level contact
-03-

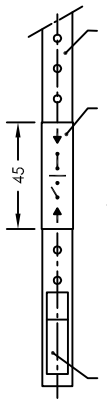

Strip with perforations 10mm

Bistable plain-contact cartridges. The minimum distance between two contact cartridges is **50mm**.
The make or break function is freely adjustable by 180°-rotation of the contact cartridge.

Thermal element

Order code

Specimen order

NR 1"-EExi-SR30-L370-03-L1/300/S-T70Ö-MS-M12

Float type
SR30
EL SR30
SR40
EL SR40

Total length-L
switching tube (mm)
Standardlängen
L=250 L=800
L=370 L=1000
L=500

Level contact type
01 = fixed, plain
03 = adjustable, plain

Switching point L1-L3/
mm from sealing edge
Ö = break
S = make
Function with
increasing level

Pt100
Thermal contact
T10Ö
T40Ö
T50Ö
T60Ö (S)
T70Ö (S)
T80Ö (S)
T90Ö
(Ö preferred)

Plug socket
connector
3+PE
M12
DIN 43651
HAN I
HAN II

Execution
MS = Brass
VA = Switching tube stainless steel float EL SR30

Connector variants

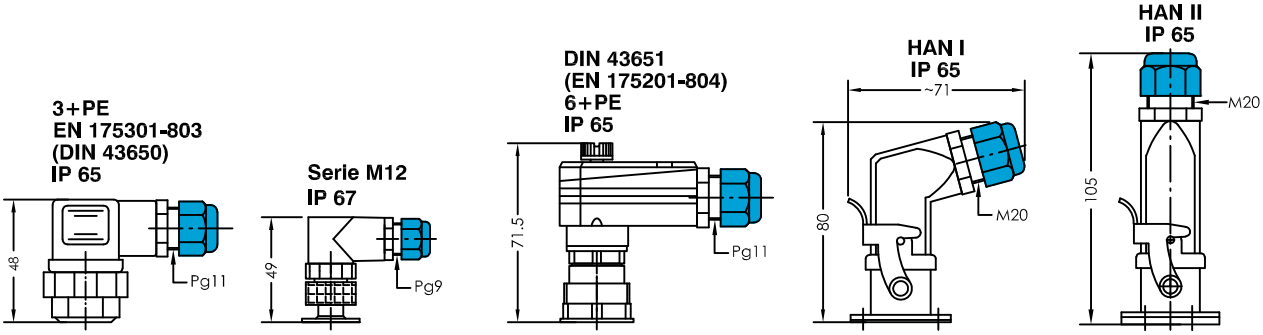

Technical data

Description

The level regulator type NR 1" - 11/4" - 11/2" - EExi - Atex for tank insert is a solenoid switch, operating without contact with the function of monitoring and regulating liquid levels and temperatures.
The switching tube contains bistable protective gas contacts. They may be fixed or alternatively mounted as an adjustable contact cartridge on a perforated strip. For fixed contacts, the contact intervals and their functions must be given. Plain contact cartridges can be subsequently adjusted for height. The function of make or break can then be altered by turning the cartridge through 180° degrees.
The permanent magnet built into the float, switches the contacts when the level changes. The switching difference (hysteresis) is 4 mm. For temperature monitoring and regulation, thermal elements such as Pt100 and thermal contacts can be additionally incorporated.
The level regulator is maintenance - free for nondeposit media.
The device has to be installed by specialists only.

Max. viscosity SR 30 - 150mm²/S
SR 40 - 320mm²/S

Technical data

Switching tube	Brass or stainless steel max.L = 1000mm
Connection flange	Brass or stainless steel G1" SW41
Nominal pressure	1 bar max.
Temperature of medium	100°C max.
Float	Hard-Pu, type SR30 / SR40 Ceramic, type ELSR30 / ELSR40
Level contacts	bistable make/break optional fixed or adjustable
Operating Voltage	For connection to certified intrinsically safe circuits in type of protection EExi only, EN 60079-11
Thermal elements	Pt100, thermal contact
Number of functions	max. 4 can be incorporated
Mounting position	vertical ± 30°

GOLDAMMER
REGELUNGSTECHNIK GMBH
SCHÖLLERSHEIDER STR. 15 PHONE (49) 2104/12093
P.O.BOX 10 02 17 FAX (49) 2104/12028
D-40802 METTMANN www.Goldammer-Regelungstechnik.com

NR 2" - EExi - Atex

Level regulator for tank insert

serial No. Date
EX-GB- 115a 11/17

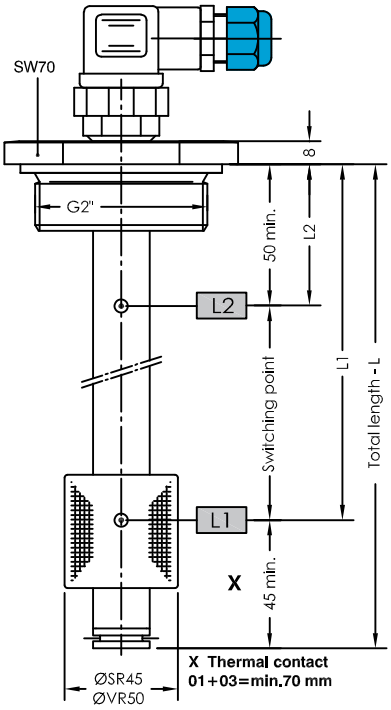

Ex-zone

No-Ex-Zone

Switching amplifier
Page EX-GB-900

Isolator
Page EX-GB-901

Level contact

Level contact
-03-

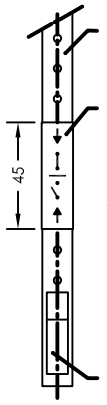

Strip with perforations 10mm

Bistable plain-contact cartridges. The minimum distance between two contact cartridges is **50mm**.
The make or break function is freely adjustable by 180°-rotation of the contact cartridge.

Thermal element

Order code

Specimen order

NR 2"-EExi-SR45-L370-03-L1/300/S-T70Ö-MS-M12

Float type
SR45
VR50

Total length-L
switching tube (mm)
Standard length
L=250 L=800
L=370 L=1000
L=500 L=1200

Level contact type
01 = fixed, plain
03 = adjustable, plain

Switching point L1-L5/
mm from sealing edge
Ö = break
S = make
W= changeover
Function with
increasing level

Pt100
Thermal contact
T10Ö
T40Ö
T50Ö
T60Ö (S)
T70Ö (S) (Ö preferred)
T80Ö (S)
T90Ö

Plug socket
connector
3+PE
DIN 43651
M12
HAN I
HAN II

Execution
MS = Brass
VA = Switching tube and float stainless steel

Connector variants

3+PE
EN 175301-803
(DIN 43650)
IP 65

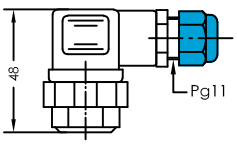

1 function max.

Serie M12
IP 67

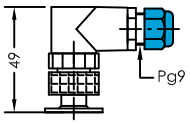

2 functions max.

DIN 43651
(EN 175201-804)
6+PE
IP 65

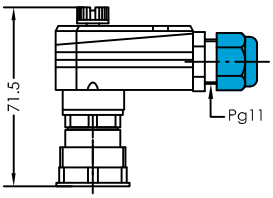

3 functions max.

HAN I
IP 65

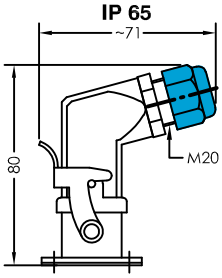

4 functions max.

HAN II IP 65

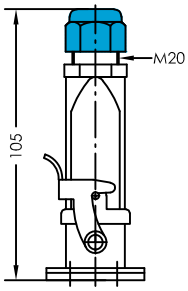

4 functions max.

Technical data

Description

The level regulator type NR 2" - EExi for tank insert is a solenoid switch, operating without contact with the function of monitoring and regulating liquid levels and temperatures.
The switching tube contains bistable protective gas contacts. They may be fixed or alternatively mounted as an adjustable contact cartridge on a perforated strip. For fixed contacts, the contact intervals and their functions must be given. Plain contact cartridges can be subsequently adjusted for height. The function of make or break can then be altered by turning the cartridge through 180° degrees.
The permanent magnet built into the float, switches the contacts when the level changes. The switching difference (hysteresis) is 4 mm. For temperature monitoring and regulation, thermal elements such as Pt100 and thermal contacts can be additionally incorporated.
The level regulator is maintenance - free for nondeposit media.
The device has to be installed by specialists only.

Max. viscosity SR 45 - 320mm²/S
VR 50 - 320mm²/S

Technical data

Switching tube	Brass or stainless steel max.L = 3000mm
Connection	galv. Steel or stainless steel G2", SW70 with ring seal Cu, DIN 7603
Nominal pressure	1 bar max. VR50 - 10 bar max.
Temperature of medium	100°C max.
Float	Hard-Pu SR45, stainless steel VR50
Level contacts	bistable make/break/changeover optional fixed or adjustable
Operating Voltage	For connection to certified intrinsically safe circuits in type of protection EExi only, EN 60079-11
Thermal elements	Pt100, thermal contact
Number of functions	max. 4 can be incorporated
Mounting position	vertical ± 30°
*Thermal contact	Sheet TR-GB-507

GOLDAMMER
REGELUNGSTECHNIK GMBH
SCHÖLLERSHEIDER STR. 15 PHONE (49) 2104/12093
P.O.BOX 10 02 17 FAX (49) 2104/12028
D-40802 METTMANN www.Goldammer-Regelungstechnik.com

NRA 6R/BA... - EExi - Atex

Level controller for surface mounting

serial No. Date
EX-GB- 200c 05/17

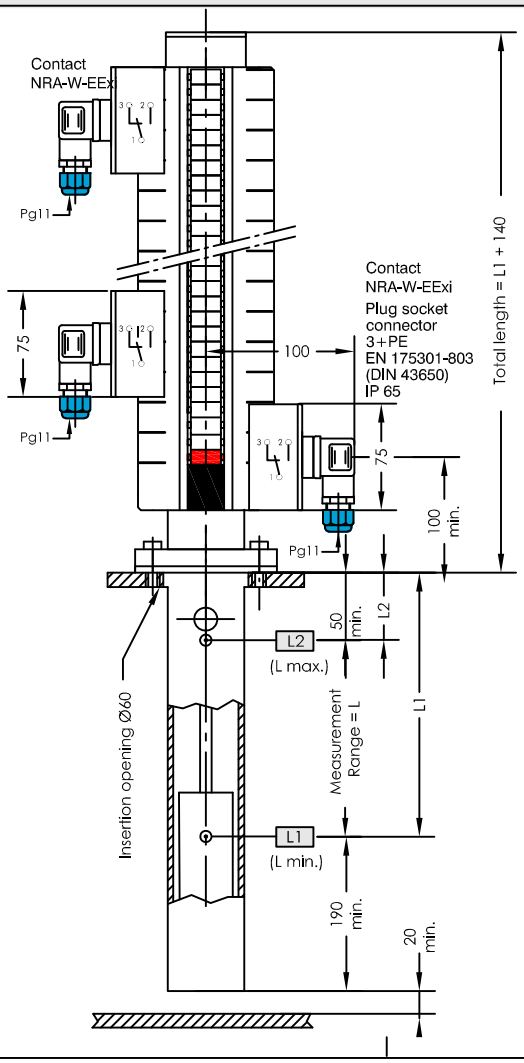

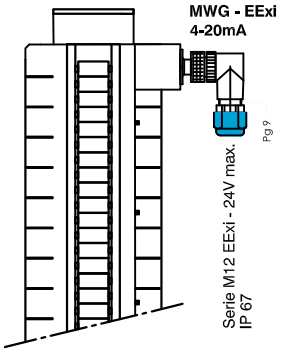

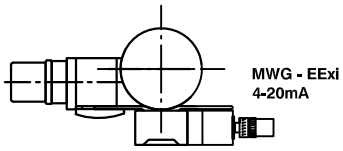

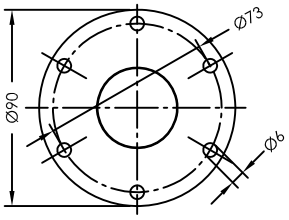

Flange NR85
according to
DIN24557 part 2

The total resistance field devices / connecting lines to transmitter is max. 200Ω

Ex-zone

No-Ex-Zone

NRA-W-EExi-Switching amplifier
Page EX-GB-900

MWG 3-wire - Transmitter 0/4-20mA - Page EX-GB-902
measuring range configured
Item number 902.546 - 1-channel level

Order code

Specimen order

NRA 6R/BA-EExi-PUAFBx500-3-/NRA-W-EExi-MWG-EExi

Connection
BA Flange

Float type
EL MD6
PU AFB

Measurement Range = L in mm

Transmitter type
MWG-EExi

Number of level contact
Type: NRA-W

Technical data

Description

Type NRA 6/BA...-EExi level regulator is used for container mounting. Optical level height monitoring without external power supply via a magnetic rotary display in a transparent tube.
By fitting infinitely adjustable bistable electromagnetic changeover contact elements on the visible indicator scale various open-loop control values can be set.
For continuous teletransmission a transmitter can be grown.
The output signal amounts 4-20 mA.

When the filling level changes, the transmitter changes the total resistance and is converted with an Ex approved relay into 4-20mA datasheet EX-D-902.This is installed in the No-Ex-Zone.

The device has to be installed by specialists only.

Level controller with EL-floats are resistant to:
mineral oil, hydrous solution, phosphoric ester, triglyceride (rape oil), synthetic ester, polyclycols.

Technical data

Nominal pressure	6 bar max. ELMD6 pressureless PU AFB
Contact assembly	stainless steel, protective tube stainless steel
Measuring range	max. 2000mm
Medium temperature	80°C max.
Medium density	0,85 kg/dm³ min.
Float	Ceramic Type ELMD6 , PU AFB
Level contacts	bistable changeover contacts, number arbitrarily
NRA-W-EExi	Intrinsic safety
Switching amplifier	Datasheet EX-GB-900
Transmitter	three-wire configured, for connection to EExi-transmitter Datasheet EX-GB-902
Contact grid	7,5 /15 mm
Operating voltage	For connection to certified intrinsically safe circuits in type of protection EExi only, EN 60079-11

GOLDAMMER
REGELUNGSTECHNIK GMBH

SCHÖLLERSHEIDER STR. 15 PHONE (49) 2104/12093
P.O.BOX 10 02 17 FAX (49) 2104/12028
D-40802 METTMANN www.Goldammer-Regelungstechnik.com

NRA 25R... - EExi - Atex

Level controller for surface mounting

serial No. Date
EX-GB- 201a 04/16

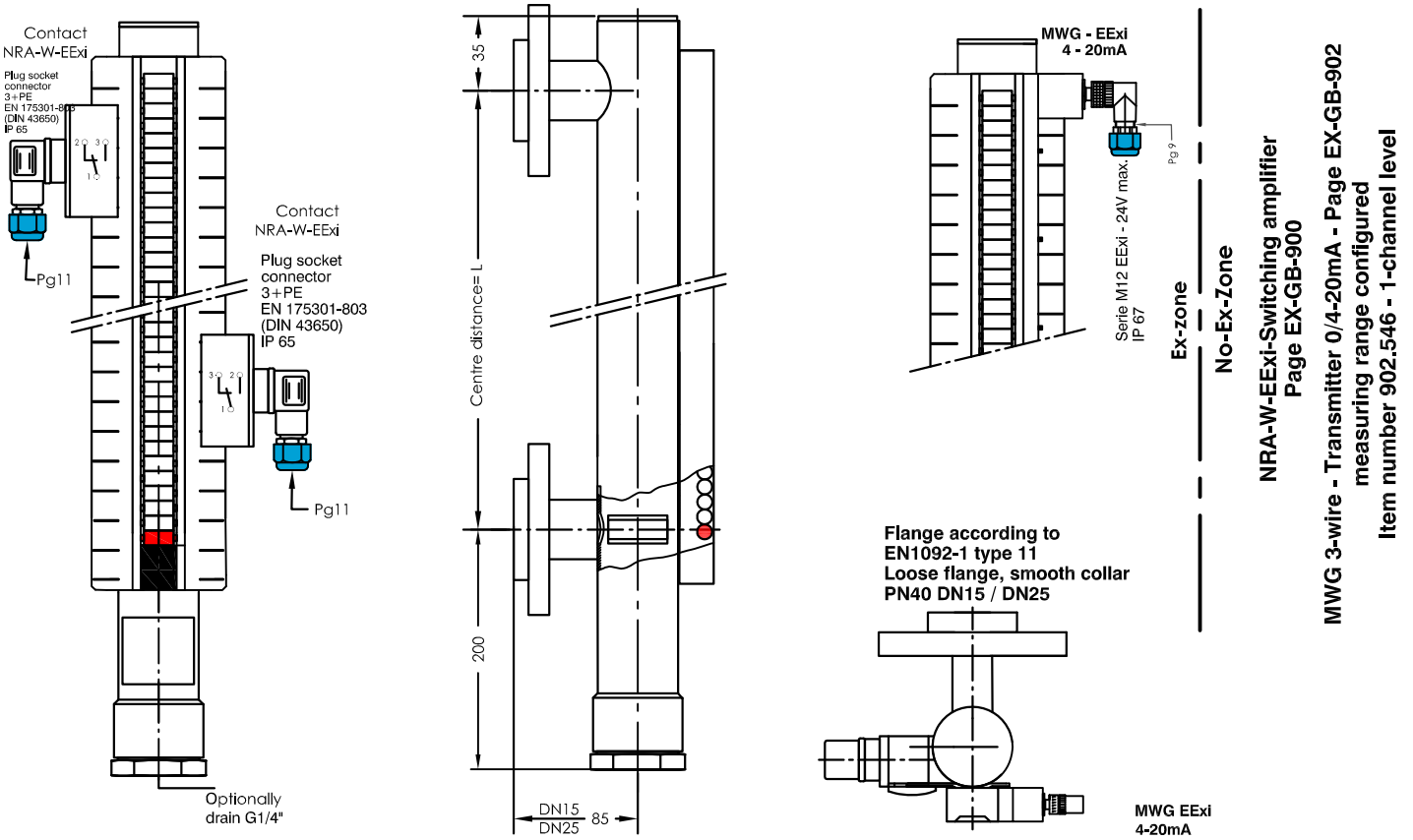

Order code

Specimen order

NRA 25R - EExi / 03 x 2000 - 3/NRA-W-EExi - MWG - G1/4"

Connection
03 Flange DN15
04 Flange DN25

Centre distance=L in mm

Number of level contact type: NRA-W-EExi

Transmitter type: MWG-EExi

Drain G1/4"

Technical data

Description

The level controller type NRA 25R/... EExi is designed for surface mounting on containers as communicating vessels. Optical level height monitoring without external power supply via a magnetic rotary display in a transparent tube.
By fitting infinitely adjustable bistable electromagnetic changeover contact elements on the visible indicator scale various open-loop control values can be set.

When the filling level changes, the transmitter changes the total resistance and is converted with an Ex approved relay into 4-20mA.

This is installed in the No-Ex-Zone.

The device has to be installed by specialists only.

Level controller are resistant to: mineral oil, hydrous solution, phosphoric ester, triglyceride (rape oil), synthetic ester, polyclycols.

Technical data

Nominal pressure	25 bar max.
Float tube	Stainless steel, max. L=6000 mm
Connecting parts	Stainless steel, magnetic rotary display
Medium temperature	120°C max.
Medium density	0,72 kg/dm³ min.
Float	Stainless steel type MD25
Level contacts	bistable changeover contacts
NRA-W-EExi	Intrinsic safety
Switching amplifier	Page EX-GB-900
Transmitter	three-wire
Contact grid	7,5mm
Operating voltage	For connection to certified intrinsically safe circuits in type of protection EExi only, EN 60079-11

GOLDAMMER
REGELUNGSTECHNIK GMBH
SCHÖLLERSHEIDER STR. 15 PHONE (49) 2104/12093
P.O.BOX 10 02 17 FAX (49) 2104/12028
D-40802 METTMANN www.Goldammer-Regelungstechnik.com

NRA 25R... - EExi - Atex

Level controller for surface mounting with integrated stop valve

serial No. Date
EX-GB- 201b 04/16

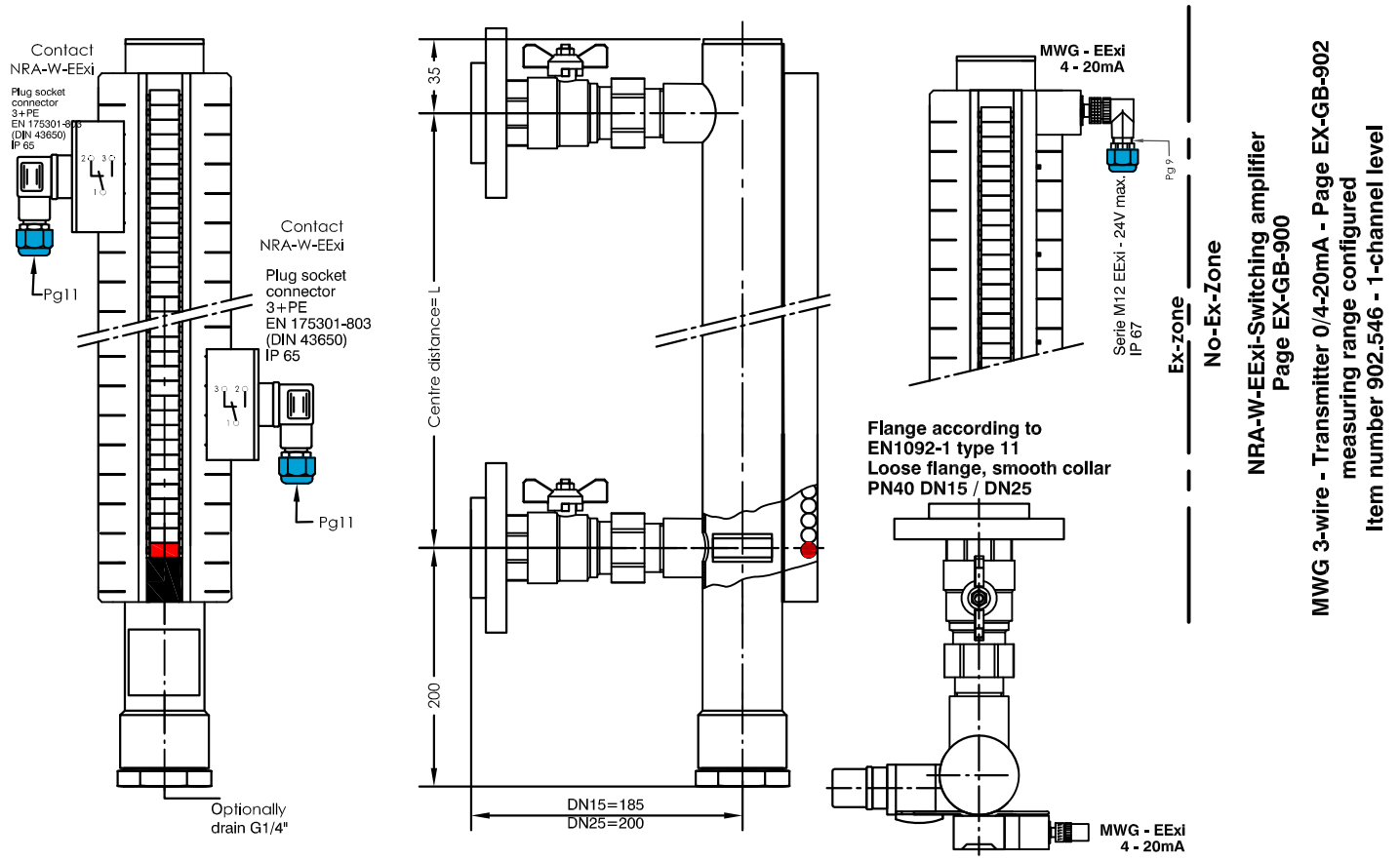

Order code

Specimen order

NRA 25R - EExi / 07 x 2000 - 3/NRA-W-EExi - MWG - G1/4"

Connection
07 Ball valve/flange DN15
08 Ball valve/flange DN25

Centre distance=L in mm

Number of level contact type: NRA-W-EExi

Transmitter type: MWG-EExi

Drain G1/4"

Technical data

Description

The level controller type NRA 25R/... EExi is designed for surface mounting on containers as communicating vessels. Optical level height monitoring without external power supply via a magnetic rotary display in a transparent tube.
By fitting infinitely adjustable bistable electromagnetic changeover contact elements on the visible indicator scale various open-loop control values can be set.

When the filling level changes, the transmitter changes the total resistance and is converted with an Ex approved relay into 4-20mA.

This is installed in the No-Ex-Zone.

The device has to be installed by specialists only.

Level controller are resistant to: mineral oil, hydrous solution, phosphoric ester, triglyceride (rape oil), synthetic ester, polyclycols.

Technical data

Nominal pressure	25 bar max.
Float tube	Stainless steel, max. L=6000 mm
Connecting parts	Stainless steel, magnetic rotary display
Medium temperature	120°C max.
Medium density	0,72 kg/dm³ min.
Float	Stainless steel type MD25
Level contacts	bistable changeover contacts
NRA-W-EExi	Intrinsic safety
Switching amplifier	Page EX-GB-900
Transmitter	three-wire
Contact grid	7,5mm
Operating voltage	For connection to certified intrinsically safe circuits in type of protection EExi only, EN 60079-11

GOLDAMMER
REGELUNGSTECHNIK GMBH
SCHÖLLERSHEIDER STR. 15 PHONE (49) 2104/12093
P.O.BOX 10 02 17 FAX (49) 2104/12028
D-40802 METTMANN www.Goldammer-Regelungstechnik.com

NR 1/2"-3/4"-M20-M24-EExi-MA-Atex

Level - temperature controller with resistance measuring chain and transmitter, output 4-20 mA

serial No.	Date
EX-GB- 305a/1	08/17

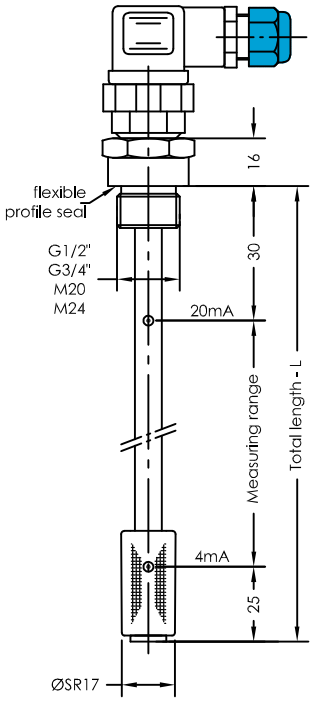

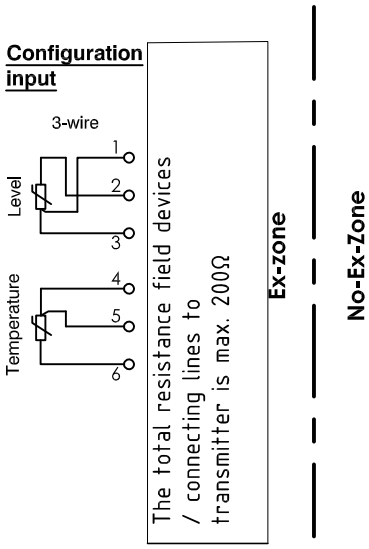

Included in scope of delivery:
Transmitter 0/4-20mA - Page EX-GB-902
measuring range configured
Item number 902.546 - 1-channel level
Item number 902.541 - 2-channel level + temperature

Order code

Specimen order

NR 1/2"-EExi-MA-SR17-L250-T-M12

Tank connection:
1/2"
3/4"
M20
M24

Float type
SR17

Total length-L
switching tube (mm)
Standard length
L=250
L=370

Plug socket connector
3+PE
M12
DIN 43651

T = temperature
0 = without temperature

Connector variants

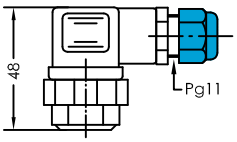

3+PE
EN 175301-803
(DIN 43650)
IP 65

1 x three-wire

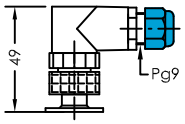

Serie M12
24Vmax.
IP 67

1 x three-wire

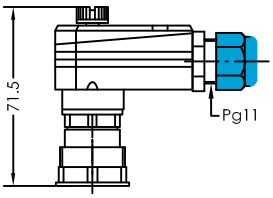

DIN 43651 (EN 175201-804)
6+PE IP 65

2 x three-wire

Technical data

Description

The level temperature regulator, type NR 1/2"-3/4"-M20-M24-MA-EExi, designed for container installation, is a contact less electromagnetic switch for continuous teletransmission of liquid levels and temperature. Via cables of any length, level and temperature can be continuously evaluated for automatic control and display. The level controller contains a resistance measuring chain and a Pt100 resistor at temperature.
On change of the filling level the total resistance changes and will be converted with the Ex approved transmitter - Page EX-GB-902 into 4-20mA. This is installed in the No-Ex-Zone.
When changing the temperature, the Pt100 changes its resistance and will also be converted to 4-20mA in the No-Ex-Zone.

The level regulator is maintenance - free for nondeposit media.
The device has to be installed by specialists only.
Can also be supplied in stainless steel on request.

Max. viscosity 150mm²/S

Technical data

Switching tube	Brass, max.L = 370mm
Connection thread	Brass G1/2" SW27 Brass G3/4" SW32 Brass M20 x 1,5 Brass M24 x 1,5
Nominal pressure	1 bar max.
Float	NBR SR17
Temperature of medium	80°C max.
Measuring range	0/4-20mA=0-100°C=0-100%
Thermal element	Pt100
Contact grid	5 mm
Transmitter	three-wire, Conection to EExi-transmitter Page EX-GB-902
Mounting position	vertical ± 30°

Other temperature ranges on request

GOLDAMMER
REGELUNGSTECHNIK GMBH

SCHÖLLERSHEIDER STR. 15 PHONE (49) 2104/12093
P.O.BOX 10 02 17 FAX (49) 2104/12028
D-40802 METTMANN www.Goldammer-Regelungstechnik.com

NR 1" - 11/4" - 11/2" - MA - EExi - Atex

Level - temperature controller with resistance measuring chain and transmitter, output 4-20 mA

serial No.	Date
EX-GB- 305b	08/17

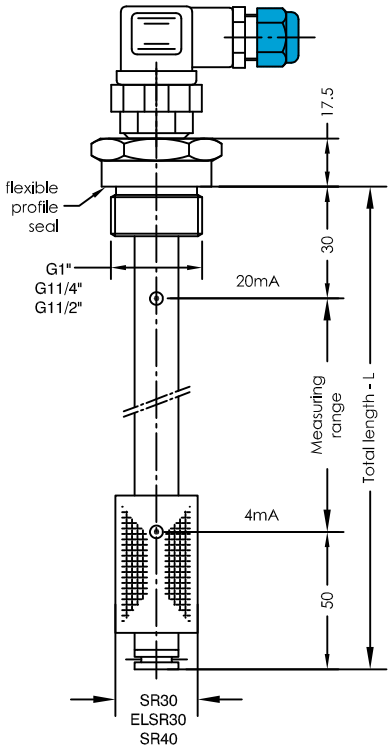

Configuration input

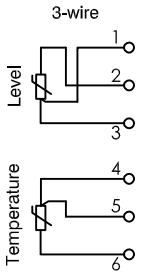

The total resistance field devices / connecting lines to transmitter is max. 200Ω

Ex-zone | **No-Ex-Zone**

Included in scope of delivery:
Transmitter 0/4-20mA - Page EX-GB-902
measuring range configured
Item number 902.546 - 1-channel level
Item number 902.541 - 2-channel level + temperature

Order code

Specimen order

NR 1"-EExi-MA-SR30-L300-T-MS-M12

Float type
SR30
EL SR30
SR40

Total length-L
switching tube (mm)
standard length
L=250 L=800
L=370 L=1000
L=500

T = temperature
0 = without temperature

Plug socket connector
3+PE
DIN 43651
M12
HAN I
HAN II

Execution
MS = Brass
VA = Switching tube - stainless steel float EL SR30

Connector variants

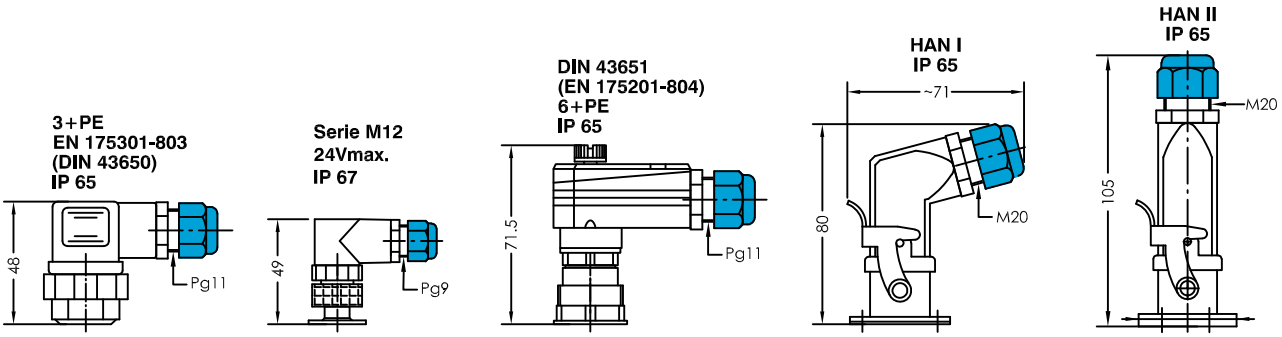

Technical data

Description

The level temperature regulator, type NR 1" - 11/4" - 11/2" - MA - EExi - Atex, designed for container installation, is a contact less electromagnetic switch for continuous teletransmission of liquid levels and temperature.
Via cables of any length, level and temperature can be continuously evaluated for automatic control and display. The level controller contains a resistance measuring chain and a Pt100 resistor at temperature.
On change of the filling level the total resistance changes and will be converted with the Ex approved transmitter - Page EX-GB-902 into 4-20mA. This is installed in the No-Ex-Zone.
When changing the temperature, the Pt100 changes its resistance and will also be converted to 4-20mA in the No-Ex-Zone.

The level regulator is maintenance - free for nondeposit media.
The device has to be installed by specialists only.
Can also be supplied in stainless steel on request.

Max. viscosity SR 30 - 150mm²/S
SR 40 - 320mm²/S

Technical data

Protective tube	Brass, max.L = 1000mm
Connection flange	Brass G1", G11/4", G11/2"
Nominal pressure	1 bar max.
Float	Hard-Pu, type SR30 / SR40 Ceramic, type ELSR30
Temperature of medium	100°C max.
Measuring range	0/4-20mA=0-100°C=0-100%
Thermal element	Pt100
Transmitter	three-wire, Conection to EExi-transmitter Page EX-GB-902
Contact grid	7.5 mm
Mounting position	vertical ± 30°

Other temperature ranges on request

GOLDAMMER
REGELUNGSTECHNIK GMBH
SCHÖLLERSHEIDER STR. 15 PHONE (49) 2104/12093
P.O.BOX 10 02 17 FAX (49) 2104/12028
D-40802 METTMANN www.Goldammer-Regelungstechnik.com

NTR ... - K - EExi - Atex

Level - Temperature - Capillary tube - Regulator

serial No. Date
EX-GB- 402 08/17

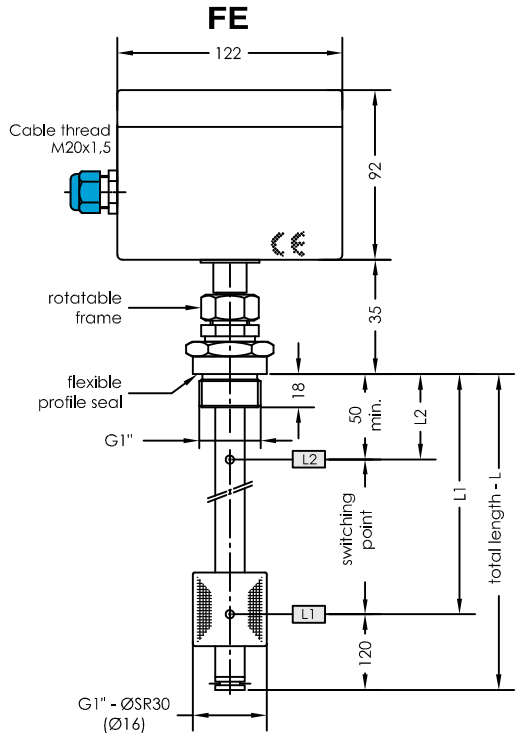

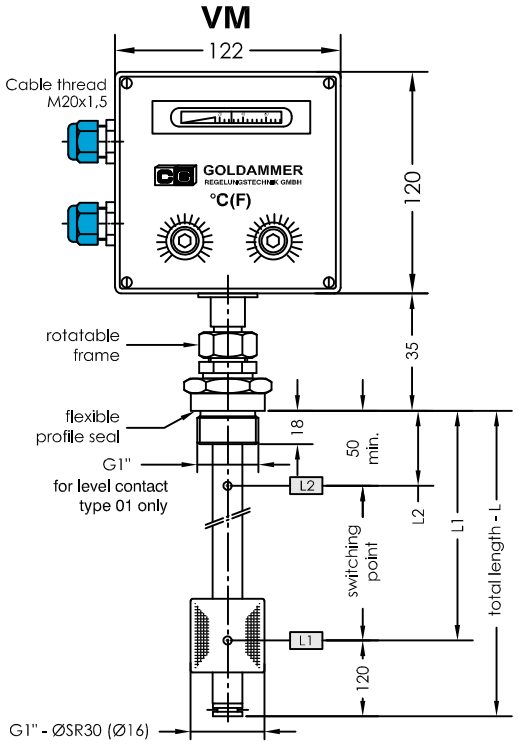

Ex-zone | No-Ex-Zone

Switching amplifier Page EX-GB-900

Terminal diagram

Terminal diagram

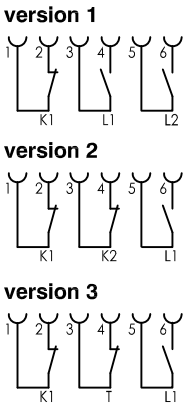

Function tank empty

Connection flanges

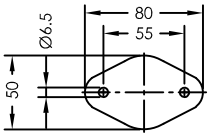

Flange 50, SR40 — Insertion opening Ø 41

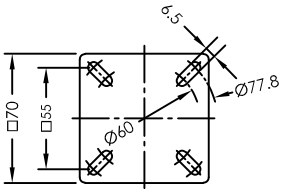

Flange 70, SR45, VR50 — Insertion opening Ø 46/51

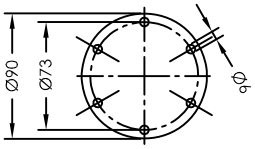

Flange 85, SR45, VR50
according to DIN24557 part 2 — Insertion opening Ø 61

Order code

Specimen order

NTR 50-EExi-SR40-K2-A-FE-L370-01-L1/250/S-T70Ö - I

Connection
G1" 50
70 85

Float
SR30 SR45
SR40 VR50

Temperature
K1= 1 contact
K2= 2 contacts

A= indication of actual temperature
O= without indication

Construction
FE= permanent installation
VM= vertical installation

Total length (mm)

I =0 to 120°C

Thermal contact*
T10Ö
T40Ö
T50Ö
T60Ö (S) (Ö preferred)
T70Ö (S)
T80Ö (S)
T90Ö

Switching point L1-L3/ mm from sealing edge
Ö = break
S = make
Function with increasing level

Level contact type
01 = fixed, plain
03 = adjustable, plain

Technical data

Description

The level-temperature-capillary tube-regulator NTR... K-EExi-Atex for tank insert is a combined unit for level and temperature regulation.

To monitor the level, the switching tube contains bistable level contacts which are fixed in position. The permanent magnet built into the float switches the contacts when the level changes.
The switching difference (hysteresis) is 4mm. The temperature is regulated with the capillary tube device. It operates on the principle of liquid expansion.

The thermal probes are located in the lower half of the switching tube. A maximum of 2 temperature contacts, adjustable from 0 to 120°C, and an actual temperature display, optional also with a thermal contact as fixed contact for example T60Ö available, can be incorporated.

The device has to be installed by specialists only.

Max. viscosity SR30 - 150mm²/S
SR 40 / SR45 - 320mm²/S
VR50 - 320mm²/S

Technical data

Switching tube	Brass, max. L = 1400mm
Switch cabinet	Polyester IP65
Tank connection	optional, with seal
Nominal pressure	1 bar max. - float Hard Pu SR30, SR40, SR45 10 bar max. - float stainless steel VR50
Temp.of medium	100 °C max.
Level contacts	bistable make/break, fixed
Temperature relay	break
Switching accuracy	±5k
Switching difference	5k±1k
electric. connection	Cable thread M20x1,5 Ex e, increased safety, Ex tD A21 - protected by housing Connection terminal strip 2,5 mm² tightening torque 0,4Nm max.
Temperature range	0 to 120°C, adjustable
Temperature display	0 to 120°C ±3°
Number of functions	max. 3 can be incorporated
Mounting position	vertical ± 30°
*Thermal contact	Sheet TR-GB-507

GOLDAMMER
REGELUNGSTECHNIK GMBH
SCHÖLLERSHEIDER STR. 15 PHONE (49) 2104/12093
P.O.BOX 10 02 17 FAX (49) 2104/12028
D-40802 METTMANN www.Goldammer-Regelungstechnik.com

NTR ... - K - EExi - Atex

Level - Temperature - Capillary tube - Regulator

serial No. Date
EX-GB- 403 08/17

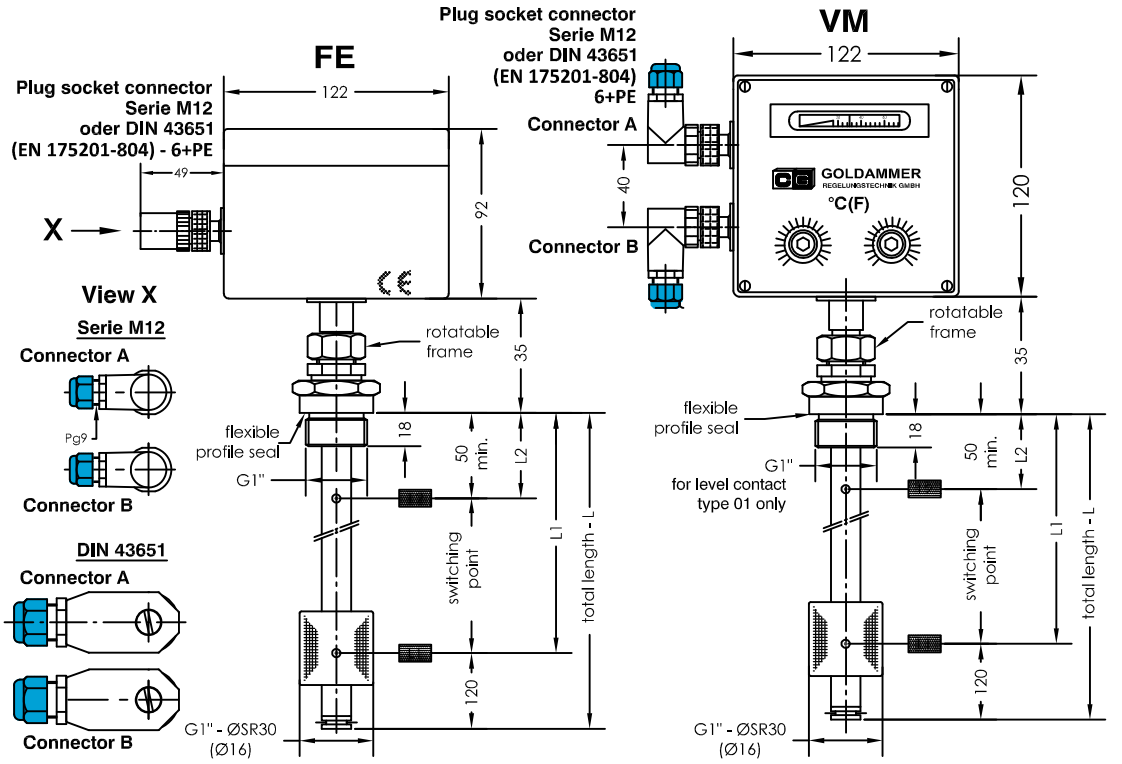

Ex-zone

No-Ex-Zone

Switching amplifier
Page EX-GB-900

Terminal diagram

Terminal diagram

Connector A

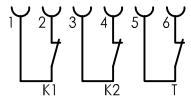

Connector B

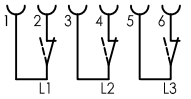

Function tank empty

Connection flanges

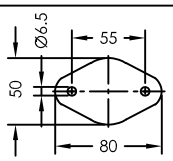

Flange 50, SR40
Insertion opening Ø41

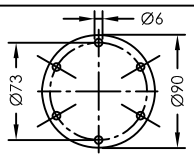

Flange 85, SR45, VR50
according to DIN24557 part 2
Insertion opening Ø 61

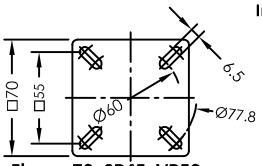

Flange 70, SR45, VR50
Insertion opening Ø 46/51

Connector variants

Serie M12
24Vmax.
IP 67

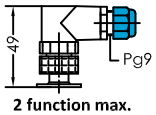

2 function max.

DIN 43651 (EN 175201-804)
6+PE IP 65

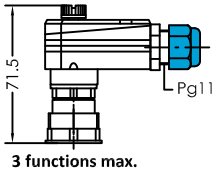

3 functions max.

Order code

Specimen order

NTR 50-EExi-SR40-K2-A-FE-L370-01-L1/250/S-T70Ö-I-M12

Connection
G1"
50
70
85

Float
SR30
SR40
SR45
VR50

Temperature
K1= 1 contact
K2= 2 contacts

A= indication of actual temperature
O= without indication

Construction
FE= permanent installation
VM= vertical installation

Total length (mm)

I=0 to 120°C

Plug socket connector
M12
DIN 43651

Thermal contact*
T10Ö
T40Ö
T50Ö
T60Ö (S)
T70Ö (S)
T80Ö (S)
T90Ö
(Ö preferred)

Switching point L1-L3/ mm from sealing edge
Ö = break
S = make
Function with increasing level

Level contact type
01 = fixed, plain
02 = fixed, changeover
03 = adjustable, plain

Technical data

Description

The level-temperature-capillary tube-regulator NTR... K-EExi-Atex for tank insert is a combined unit for level and temperature regulation.
To monitor the level, the switching tube contains bistable level contacts which are fixed in position. The permanent magnet built into the float switches the contacts when the level changes. The switching difference (hysteresis) is 4mm. The temperature is regulated with the capillary tube device. It operates on the principle of liquid expansion. The thermal probes are located in the lower half of the switching tube. A maximum of 2 temperature contacts, adjustable from 0 to 120°C, and an actual temperature display, optional also with a thermal contact as fixed contact for example T60Ö available, can be incorporated.

The device has to be installed by specialists only.

Max. viscosity SR30 - 150mm²/S
SR40 / SR45 - 320mm²/S
VR50 - 320mm²/S

Technical data

Switching tube	Brass, max. L = 1400mm
Switch cabinet	Polyester IP65
Tank connection	optional, with seal
Nominal pressure	1 bar max. VR50 - 10 bar max.
Temp.of medium	100 °C max.
Level contacts	bistable make/break, fixed
Temperature relay	break
Switching accuracy	±5k
Switching difference	5k±1k
electric. connection	DIN 43651 IP65 or serie M12 IP67 for connection to certified intrinsicallysafe circuits in type of protection EExi only, EN 60079-11
Temperature range	0 to 120°C, adjustable
Temperature display	0 to 120°C ±3°
Number of functions	max. 3 can be incorporated
Mounting position	vertical ± 30°
*Thermal contact	Sheet TR-GB-507

GOLDAMMER
REGELUNGSTECHNIK GMBH
SCHÖLLERSHEIDER STR. 15
P.O.BOX 10 02 17
D-40802 METTMANN
PHONE (49) 2104/12093
FAX (49) 2104/12028
www.Goldammer-Regelungstechnik.com

TR 12 - K - EExi - Atex

Temperature - Capillary tube - Regulator

serial No. Date
EX-GB- 500c 08/17

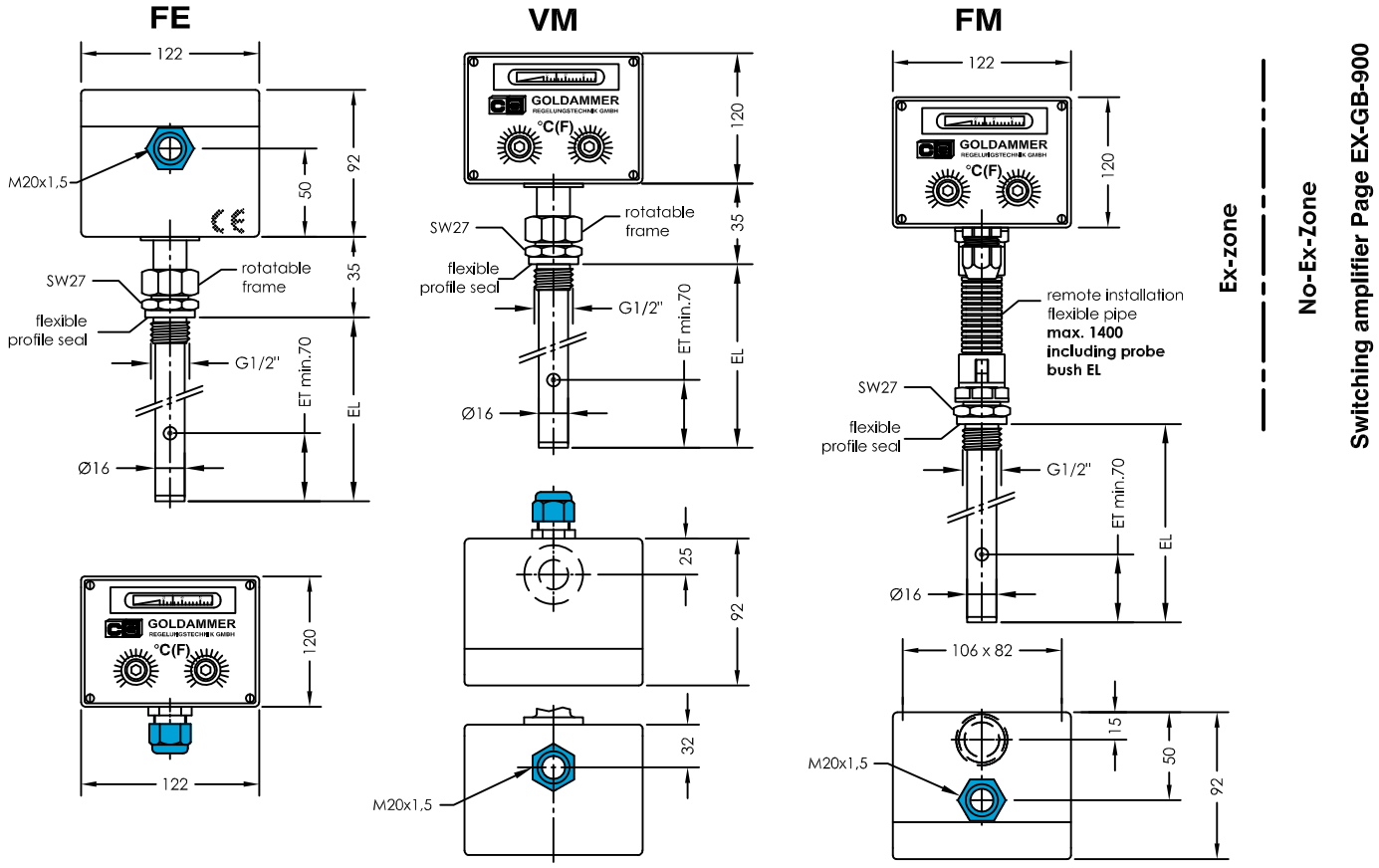

Specimen order

TR 12 - EExi - K1 - A - FM - 300 - MS - I - T90Ö

Temperature
K1= 1 contact
K2= 2 contacts

A= indication of actual temperature
O= without display

FE= permanent installation
VM= vertical installation
FM= remote installation

EL= length of immersion tube (mm)

100 (EL100= max.
200 3 functions)
300 max. 1400

MS
VA

I = 0 to 120°C
II = 32 bis 248°F

Pt100
Thermal contact
T10Ö
T40Ö
T50Ö
T60Ö (S) (Ö
T70Ö (S) preferred)
T80Ö (S)
T90Ö

ET= minimum immersion depth in the medium for the probe to archive an exact measurement.

Terminal diagram

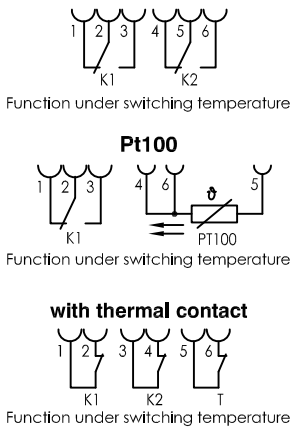

Description

The TR 12 - EExi temperature capillary tube regulator works on the principle of liquid extension. A change of temperature in the probe causes a change in volume. This force operates a potential free changeover contact through a membrane. The desired switching temperatures can be set separately. The range is between 0 and 120 °C (32 to 248°F). On request the devices will be supplied with a display of actual temperature. The probes are located in an immersion tube. The cable connections are made with connection terminal strips of 2,5 mm². This equipment may be used only with the following restriction in group II category 2 (zones 1 and 21) category 3 (zones 2 and 22) temperatureclass IIB-T6. Under difficult operating conditions FM (remote erection) is to be used and the housing is to be supported on rubber-metal connections.

The device has to be installed by specialists only.

Fixed contact as safety switching point

Technical data

Switch cabinet	Polyester
Protection class	IP 65
electric. connection	Connection terminal strip 2,5 mm². (For connection to certified intrinsically safe circuits in type of protection EExi only, DIN EN 60079-11)
Probe bush	Brass (MS) , Stainless steel
Operating pressure	16 bar max.
Ambient temperature	-40 to +80°C
Temperature display	0 to 120°C ±3%
Temperature relay	Changeover / break contact
Temperature range	0 to 120°C, (32 to 248°F),
Switching accuracy	±5k
Switching difference	5k±1k
Thermal elements	Pt100, thermal contact
Mounting position	vertical ± 30°

GOLDAMMER
REGELUNGSTECHNIK GMBH
SCHÖLLERSHEIDER STR. 15 PHONE (49) 2104/12093
P.O.BOX 10 02 17 FAX (49) 2104/12028
D-40802 METTMANN www.Goldammer-Regelungstechnik.com

TR 15 - K3 / K4 - EExi - Atex

Temperature - Capillary tube - Regulator

serial No. Date
EX - GB - 501a 07/19

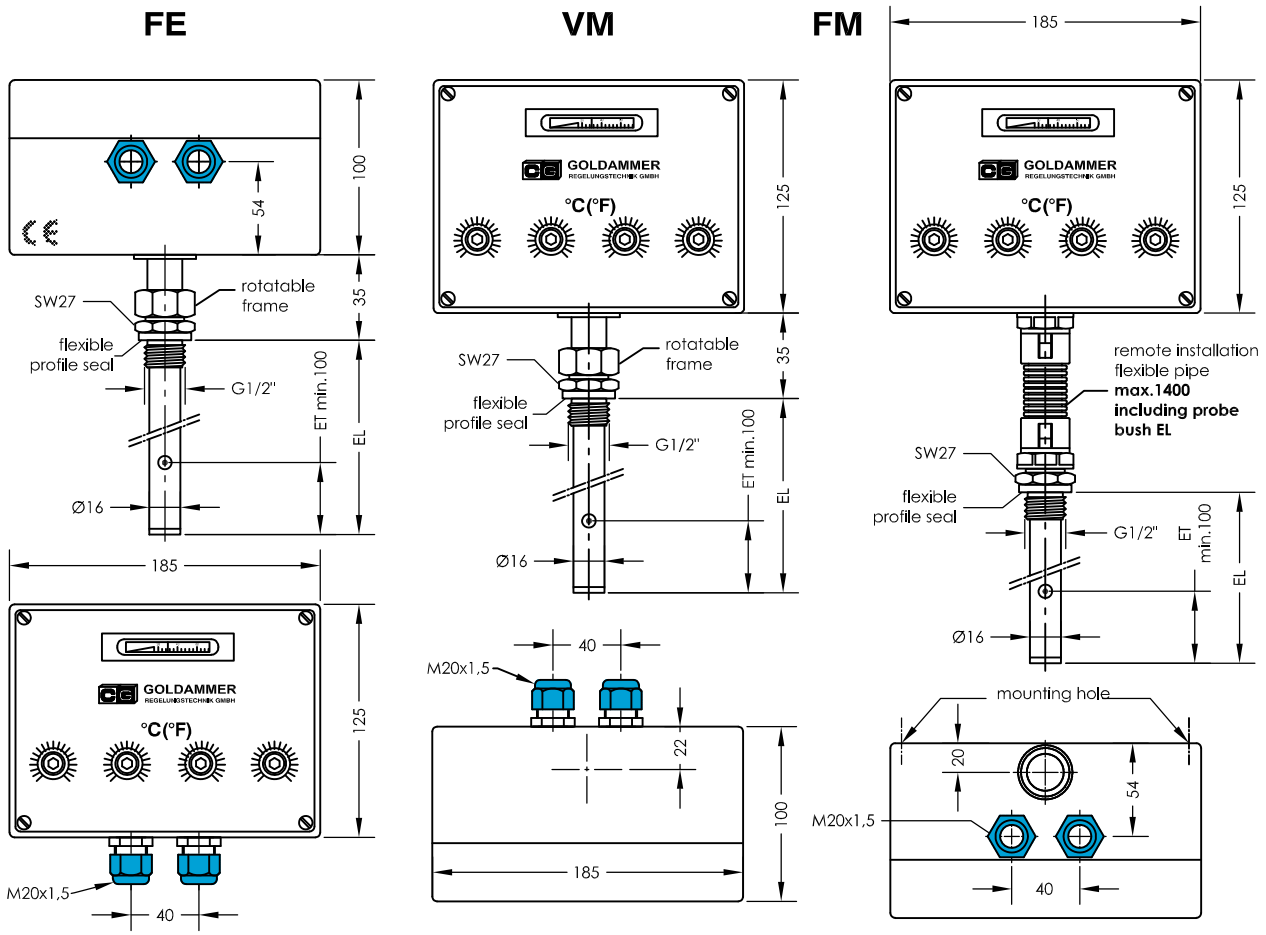

Specimen order

TR 15 - EExi - K3 - A - FM - 400 - MS - III - T90Ö

Order code

Temperature
K3= 3 contacts
K4= 4 contacts

A= indication of actual temperature
O= without display

FE= permanent installation
VM= vertical installation
FM= remote installation

EL= length of immersion tube (mm)
100 200 300 max. 1400
(EL100= max. 3 functions)

MS
VA

II = 32 to 248°F
III = -10 to 80°C

Pt100
Thermal contact
T10Ö
T40Ö
T50Ö
T60Ö (S)
T70Ö (S)
T80Ö (S)
T90Ö
(Ö preferred)

ET= minimum immersion depth in the medium for the probe to archive an exact measurement.

Terminal diagram

Terminal diagram

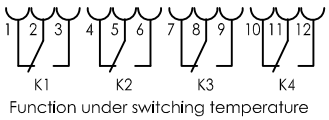

with thermal contact

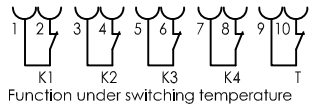

Technical data

Description

The TR 15 - K3 / K4 - EExi temperature capillary tube regulator works on the principle of liquid extension. A change of temperature in the probe causes a change in volume. This force operates a potential free changeover contact through a membrane. The desired switching temperatures can be set separatly. The range is between 0 and 120 °C (32 to 248°F). On request the devices will be supplied with a display of actual temperature. The probes are located in an immersion tube.The cable connections are made with connection terminal strips of 2,5 mm². This equipment may be used only with the following restriction in group II category 2 (zones 1 and 21) category 3 (zones 2 and 22) temperatureclass IIB-T6. Under difficult operating conditions FM (remote erection) is to be used and the housing is to be supported on rubber-metal connections.

The device has to be installed by specialists only .

Fixed contact as safety switching point

Technical data

Switch cabinet	Polyester
Protection class	IP 65
electric. connection	Connection terminal strip 2,5 mm². (For connection to certified intrinsically safe circuits in type of protection EExi only, DIN EN 60079-11)
Probe bush	Brass (MS) , Stainless stell (VA)
Operating pressure	16 bar max.
Ambient temperature	-40 to 80°C
Temperature display	0 to 120°C ±3%
Temperature relay	Changeover contact
Temperature range	-10 to 80°C, (32 to 248°F), (-10 to 80°C , EL=max.500mm)
Switching accuracy	±5k
Switching difference	5k±1K

GOLDAMMER
REGELUNGSTECHNIK GMBH
SCHÖLLERSHEIDER STR. 15
P.O.BOX 10 02 17
D-40802 METTMANN
PHONE (49) 2104/12093
FAX (49) 2104/12028
www.Goldammer-Regelungstechnik.com

TR 4 - G ½" - G1" - EExi - Atex

Temperature transducer 4-20 mA

serial No. Date
EX-GB- 505 09/15

PN 16

Plug socket connector
serie M12
(or 3+PE
EN 175301-803-(DIN 43650))

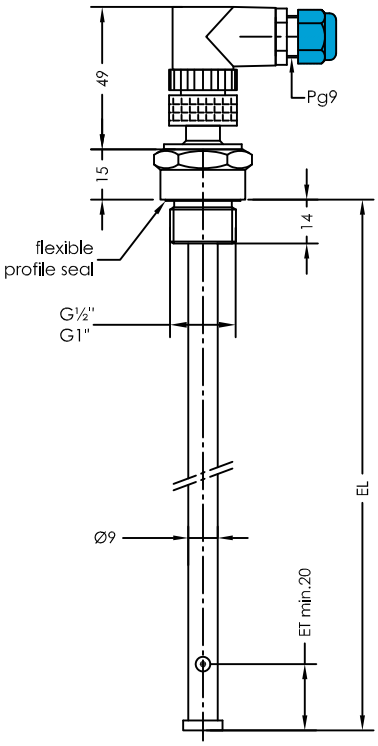

PN250

Plug socket connector
3+PE
EN 175301-803
(DIN 43650)

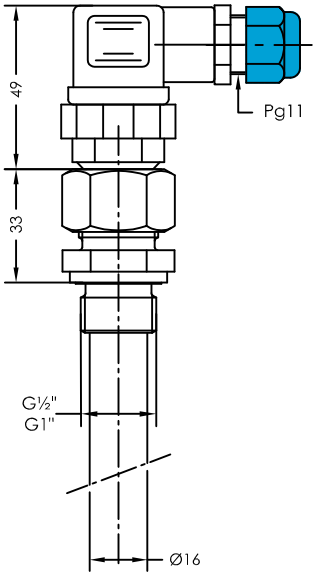

Configuration input

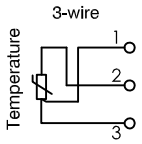

Ex-zone | No-Ex-Zone

Included in scope of delivery:
Transmitter 0/4-20mA - Page EX-GB-902
measuring range configured
Item number 902.546
1-channel temperature

ET= Minimum immersion depth of sensor in medium for precise scanning.

Connector variants

3+PE
EN 175301-803
(DIN 43650)
IP 65

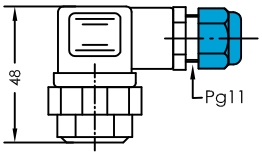

3-wire connection

Serie M12
IP 67

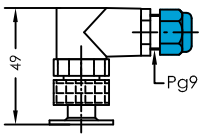

3-/4-wire connection

Order code

Specimen order

TR 4 EExi - G1/2" - PN16 - 200 - M12

Connection thread
G ½
G1"

Operating pressure
PN 16
PN 250

Plug socket connector
3+PE
M12

EL = length of immersion tube (mm)
22
100
200
300
400
500
800
1000

Technical data

Description

The temperature transducer TR 4 - G ½" - G1" - EExi - Atex is used in the area of -50 to +120°C.

The transducer 0/4-20mA is installed in the No-Ex-Zone.

The device has to be installed by specialists only.

Technical data

Measuring tube	**PN 16 / Brass**
	PN 250 / Stainless steel
Connection	**Stainless steel / Brass G½ / G1"**
Plug socket connector	**3+PE - EN 175301-803 (DIN 43650) IP65**
	or serie M12 IP67 only PN 16
Transmitter	**Three-wire,**
	Conection to EExi-transmitter
	Page EX-GB-902
Thermal element	**Pt100**
Measuring range	**0/4-20 mA / 0-100°C**

Other temperature ranges on request

GOLDAMMER
REGELUNGSTECHNIK GMBH

SCHÖLLERSHEIDER STR. 15 **PHONE (49) 2104/12093**
P.O.BOX 10 02 17 **FAX (49) 2104/12028**
D-40802 METTMANN **www.Goldammer-Regelungstechnik.com**

WTR - G1/2" - G1" - EExi - Atex

Resistance thermometer Pt100

serial No. Date
Ex-GB- 506a 09/15

PN 16

Plug socket connector
Serie M12
(or 3+PE
EN 175301-803 (DIN 43650))

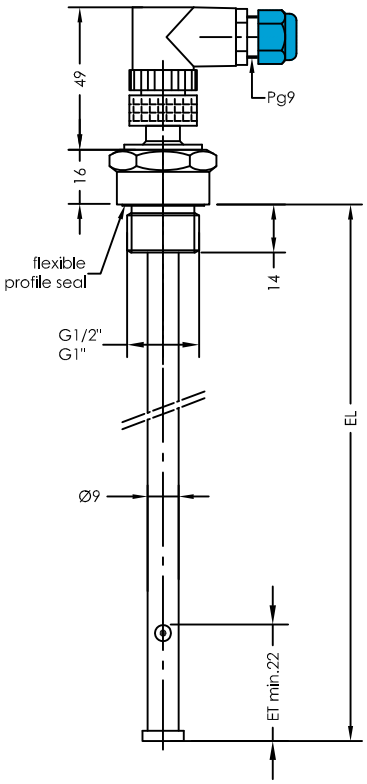

PN250

Plug socket connector
3+PE
EN 175301-803
(DIN 43650)

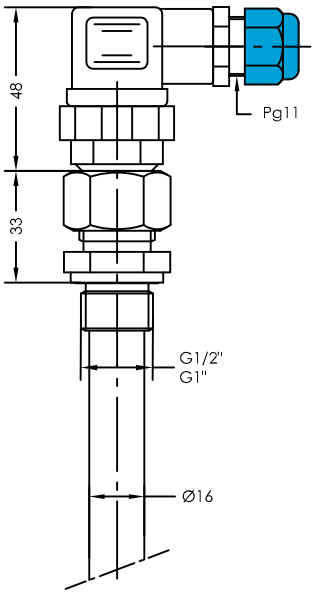

Ex-zone | No-Ex-Zone | Isolator Page EX-GB-901 | Transmitter 4-20mA Page EX-GB-902

ET= Minimum immersion depth of sensor in medium for precise scanning.

Connector variants

3+PE
EN 175301-803
(DIN 43650)
IP 65

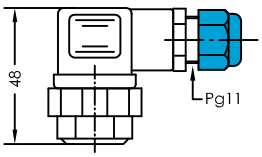

3-wire connection

Serie M12
IP 67

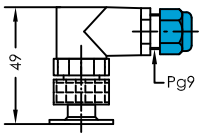

3-/4-wire connection

Order code

Specimen order

WTR EExi - G 1/2" - PN 16 - III - 200 - 3+PE

Connection thread
G 1/2"
G 1"

Operating pressure
PN 16
PN 250

III = three-wire connection
IV = four-wire connection

EL = length of immersion tube (mm)
22
100
200
300
400
500
800
1000

Plug socket connector
3+PE
M12

Technical data

Description

Resistance thermometers are used for direct temperature measurement in the range of -50°C to +120°C .

Standardized basic values enable the resistance thermometer to be used at indicating and control devices without calibration.

With a Pt100, the resistance is 100 Ω ±0,12% at 0°C. The resistance is correspondingly greater at higher temperatures and smaller at lower temperatures.

The device has to be installed by specialists only.

Technical data

Measuring tube	PN 16 / brass PN 250 / stainless steel
Connection	G1/2" / G1"
Plug-socket connector	3+PE - EN 175301-803 (DIN 43650) IP65 or Serie M12 IP67 for connection to certified intrinsically safe circuits in type of protection EExi only, EN 60079-11
Measuring inset	Pt100 with standardized basics to DIN IEC 60751
Temperature range	-50°C to +120°C

Other temperature ranges available on request

GOLDAMMER
REGELUNGSTECHNIK GMBH

SCHÖLLERSHEIDER STR. 15 PHONE (49) 2104/12093
P.O.BOX 10 02 17 FAX (49) 2104/12028
D-40802 METTMANN www.Goldammer-Regelungstechnik.com

WTR - G ½" - F - EExi - Atex

Resistance thermometer Pt100 with spring inside

serial No. Date
EX-GB- 506c 01/15

Execution brass

Plug socket connector Serie M12
(or 3+PE - EN 175301-803
DIN 43650))

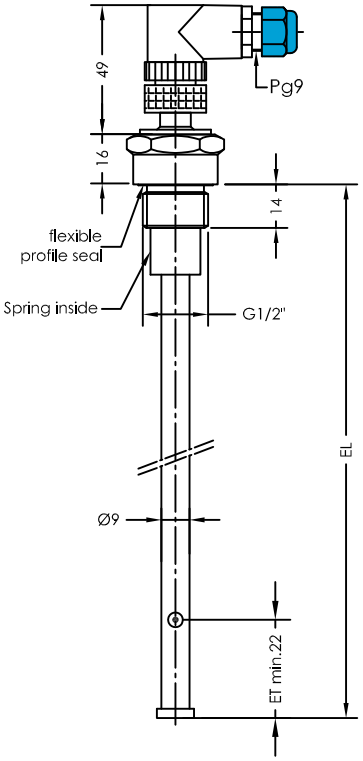

Execution stainless steel

Plug socket connector 3+PE
EN 175301-803 (DIN 43650)
(or Serie M12)

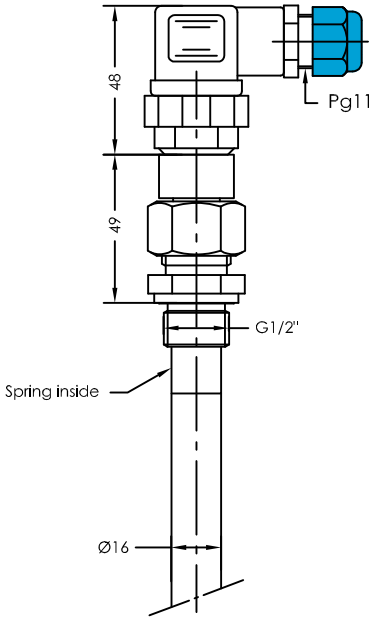

Ex-zone | No-Ex-Zone | Isolator Page EX-GB-901 | Transmitter 4-20mA Page EX-GB-902

ET= Minimum immersion depth of sensor in medium for precise scanning.

Connector variants

3+PE
EN 175301-803
(DIN 43650)
IP 65

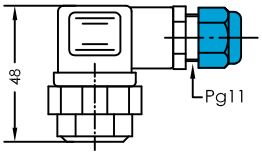

3-wire connection

Serie M12
IP 67

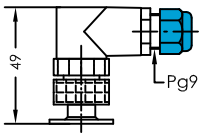

3-/4-wire connection

Order code

Specimen order

WTR EExi - G 1/2" - F - MS - III - 200 -3+PE

Connection thread
G 1/2"

Execution
MS = Brass
VA = stainless steel

III = three-wire connection
IV = four-wire connection

EL = length of immersion tube (mm)
22
100
200
300
400
500
800
1000

Plug socket connector
3+PE
M12

Technical data

Description

Resistance thermometers with spring inside are used for direct temperature measurement in the range of -50°C to +120°C .

Standardized basic values enable the resistance thermometer to be used at indicating and control devices without calibration.

With a Pt100, the resistance is 100 Ω ±0,12% at 0°C. The resistance is correspondingly greater at higher temperatures and smaller at lower temperatures.

The device must only be installed by specialists.

Technical data

Measuring tube	Brass / stainless steel
Connection thread	VA / Brass G1/2" SW27
Operating pressure	1bar
Range of spring	10mm
System pressure	25Nm
Plug-socket connector	DIN 43650 3+PE IP65 or Serie M12 IP67 For connection to certified intrinsically safe circuits in type of protection EExi only, EN 60079-11
Measuring inset	Pt100 with standardized basics to DIN IEC 60751
Temperature range	-50°C to +120°C

Other temperature ranges available on request

GOLDAMMER
REGELUNGSTECHNIK GMBH

SCHÖLLERSHEIDER STR. 15 PHONE (49) 2104/12093
P.O.BOX 10 02 17 FAX (49) 2104/12028
D-40802 METTMANN www.Goldammer-Regelungstechnik.com

TRW - G ... - EExi -Atex

Temperature monitor

serial No. Date
EX-GB- 508 09/15

PN16

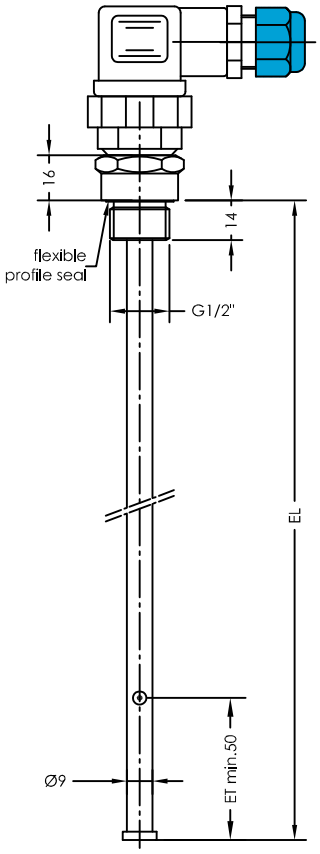

PN250

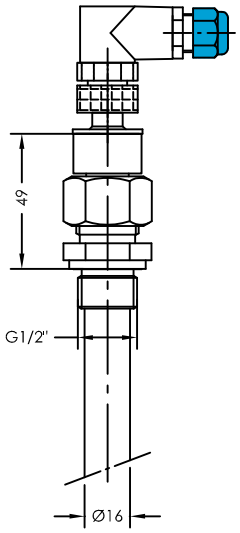

Ex-zone | No-Ex-Zone | Switching amplifier Page EX-GB-900

ET = Minimum immersion depth of sensor in medium for precise scanning.

Order code

Specimen order

TRW EExi-G1/2"-PN16-T70Ö-200-3+PE

Connection
G 1/2"

Operating pressure
PN 16
PN 250

Thermal contact
T10Ö
T40Ö
T50Ö
T60Ö (S) (Ö preferred)
T70Ö (S)
T80Ö (S)
T90Ö
(Indicate T1... - T2... for two thermal contacts)
other temperature available on request
Function with increasing temperature

EL = length of immersion tube (mm)
100
200
300
400
500
800
1000

Plug socket connector
3+PE
M12
HAN I
HAN II

Connector variants

3+PE
EN 175301-803
(DIN 43650)
IP 65

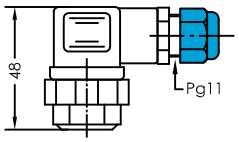

1 function max.

Serie M12
24Vmax.
IP 67

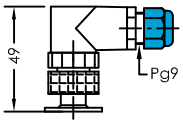

2 functions max.

HAN I
IP 65

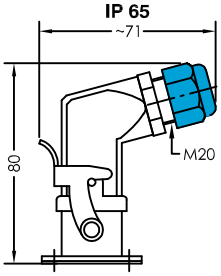

4 function max.

HAN II
IP 65

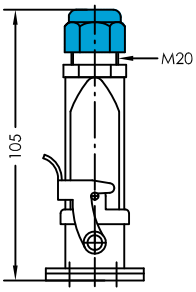

4 function max.

Technical data

Description

Temperature monitors are used for monitoring temperatures in tanks and pipelines.

The permanently adjusted bimetal contact opens or closes with a rise of temperature and automatically returns to the normal contact position with a change of temperature.

The device must only be installed by specialists.

Technical data

Measuring tube	PN 16 / brass PN 250 / stainless steel
Connection	Brass G1/2" SW27
Plug-socket connector	DIN 43650 3+PE IP65
Operating voltage	or serie M12 IP67 for connection to certified intrinsically safe circuits in type of protection EExi only, EN 60079-11
Measuring inset	Thermal contact (bimetal)
Switching accuracy	±3k
Switching difference	1k
Ambient temperature	-40°C to +100°C

GOLDAMMER
REGELUNGSTECHNIK GMBH
SCHÖLLERSHEIDER STR. 15 PHONE (49) 2104/12093
P.O.BOX 10 02 17 FAX (49) 2104/12028
D-40802 METTMANN www.Goldammer-Regelungstechnik.com

TRW - G ... - F - EExi - Atex

Temperature monitor with spring inside

serial No. Date
EX-GB- 508a 09/15

Execution brass

Plug socket connector 3+PE
EN 175301-803 (DIN 43650)
(or Serie M12)

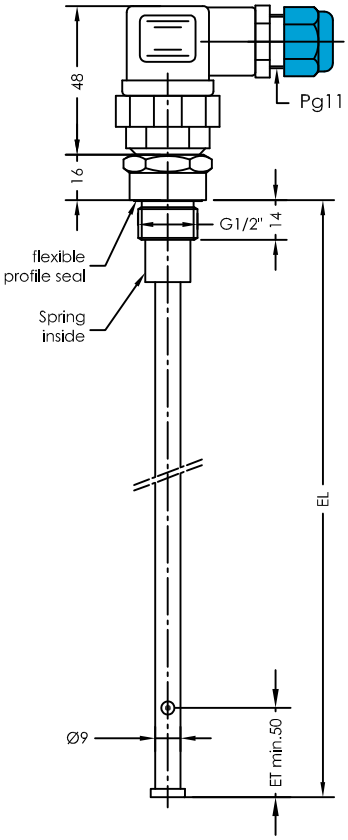

Execution stainless steel

Plug socket connector
Serie M12
(or 3+PE - EN 175301-803
(DIN 43650))

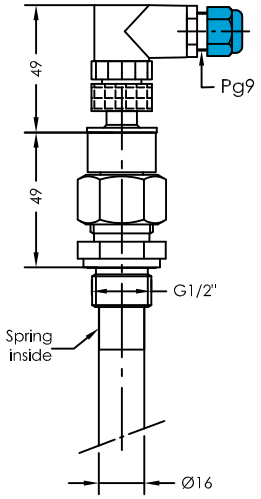

Ex-zone | No-Ex-Zone | Switching amplifier Page EX-GB-900

ET= Minimum immersion depth of sensor in medium for precise scanning.

Connector variants

3+PE
EN 175301-803
(DIN 43650)
IP 65

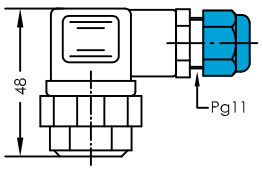

1 function max.

Serie M12
IP 67

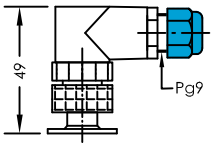

2 functions max.

Order code

Specimen order

TRW EExi-G1/2"-F-MS-T70Ö-200-3+PE

Connection
G 1/2"

Operating pressure
MS = brass
VA = stainless steel

Thermal contact
T10Ö
T40Ö
T50Ö
T60Ö (S)
T70Ö (S) (Ö preferred)
T80Ö (S)
T90Ö
other temperature available on request
Function with increasing temperature

Plug socket connector 3+PE M12

EL = length of immersion tube (mm)
100
200
300
400
500
800
1000

Technical data

Description

Temperature monitors with spring inside are used for monitoring temperatures in tanks and pipelines.

The permanently adjusted bimetal contact opens or closes with a rise of temperature and automatically returns to the normal contact position with a change of temperature.

The device must only be installed by specialists.

Technical data

Measuring tube	Brass / stainless steel
Operating pressure	1bar
Range of spring	10mm
System pressure	25Nm
Connection thread	Brass G1/2" SW27
electrical connections	for connection to certified intrinsically safe circuits in type of protection EExi only, EN 60079-11
Measuring inset	Thermal contact (bimetal)
Switching accuracy	±3k
Switching difference	1k
Ambient temperature	-40°C to +100°C

GOLDAMMER
REGELUNGSTECHNIK GMBH
SCHÖLLERSHEIDER STR. 15 PHONE (49) 2104/12093
P.O.BOX 10 02 17 FAX (49) 2104/12028
D-40802 METTMANN www.Goldammer-Regelungstechnik.com

WM 2 - G - EExi - Atex

Water indicator

serial No. Date
EX-GB- 705 09/15

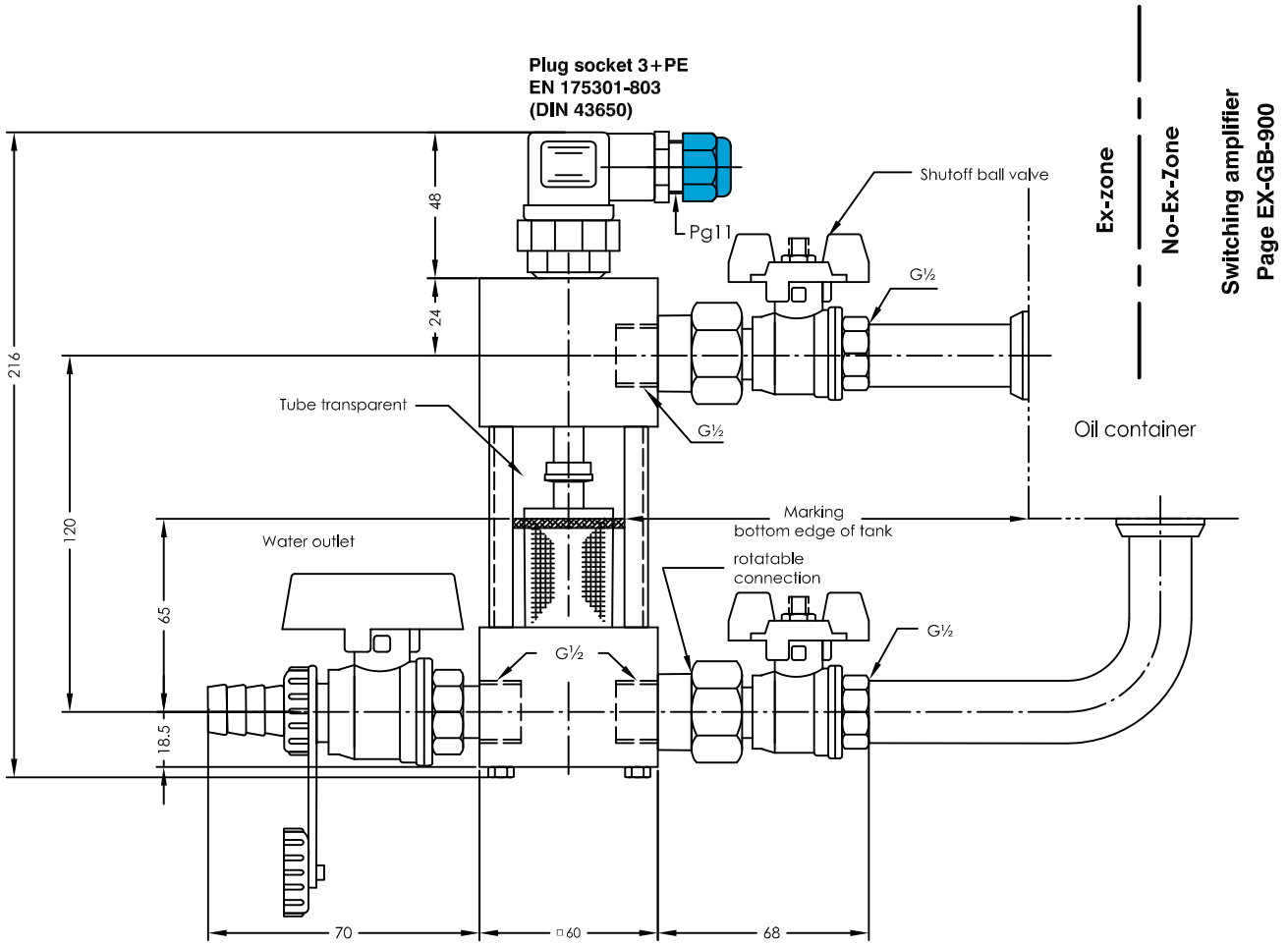

Order code

Specimen order

WM 2 - G - EExi - 0 - KU - W

0= G ½ connection

KU= shutoff ball valve, mounted

Switching point
S= make
W= changeover

Pin Assignment

Plug securing

Technical data

Description

The water indicator is used for the control and regulation of all kinds of liquids and is primarily employed in hydraulic and lubrication oil appliances. This appliance functions according to the principle of separating layer measurement. When the water in the water indicator reaches a level of 30 ml the separating float starts floating and switching a contact (alternatively make or changeover contact).

A visual control through the transparent tube is also possible.

When mounting on the oil container take notice of the marking.

The device has to be installed by specialists only.

Technical data

Operating temperature	80°C max.
Operating pressure	6 bar max.
Level contact	Make / changeover
Electr. connection	for connection to certified intrinsically safe circuits in type of protection EExi only, EN 60079-11
Connection	Aluminium
Shutoff valve	Brass
Mounting position	vertical ± 30°

GOLDAMMER
REGELUNGSTECHNIK GMBH

SCHÖLLERSHEIDER STR. 15 PHONE (49) 2104/12093
P.O.BOX 10 02 17 FAX (49) 2104/12028
D-40802 METTMANN www.Goldammer-Regelungstechnik.com

Switching Repeater

Switching Repeater Field Circuit Ex i / I.S.

serial No. Date
EX-GB- 900 09/15

Features

- Intrinsically safe input [Ex ia] IIC
- Galvanic isolation between input, output and power supply
- Open-circuit / short-circuit monitoring and messaging (can be switched off)
- Inversion of output signal can be set
- Transmission frequency up to 10 kHz
- For use up to SIL 2 (relay - output)
- Optionally SIL 3 (electronic - output) (IEC 61508)

Basic function: binnary / digital input, 1and 2 channels. The switching repeaters are suitable typically for intrinsically safe operation of contacts, proximity switches to EN 60947-5-6 (NAMUR), optocoupler outputs etc.
The output of the switching repeater behaves acc. to EN 60947-5-6 (NAMUR).

Connection diagram

1 channel, 1 changeover- 24V DC

Item No.: 900.312

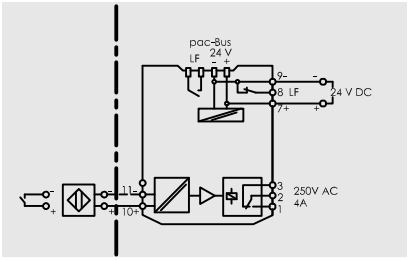

2 channels, 2 changeovers- 24V DC

Item No.: 900.293

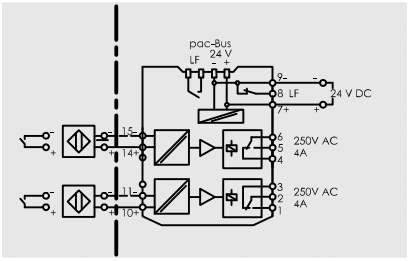

1 channel, 1 changeover- 230V AC

Item No.: 900.321

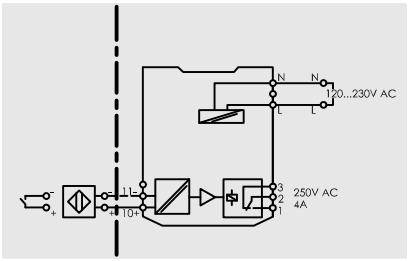

2 channels, 2 changeovers - 230V AC

Item No.: 900.306

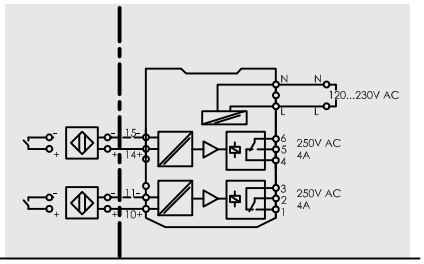

Dimension drawing

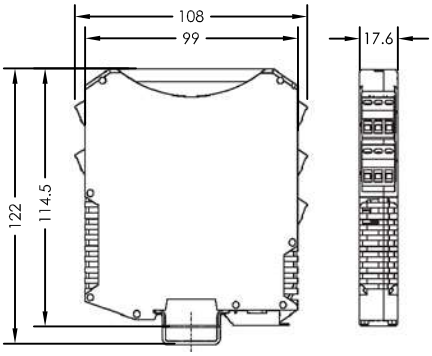

Mechanical data

Weight	approx. 160 g
Assembly	on DIN rail (NS35/15, NS35/7.5) or in pac-Carrier
Installation position	horizontal or vertical
Enclosure	IP30
Terminals	IP20
Enclosure material	PA 6.6
Fire protection class (UL-94)	V0

Connection

Connection single-wire	
- rigid	0,2 ... 2,5 mm²
- flexible	0,2 ... 2,5 mm²
- flexible, end covering sleeves (without / with plastic sleeving)	0,25 ... 2,5 mm²
Connection two wires	
- rigid	0,2 ... 1 mm²
- flexible	0,2 ... 1,5 mm²
- flexible, end covering sleeves	0,25 ... 1 mm²

Explosion Protection

	24V DC	230V AC
Global (IECEx)		
Gas	IECEx BVS 09.0041X [Ex ia] IIC, [Ex ia] IIIC	[Ex ia] IIC, [Ex ia] IIIC
Europe (ATEX)		
Gas and dust	DMT 02 ATEX E 195 X E II (1) G [Ex ia] IIC E II (1) G [Ex ia] IIC	DMT 02 ATEX E 195 X E II (1) D [Ex ia] IIIC E II (1) D [Ex ia] IIIC
USA (NEC)		
Gas and dust	3017145 (FM) CL. I, DIV. 2, GP. A,B,C,D CL. I, ZONE 2, GP. IIC AIS CL. I, II, III, DIV. 1, GP. A,B,C,D,E,F,G CL. I ZONE 0 [AEx ia] IIC, T4 at Ta = 70 °C E81680 (UL) CL I, GR A-G CL II, GR EFG CL III, Ta = 70 °C	3017145 (FM) AIS CL. I, II, III, DIV. 1, GP. A,B,C,D,E,F,G CL. I, ZONE 0 [AEx ia] IIC, T4 at Ta = 70 °C E81680 (UL) CL I, GR A-G CL II, GR EFG CL III, Ta = 70 °C
Russia (Gost-R)		
Gas	[Exia]IIC [Exia]IIC [ExiaD] [ExiaD]	
Certificates and approvals		
Certificates	IECEx, ATEX, Brazil (INMETRO), India (PESO), Canada (CSA), Kazakhstan (JSC), Korea (KTL) only for 9170/10-12-21., Russia (GOST-R), Serbia (SRPS), USA (FM, UL), Belarus (GOST-B)	IECEx, ATEX, Brazil (INMETRO), India (PESO), Canada (CSA), Kazakhstan (JSC), Korea (KTL) only for 9170/10-12-21., Russia (GOST-R), Serbie (SRPS), USA (FM, UL), Belarus (GOST-B)
Other approvals	ship approval (DNV)	ship approval (DNV)

GOLDAMMER
REGELUNGSTECHNIK GMBH
SCHÖLLERSHEIDER STR. 15 PHONE (49) 2104/12093
P.O.BOX 10 02 17 FAX (49) 2104/12028
D-40802 METTMANN www.Goldammer-Regelungstechnik.com

Isolators

Ex Resistance Isolator for Pt 100

serial No. Date
EX-GB- 901 09/15

Features

- Space saving, only 8.8 mm per channel
- For 3- and 4-wire circuits
- Intrinsically safe input [EEx ia] IIC
- Galvanic isolation between input, output and power supply
- 1 channel
- Installation possible in Zone 2
- Optionally 2 channel-version

Basic function: analog input, Ohm, 1 channel.
The resistance isolators are used for intrinsically safe operation of Pt 100 resistance thermometer or other resistance sensors.
The measured value is transferred to the output

Mechanical data

Weight	approx. 160 g
Mounting type	on DIN rail acc. to EN 50022 (NS35/15; NS35/7.5) or in pac-Carrier
Mounting position	horizontal or vertical
Casing protection class	IP 30
Terminal protection class	IP 20
Casing material	PA 6.6
Fire protecting class (UL-94)	V0

Dimension drawing

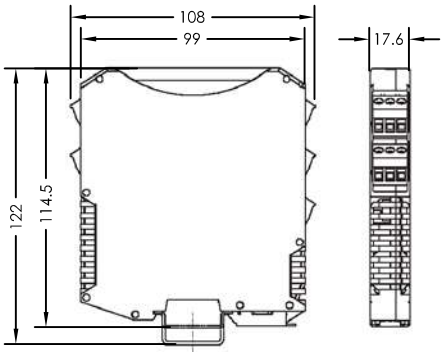

Connection

Connection single-wire

- rigid	0,2 ... 2,5 mm²
- flexible	0,2 ... 2,5 mm²
- flexible, end covering sleeves (without / with plastic sleeving)	0,25 ... 2,5 mm²

Connection two wires

- rigid	0,2 ... 1 mm²
- flexible	0,2 ... 1,5 mm²
- flexible, end covering sleeves	0,25 ... 1 mm²

Connection diagram

1 channel - 24V DC

Item No.: 901.491

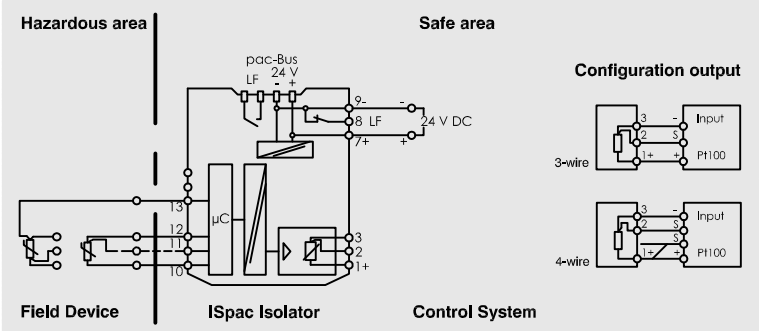

Technical data

Certificates	BVS 05 ATEX E 176 X
Explosion protection	Ex II (1) GD [EEx ia] IIC/IIB and Ex II 3 G EEx nAC T4
Installation	in Zone 2, Div. 2 and in the safe area

Safe maximum values (CENELEC)

Max. voltage U_o	6,5 V
Max. current I_o	16,4 mA
Max. power P_o	27 mW (linear characteristic)
Max. capacitance C_o for IIC/IIB	25 µF / 570 µF
Max. inductance L_o for IIC/IIB	120 mH / 450 mH
Internal capacitance C_i and inductance Li	negligible
Insulation voltage U_m	250 V

Further information and combinations of values, see certification.

GOLDAMMER
REGELUNGSTECHNIK GMBH
SCHÖLLERSHEIDER STR. 15 PHONE (49) 2104/12093
P.O.BOX 10 02 17 FAX (49) 2104/12028
D-40802 METTMANN www.Goldammer-Regelungstechnik.com

Transmitter

Transmitter Field Circuit Ex i
Output 0/4-20mA

serial No. Date
EX-GB- 902 05/16

Features

- One unit for nearly all temperature sensors indivdually configurable
- Intrinsically safe input [Ex ia] IIC
- Signal duplication possible
- Galvanic isolation between input, output, power supply and configuration interface
- Open-circuit and short-circuit monitoring and messaging (can be switched off)
- Simple configuration with PC or DIP-switches
- Versions can be used up to SIL 2 (IEC 61508)

Basic function: temperature input, O, 1 and 2 channels. The temperature transmitter is used for intrinsically safe operation of temperature sensors. Most currently available sensors can be connected, such as Pt 100, Pt 500, Pt 1000, Ni 100, thermocouples and resistance transmitters. The parameters can be set using parameterising software ISpac Wizard or alternative via DIP-switches.
Output signal 0/4-20mA.

Mechanical data

Weight	approx. 160
Mounting type	on top hat rail (NS35/15, NS35/7.5) or in pac-Carrier
Mounting orientation	horizontal or vertical
Degree of protection	
Enclosure	IP30
Terminals	IP20
Enclosure material	PA 6.6
Fire resistance (UL-94)	V0

Dimension drawing

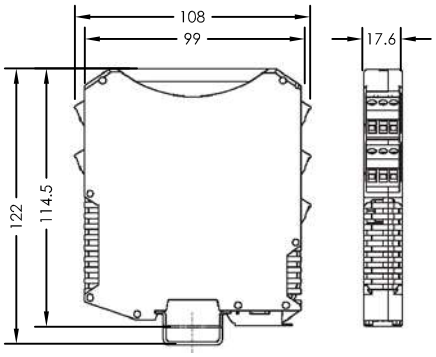

Connection

Connection single-wire	
- rigid	0,2 ... 2,5 mm²
- flexible	0,2 ... 2,5 mm²
- flexible with core end sleeves (without / with plastic sleeve)	0,25 ... 2,5 mm²
Connection two wires	
- rigid	0,2 ... 1 mm²
- flexible	0,2 ... 1,5 mm²
- flexible with core end sleeves	0,25 ... 1 mm²

The total resistance field devices / connecting lines to transmitter is max. 200Ω

Item No.: 902.546

Connection diagram
1 channel - 24V DC

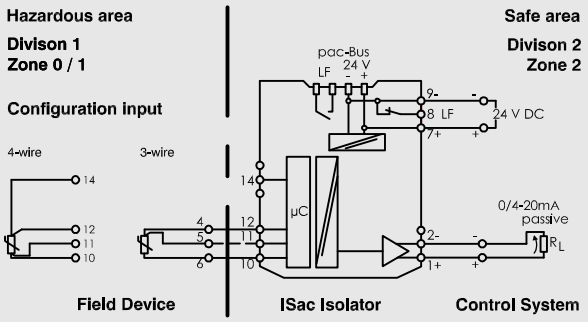

Item No.: 902.541

Connection diagram
2 channel - 24V DC

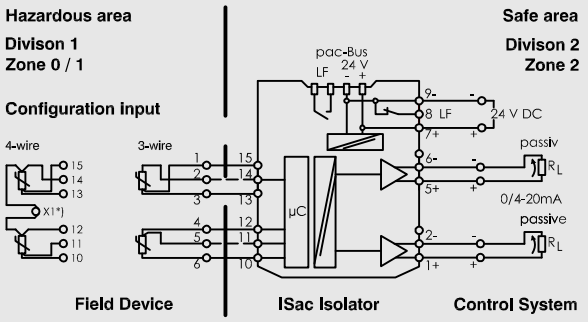

Explosion Protection

Global (IECEx)	
Gas	IECEx BVS 09.0046X Ex nAc nCc [ia] IIC T4 [Ex ia] IIIC
Europe (ATEX)	
Gas and dust	DMT 02 ATEX E 243 X Ex II 3 (1) G Ex nAc nCc [ia] IIC T4 Ex II (1) D [Ex ia] IIIC
Certifications and certificates	
Certificates	IECEx, ATEX, Brazil (INMETRO), Canada (CSA), Kazakhstan (GOST K), Korea (KTL) only for 9182/10-51-11, Russia (GOST R), Ukraine (TR), USA (FM, UL), Belarus (operating authorisation)
Ship approval	DNV

GOLDAMMER
REGELUNGSTECHNIK GMBH
SCHÖLLERSHEIDER STR. 15 PHONE (49) 2104/12093
P.O.BOX 10 02 17 FAX (49) 2104/12028
D-40802 METTMANN www.Goldammer-Regelungstechnik.com

Explosionsschutz und Eigensicherheit
Explosion protection and intrinsic safety

Nachweis der Eigensicherheit für eigensichere Stromkreise mit nur einem, zugehörigen Betriebsmittel (einfacher Nachweis)
Proof of intrinsic safety for intrinsically safe circuits with only one associated apparatus (easier detection)

Für Niveauregler der Baureihe NR..EExi in Kombination mit Niveaukontakten Typ 01, 02, 03, 04 und Thermokontakten Typ T..Ö, T..S gilt für folgende Bauteile die zu erwartende Lebensdauer:

For level regulator of the production series NR ..EExi in combination with level contacts type 01, 02, 03, 04 and thermal contacts type T..Ö, T..S applies to the following parts the expected life span:

Niveaukontakte Typ 01, 02, 03, 04
Level contacts type 01, 02, 03, 04

Die Lebensdauer der Niveaukontakte beträgt bei maximaler Belastung $10^5 \ldots 10^6$ Schaltspiele. Die mechanische Lebensdauererwartung beträgt mindestens 10^9 Schaltspiele. Beim Schalten von Induktiv-, Kapazitiv- und Lampenlasten kann sich die Lebensdauer infolge Überschreitens der zulässigen Einschaltströme oder Schaltspannungen erheblich reduzieren.

The life span of the level contacts amounts by maximum charging $10^5 \ldots 10^6$ switching charges. The mechanical life span amounts at least 10^9 switching charges. During the switching of inductive load, capacitive load and lamp load the life span can be significantly reduced because of exceeding from the permissible starting current or switching voltage.

Technische Daten Kontakttyp 01/03
Ui: Max. Schaltspannung 230 VAC/VDC
Ii: Max. Schaltstrom 0,5 A
Pi: Max. Schaltleistung 10 W/VA
Ci: Kapazität der geöffneten Kontakte 0,5 pF
Li: vernachlässigbar

Technical Data contact type 01/03
Ui: Max. switching voltage 230 VAC/VDC
Ii: Max switching current 0,5A
Pi: Max. switching capacity 10 W/VA
Ci: Capacitance (open contacts) 0,5pF
Li: negligible

Technische Daten Kontakttyp 02/04
Ui: Max. Schaltspannung 250 VAC/VDC
Ii: Max. Schaltstrom 1 A
Pi: Max. Schaltleistung 60 W/VA
Ci: Kapazität der geöffneten Kontakte 1,0 pF
Li: vernachlässigbar

Technical Data contact type 02/04
Ui: Max. switching voltage 250 VAC/VDC
Ii: Max switching current 1A
Pi: Max. switching capacity 60 W/VA
Ci: Capacitance (open contacts) 1,0 pF
Li: negligible

Technische Daten Thermokontakt T..Ö, T..S
schleichend schaltender Kontakt ohne Hysterese
Schaltleistung:
Ui: 24V
Ii: 4A
Pi: 48W
Ci: 6,5pF bei geöffnetem Kontakt
Li: vernachlässigbar

Technical Data thermal contact T..Ö, T..S
Creep action, no differential
Contact rating:
Ui: 24V
Ii: 4A
Pi: 48W
Ci: 6,5pF for open contact
Li: negligible

Technische Daten Pt100
Empfohlener Messstrom 1,0mA
Maximaler Strom 7,0mA
Eigenerwärmungskoeffzient E in °C/mW in Luft 0,2

Technical Data Pt100
Measuring current 1,0mA
Maximum current 7,0mA
Self-heating coefficient E in °C/mW in air 0,2

Terms and conditions of sale and delivery

1. **General**
All sales, deliveries and offers are made solely on the basis of the following terms of trade. By accepting an offer or by issuing an order, the purchaser agrees to the complete content of our terms of trade. The purchaser's conditions in deviation to these terms oblige us in no manner whatsoever, even if we do not expressly contradict such. Contrary conditions to or deviations from our terms of trade do not become effective unless confirmed by us in writing. Auxiliary, verbal agreements are non-binding. Until some other agreement is made, these terms of trade apply to all business transactions at present and in the future, even if individual orders do not make particular reference to our terms in the course of our business relationship.

2. **Offers**
Our offers are always non-binding and subject to alteration.

3. **Orders**
Orders are not regarded as accepted until we confirm such in writing; this confirmation of order alone is definitive for our delivery obligations. If a delivery is made without prior confirmation, the content of the invoice is the equivalent to a confirmation of order.

4. **Prices**
All prices are subject to alteration. They do not include packaging, are purely net from the place of dispatch, given availability, and are carriage forward, on the proviso that the costs of materials, wages, freight and packaging remain the same. The costs of dead freights – insofar as these are caused by the buyer – are borne by the buyer. In case orders are cancelled or rescinded, the costs, expenses and work incurred up to that date – if unable to be used elsewhere – are borne by the purchaser.

5. **Delivery**
The agreement of a delivery period remains reserved for every order. Delivery deadlines do not start to run until all the necessary documents have been received from the purchaser, until all the necessary approvals have been obtained and until all other obstacles to delivery have been overcame. If it is not possible to ship the goods through no fault of our own, the delivery date is regarded as having been met if readiness to dispatch is notified on time. An obligation to observe agreed delivery dates cannot be accepted unless the course of production remains undisturbed. The consequences of an Act of God, operational breakdowns, sovereign acts, a lack of raw and auxiliary materials at the time of manufacture and other unforeseen circumstances suffered by ourselves or our suppliers entitle us to annul the delivery obligations in full or in part. Non-compliance with confirmed delivery deadlines gives no right to pursue claims for damages or to cancel the order. We are entitled, although not obliged, to deliver the missing quantities of goods at a later date. Claims for damages due to non-fulfilment or late fulfilment are excluded.

6. **Transfer of risk**
Risk is transferred to the purchaser as soon as the goods leave our works or upon handover to a carrier or supplier on our premises. We select the method of transport and the type of packaging at our discretion. In case the purchaser is in default of acceptance, risk is transferred to the purchaser upon notification of readiness to dispatch or readiness for collection.

7. **Complaints**
Complaints cannot be accepted unless these are reported to us in writing within 1 week of receipt of the goods. Concealed defects and complaints can no longer be pursued after the warranty period has expired.

8. **Warranty obligation**
Our warranty obligation is restricted to the duty of replacing defective parts, insofar as this is possible, with faultless parts at no charge. Parts that have been replaced become our property. If it is not financially viable to replace defective parts from an objective viewpoint, or if this would entail unreasonable expenditure compared to the value of the order, the purchaser has the right to demand a reduction in price. For the rest, claims for damages of whatever nature due to a faulty delivery are excluded, in particular compensation for foregone profit, consequential damages and rights of diminution, conversion, rescission or withdrawal. The warranty period is 12 months from the date of delivery. Liability for defects does not include normal wear and tear, incorrect operation, unsuitable operating materials and arbitrary changes to the goods made by the buyer or other defects in the goods for which we are not responsible. The supplier's warranty terms apply to bought-in goods.

9. **Reservation of title**
Ownership is not transferred to the buyer until it has fulfilled all its obligations under the purchase contract in question. Bills of exchange and cheques are only accepted to facilitate payment. Payment by cheque with the simultaneous justification of a financing relationship by means of bill of exchange is not regarded as settlement of the purchase price. If the goods delivered or parts thereof are assembled in another object, the reservation of title does not expire; co-ownership in accordance with the percentage value of the goods in the new object is rather agreed instead. Even if the buyer cites a certain claim as the subject of redemption upon making a payment, the payment is nevertheless offset against the oldest debt. The buyer is entitled to process or resell the reserved goods in regular business transactions. In contrast, the buyer may not pledge or assign the goods. For the purpose of security in case the goods are resold or reprocessed, the buyer now assigns all claims from the resale along with all other rights it accrues against the third party debtor to us, up to the amount of our invoice sum, and authorises us to collect the proportionate part of the claim. If the buyer collects the assigned claim itself, this is only done on trust. The revenue collected on our behalf must be remitted to us without delay. At our request, the buyer is obliged to notify the assignments to the second buyer and provide us with the information required to pursue our rights against the second buyer. The buyer must inform us without delay if the goods are seized or in case our rights are impaired by third party action in any other way. If the second buyer does not pay immediately in cash, the buyer shall reserve the extended ownership for us.

10. **Conditions of payment**
Payments are due without charges for us within 10 days from the invoice date at 2% discount or within 30 days purely net. In case of default of payment, default interest is payable on the debt at 1% per month. If the payment deadline is exceeded by 30 days, the debtor is in default without requiring any further reminder. Our minimum order value is EUR 50. If this sum is not reached, the quantity of goods supplied will be increased until this value is reached. Discounts agreed take effect from an order value of EUR 50. Invoices for repair work performed by the seller are payable immediately without deductions. Bills of exchange are accepted only after special agreement. Cheques are not regarded as payments until the date that their monetary value can be disposed over. On the proviso of separate agreements, deliveries outside Germany are made cash against documents. The buyer has no right of offsetting or retention, unless the seller has recognised such claims in writing or these have been established by a court of law.

11. **Documents**
Drawings, documents, drafts and cost estimates remain our property. Unless we have given our approval, such documents may neither be reproduced nor made available to third parties. If a contract does not come into being, documents sent with offers must be returned to us without delay. The complete content of our web pages is protected by copyright. Content may only be downloaded or printed out if it is used for the intended purpose.

12. **Place of jurisdiction and fulfilment**
The place of fulfilment for payments and deliveries is 40822 Mettmann. The place of jurisdiction for all disputes arising from a contract and for disputes concerning the obligations under a contract is Mettmann.

13. **Miscellaneous**
Even if individual provisions are legally unworkable, the remaining provisions of the purchase or delivery contract and these terms remain binding.

As at: October 2012

GOLDAMMER
REGELUNGSTECHNIK GMBH
SCHÖLLERSHEIDER STR.15
POSTFACH 10 02 17
D-40802 METTMANN
TELEFON 02104/12093
TELEFAX 02104/12028
info@goldammer-regelungstechnik.com

Damaged cargo by carriers

In extremely very rare cases may happen that the shipment is damaged, this can be caused by mishandling the consignment by carriers or other unknown factors.

The shipment damages liability is in the §§ 425 ff of the German Commercial Code regulated, to make use of this regulation, the receiver of the damaged shipment must prove that the shipment damage was resulted due to cargo mishandling.

The Shipment damages reliability regulation differentiates between open and covered shipment damages.
Open shipment damage has to be reported immediately after discovery to the supplier.

If the cargo damage or the Package damage is from outside view is visible, the damage must be to the transport carrier immediately on the spot reported and the shipment receivement must be declined.

In case of Concealed damages, the objections deadline is seven days

To avoid disagreements over damages we request you kindly to follow the German Commercial Code regulations deadlines.

As at: 2015

GOLDAMMER
REGELUNGSTECHNIK GMBH
Schöllersheider Str. 15
D-40822 METTMANN
POSTFACH 10 02 17
D-40802 METTMANN
TELEFON 02104/12093
TELEFAX 02104/12028
info@goldammer-regelungstechnik.com
www.goldammer-regelungstechnik.com