Electric Motors

Marine Brake Motors

hoyermotors.com

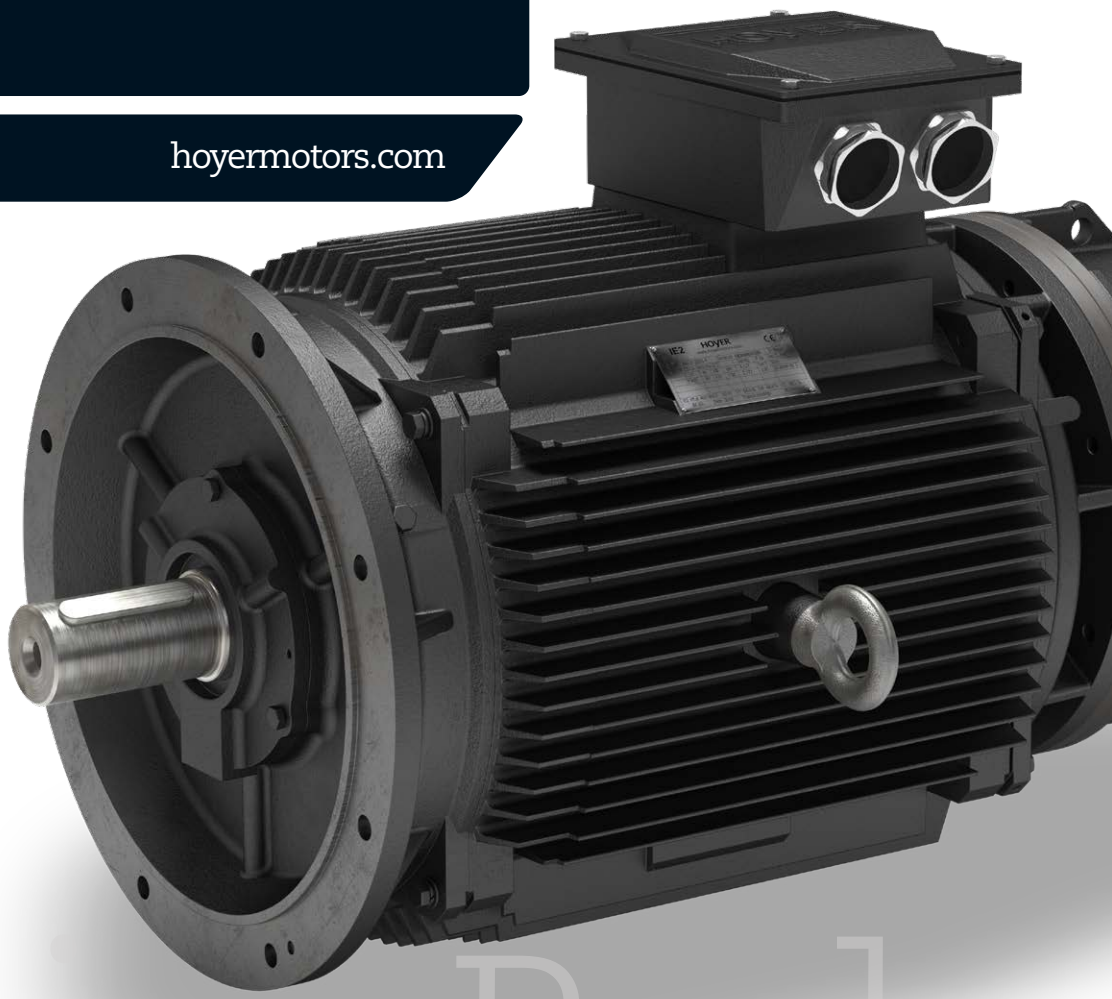

Marine Brake

HOYER
MOTORS

Behind Hoyer Motors

HOYER

EXCEEDING EXPECTATIONS

Hoyer Motors is an international supplier of high-end electric motors. Headquartered in Denmark and China, we are represented through sales offices and distributors worldwide. We pride ourselves of being an elite manufacturing enterprise with the highest attention to service and flexibility – a company where dedication, competitiveness and reliability are second to none.

We have selected focus on the segments Marine, HVAC, Industrial Pumps, Oil & Gas, Wind and HPU. Through strong partnerships with market leading industrial OEM's within these segments, we are able to offer a unique setup and industrial insight. We add value by understanding the business and markets of our customers.

At Hoyer Motors, meeting agreements is as natural as breathing air. We believe in trustworthy partnerships with our customers and always meet our obligations on deliveries, documentation and product quality. This is what we mean by Exceeding Expectations.

Hoyer Marine Brake Motors

General information about Hoyer Marine Brake Motors

The marine brake motor is designed specifically for demanding marine and offshore applications. It offers value-adding flexibility due to a design where key elements such as delivery performance and customised solutions are incorporated.

Perfectly matched components are the foundation of the modular brake motor design. By using Hoyer IE2 Marine motors as the backbone of the design, both quality, documentation and short lead times are ensured. Together with the high protection marine brake from Stromag and a Kübler encoder developed for harsh conditions the Hoyer Marine Brake Motors are ready to meet the highest expectations.

Technical information

The marine brake motors are type HMC2 and always in cast iron size 132-355.

All motors are manufactured according to IEC 60034, IEC60072, EN50347 and tested according to IEC60034-2-1.

Rotor is dynamically balanced with half key, to fullfill vibration level IEC60034-14 grade A.

The motors are asynchronous low voltage three-phase squirrel-cage motors. All motors are equipped with 3xPTC in windings, heating elements for stand still protection against condensation and tropical windings. They are prepared for frequency converter duty and have IP 56 protection class for open deck usage. The range comprise two flexible designs that can be modified according to customer specifications:

- Totally enclosed non-ventilated – IEC 410
- Totally enclosed forced ventilated (Wistro cooling) – IEC 416

For motors with encoder the standard type used is Kubler 8.5020.D55F.1024.0050, Push-Pull with inverter signal, 10-30 V DC, 5 meter PVC cable, Pulse rate 1024.

Application info

Marine brake motors are mostly used for deck equipment and often placed on open deck. Typical customer applications are:

- Capstans
- Anchor winches
- Mooring winches
- Cranes
- LARS

4 pole

Motor type	440V 60Hz S1 - 45°C				Standard brake				Brake motor		Alternative brake**		
	P2	IN	Torque	J	Torque options			J	Weight	J	Torque options		
	kW	A	Nm	kgm²	No-minal	Decreased	Increased	kgm²	kg	kgm²	No-minal	Decreased	Increased
HMC2 BM 132S-4	6,40	11,6	35,0	0,039	63	45/54	69/75/80	0,0012	83	0,0402	100	63/80	130/160
HMC2 BM 132M-4	8,75	15,2	47,5	0,052	100	63/80	130/160	0,0019	108	0,0539	N/A	N/A	N/A
HMC2 BM 160M-4	12,8	21,4	70,0	0,097	160	100/130	200/250	0,0026	165	0,0996	250	160/200	300/350/400
HMC2 BM 160L-4	17,4	28,5	95,0	0,130	160	100/130	200/250	0,0026	175	0,1326	250	160/200	300/350/400
HMC2 BM 160L1-4*	21,6	35,5	116	0,170	250	160/200	300/350/400	0,0050	190	0,1750	160	100/130	200/250
HMC2 BM 180M-4	21,6	36	116	0,200	250	160/200	300/350/400	0,0050	231	0,2050	N/A	N/A	N/A
HMC2 BM 180L-4	25,5	43	138	0,230	250	160/200	300/350/400	0,0050	251	0,2350	N/A	N/A	N/A
HMC2 BM 180L1-4*	35,0	56	188	0,280	250	160/200	300/350/400	0,0050	291	0,2850	N/A	N/A	N/A
HMC2 BM 200L-4	35,0	56,5	190	0,280	250	160/200	300/350/400	0,0050	301	0,2850	400	250/350	490/550/630
HMC2 BM 200L1-4*	43,0	68	232	0,510	400	250/350	490/550/630	0,0133	320	0,5233	630	400/550	720/800/1000
HMC2 BM 225S-4	43,0	68	230	0,550	400	250/350	490/550/630	0,0133	373	0,5633	630	400/550	720/800/1000
HMC2 BM 225M-4	52,5	80,5	280	0,570	400	250/350	490/550/630	0,0133	403	0,5833	630	400/550	720/800/1000
HMC2 BM 225M1-4*	64,0	104	345	0,900	630	400/550	720/800/1000	0,0271	517	0,9271	N/A	N/A	N/A
HMC2 BM 250M-4	64,0	100	345	0,750	630	400/550	720/800/1000	0,0271	522	0,7771	1000	630/800	1300/1600
HMC2 BM 250M1-4*	87,5	136	470	1,040	630	400/550	720/800/1000	0,0271	628	1,0671	1000	630/800	1300/1600
HMC2 BM 280S-4	87,5	134	470	1,550	1000	630/800	1300/1600	0,0366	688	1,5866	N/A	N/A	N/A
HMC2 BM 280M-4	104	158	565	1,950	1000	630/800	1300/1600	0,0366	763	1,9866	N/A	N/A	N/A
HMC2 BM 280MB-4*	128	200	685	2,530	1000	630/800	1300/1600	0,0366	810	2,5666	N/A	N/A	N/A
HMC2 BM 315S-4	128	198	685	2,870	1600	1000/1300	1900/2100/2500	0,0600	1045	2,9300	2500	1600/2000	2800/3400
HMC2 BM 315M-4	154	238	825	3,260	1600	1000/1300	1900/2100/2500	0,0600	1145	3,3200	2500	1600/2000	2800/3400
HMC2 BM 315L1-4	186	290	995	3,710	1600	1000/1300	1900/2100/2500	0,0600	1185	3,7700	2500	1600/2000	2800/3400
HMC2 BM 315L2-4	232	355	1240	4,670	1600	1000/1300	1900/2100/2500	0,0600	1375	4,7300	2500	1600/2000	2800/3400
HMC2 BM 315L3-4	290	440	1560	5,550	2500	1600/2000	2800/3400	0,1266	1460	5,6766	4000	2500	4900
HMC2 BM 355M-4	290	445	1560	7,770	2500	1600/2000	2800/3400	0,1266	1925	7,8966	4000	2500	4900
HMC2 BM 355L-4	365	545	1960	9,350	2500	1600/2000	2800/3400	0,1266	2105	9,4766	4000	2500	4900
HMC2 BM 355L1-4	415	620	2200	12,20	4000	2500	4900	0,2670	2500	12,467	N/A	N/A	N/A

** Motors with high power/small frame*
*** On request*

6 pole

Motor type	440V 60Hz S1 - 45°C			Standard brake			Brake motor		Alternative torque brake**		
	P2	IN	Torque	Torque options			Weight	J	Torque options		
	kW	A	Nm	No-minal	Decreased	Increased	kg	kgm²	No-minal	Decreased	Increased
HMC2 BM 132S-6	3,50	7,20	29,0	63	45/54	69/75/80	76	0,0342	100	63/80	130/160
HMC2 BM 132M1-6	4,65	9,40	39,0	100	63/80	130/160	98	0,0459	N/A	N/A	N/A
HMC2 BM 132M2-6	6,40	13,0	52,5	100	63/80	130/160	108	0,0609	N/A	N/A	N/A
HMC2 BM 160M-6	8,75	16,8	72,0	160	100/130	200/250	165	0,1226	250	160/200	300/350/400
HMC2 BM 160L-6	12,8	24,2	104	160	100/130	200/250	190	0,1626	250	160/200	300/350/400
HMC2 BM 180L-6	17,4	31,5	142	250	160/200	300/350/400	261	0,2750	N/A	N/A	N/A
HMC2 BM 200L1-6	21,6	38,5	176	250	160/200	300/350/400	301	0,3450	400	250/350	490/550/630
HMC2 BM 200L2-6	25,5	44,5	210	250	160/200	300/350/400	326	0,4050	400	250/350	490/550/630
HMC2 BM 225M-6	35,0	61,5	285	400	250/350	490/550/630	383	0,6733	630	400/550	720/800/1000
HMC2 BM 250M-6	43,0	69,0	350	630	400/550	720/800/1000	523	1,2271	1000	630/800	1300/1600
HMC2 BM 280S-6	52,5	85,5	425	1000	630/800	1300/1600	633	1,5566	N/A	N/A	N/A
HMC2 BM 280M-6	64,0	104	515	1000	630/800	1300/1600	680	1,8566	N/A	N/A	N/A
HMC2 BM 280M1-6*	87,5	140	700	1000	630/800	1300/1600	941	2,9566	N/A	N/A	N/A
HMC2 BM 315S-6	87,5	144	400	1600	1000/1300	1900/2100/2500	1045	3,7900	2500	1600/2000	2800/3400
HMC2 BM 315M-6	104	172	840	1600	1000/1300	1900/2100/2500	1165	4,3900	2500	1600/200	2800/3400
HMC2 BM 315L1-6	128	210	1020	1600	1000/1300	1900/2100/2500	1255	5,4300	2500	1600/2000	2800/3400
HMC2 BM 315L2-6	154	284	1240	1600	1000/1300	1900/2100/2500	1355	6,4700	2500	1600/200	2800/3400
HMC2 BM 355M1-6	186	295	1500	2500	1600/2000	2800/3400	1815	9,8966	4000	2500	4900
HMC2 BM 355M2-6	232	360	1860	2500	1600/2000	2800/3400	2025	11,8266	4000	2500	4900
HMC2 BM 355L-6	290	445	2340	2500	1600/2000	2800/3400	2135	14,6266	4000	2500	4900

** Motors with high power/small frame*
*** On request*

8 pole

Motor type	440V 60Hz S1 - 45°C			Standard brake			Brake motor		Alternative torque brake*		
	P2	IN	Torque	Torque options			Weight	J	Torque options		
	kW	A	Nm	Nominal	Decreased	Increased	kg	kgm²	Nominal	Decreased	Increased
HMC2 BM 132S-8	2.55	6,50	29,0	63	45/54	69/75/80	78,0	0,0399	100	63/80	130/160
HMC2 BM 132M-8	3,50	8,50	39,0	100	63/80	130/160	96,0	0,0511	N/A	N/A	N/A
HMC2 BM 160M1-8	4,65	9,45	51,5	160	100/130	200/250	158	0,0876	250	160/200	300/350/400
HMC2 BM 160M2-8	6,40	12,4	70,0	160	100/130	200/250	165	0,1126	250	160/200	300/350/400
HMC2 BM 160L-8	8,75	16,8	97,0	160	100/130	200/250	185	0,1526	250	160/200	300/350/400
HMC2 BM 180L-8	12,8	26,5	140	250	160/200	300/350/400	228	0,2450	N/A	N/A	N/A
HMC2 BM 200L-8	17,4	32,0	190	250	160/200	300/350/400	292	0,3650	400	250/350	490/550/630
HMC2 BM 225S-8	21.6	38,0	234	400	250/350	490/550/630	365	0,5033	630	400/550	720/800/1000
HMC2 BM 225M-8	25,5	44,0	280	400	250/350	490/550/630	375	0,6533	630	400/550	720/800/1000
HMC2 BM 250M-8	35,0	60,0	375	630	400/550	720/800/1000	503	1,0471	1000	630/800	1300/1600
HMC2 BM 280S-8	43,0	73,5	465	1000	630/800	1300/1600	658	1,5966	N/A	N/A	N/A
HMC2 BM 280M-8	52,5	89,0	565	1000	630/800	1300/1600	730	1,9266	N/A	N/A	N/A
HMC2 BM 315S-8	64,0	106	690	1600	1000/1300	1900/2100/2500	1330	4,0700	2500	1600/2000	2800/3400
HMC2 BM 315M-8	87,5	144	940	1600	1000/1300	1900/2100/2500	1455	5,5200	2500	1600/200	2800/3400
HMC2 BM 315L1-8	104	174	1120	1600	1000/1300	1900/2100/2500	1515	6,5500	2500	1600/2000	2800/3400
HMC2 BM 315L2-8	128	212	1380	1600	1000/1300	1900/2100/2500	1555	8,2600	2500	1600/200	2800/3400
HMC2 BM 355M1-8	154	250	1640	2500	1600/2000	2800/3400	2025	10,127	4000	2500	4900
HMC2 BM 355M2-8	186	305	2000	2500	1600/2000	2800/3400	2155	11,927	4000	2500	4900
HMC2 BM 355L-8	232	380	2500	2500	1600/2000	2800/3400	2335	15,927	4000	2500	4900

** On request*

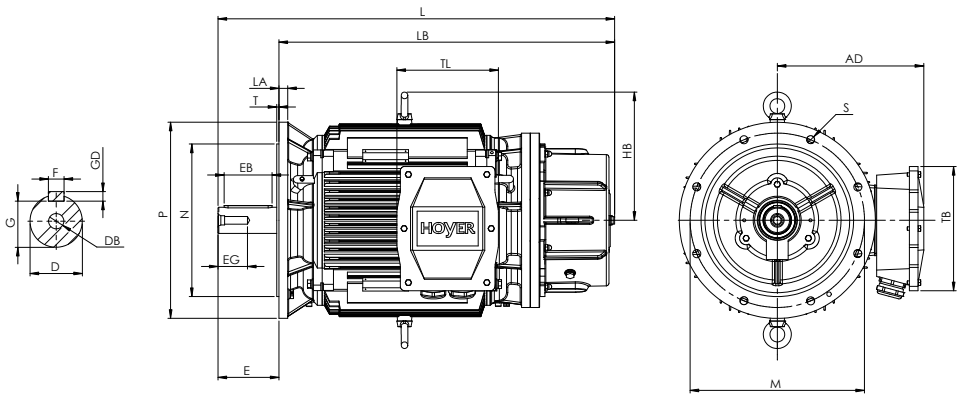

B5 TENV

						Terminal Box		Shaft								B5 Flange					
Motor type	Pole	AD	L*	LB	HB	TL	TB	D	E	F	G	GD	EB	EG	DB	M	N	P	S	T	LA
HMC2-132S	4,6,8	209	555	475	180	119	127	38	80	10	33	8	63	28	M12	265	230	300	4-Ø15	4	14
HMC2-132M	4,6,8	209	593	513	180	119	127	38	80	10	33	8	63	28	M12	265	230	300	4-Ø15	4	14
HMC2-160M	4,6,8	276	691	581	222	197	243	42	110	12	37	8	90	36	M16	300	250	350	4-Ø18,5	5	15
HMC2-160L	4,6,8	276	735	625	222	197	243	42	110	12	37	8	90	36	M16	300	250	350	4-Ø18,5	5	15
HMC2-160L1-4	4	284	821	711	230	197	243	42	110	12	37	8	90	36	M16	300	250	350	4-Ø18,5	5	15
HMC2-180M	4	292	768	658	238	197	243	48	110	14	42,5	9	90	40	M16	300	250	350	4-Ø18,5	5	15
HMC2-180L	4,6,8	292	806	696	238	197	243	48	110	14	42,5	9	90	40	M16	300	250	350	4-Ø18,5	5	15
HMC2-180L1-4	4	300	861	751	248	197	243	48	110	14	42,5	9	90	40	M16	300	250	350	4-Ø18,5	5	15
HMC2-200L	4,6,8	313	856	746	263	233	285	55	110	16	49	10	90	50	M20	350	300	400	4-Ø18,5	5	17
HMC2-200L1	4	323	940	830	272	233	285	55	110	16	49	10	90	50	M20	350	300	400	4-Ø18,5	5	17
HMC2-225S	4,6,8	336	910	770	294	233	285	60	140	18	53	11	110	56	M20	400	350	450	8-Ø18,5	5	20
HMC2-225M	4,6,8	336	935	795	294	233	285	60	140	18	53	11	110	56	M20	400	350	450	8-Ø18,5	5	20
HMC2-225M1	4,6	350	1012	872	307,5	233	285	60	140	18	53	11	110	56	M20	400	350	450	8-Ø18,5	5	20
HMC2-250M	4,6,8	374	1005	865	317,5	271	330	65	140	18	58	11	110	56	M20	500	450	550	8-Ø18,5	5	22
HMC2-250M1	4,6	390	1114	974	361,5	271	330	65	140	18	58	11	110	56	M20	500	450	550	8-Ø18,5	5	22
HMC2-280S	4,6,8	403	1087	947	372	271	330	75	140	20	67,5	12	110	56	M20	500	450	550	8-Ø18,5	5	22
HMC2-280M	4,6,8	403	1138	998	372	271	330	75	140	20	67,5	12	110	56	M20	500	450	550	8-Ø18,5	5	22
HMC2-280MB	4	419	1228	1088	416,5	271	330	75	140	20	67,5	12	110	56	M20	500	450	550	8-Ø18,5	5	22
HMC2-280M1	6	419	1228	1088	416,5	271	330	75	140	20	67,5	12	110	56	M20	500	450	550	8-Ø18,5	5	22
HMC2-315S	4	547	1292	1122	431,5	321	425	80	170	22	71	14	140	56	M20	600	550	660	8-Ø24	6	22
HMC2-315S	6,8	547	1292	1393	431,5	321	425	80	170	22	71	14	140	56	M20	600	550	660	8-Ø24	6	22
HMC2-315M	4,6,8	547	1402	1232	431,5	321	425	80	170	22	71	14	140	56	M20	600	550	660	8-Ø24	6	22
HMC2-315L	4,6,8	547	1402	1232	431,5	321	425	80	170	22	71	14	140	56	M20	600	550	660	8-Ø24	6	22
HMC2-355M	4,6,8	666	1627	1457	491,5	370	484	95	170	25	86	14	160	56	M24	740	680	800	8-Ø24	6	25
HMC2-355L	4,6,8	666	1627	1457	491,5	370	484	95	170	25	86	14	160	56	M24	740	680	800	8-Ø24	6	25

** For version with encoder motor lenght is increased by 50mm*
V3 mounting with standard housing only accepted up to frame size 250. Motors frame size 280 and up need special housing and flange

B35
TENV

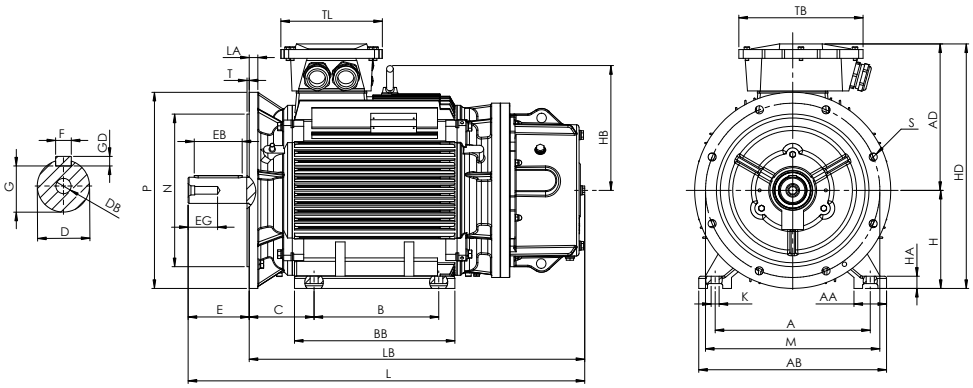

									Terminal Box		Shaft								Feet	B3						B5 Flange					
Motor type	Pole	AD	C	L*	LB	H	HB	HD	TL	TB	D	E	F	G	GD	EB	EG	DB	A	AA	AB	B	BB	HA	K	M	N	P	S	T	LA
HMC2-132S	4,6,8	209	89	755	675	132	180	341	119	127	38	80	10	33	8	63	28	M12	216	55	262	140	186	18	4-Ø12	265	230	300	4-Ø15	4	14
HMC2-132M	4,6,8	209	89	793	713	132	180	341	119	127	38	80	10	33	8	63	28	M12	216	55	262	178	224	18	4-Ø12	265	230	300	4-Ø15	4	14
HMC2-160M	4,6,8	276	108	915	805	160	222	436	197	243	42	110	12	37	8	90	36	M16	254	65	314	210	260	20	4-Ø14,5	300	250	350	4-Ø18,5	5	15
HMC2-160L	4,6,8	276	108	959	849	160	222	436	197	243	42	110	12	37	8	90	36	M16	254	65	314	254	304	20	4-Ø14,5	300	250	350	4-Ø18,5	5	15
HMC2-160L1	4	284	108	1042	932	160	230	444	197	243	42	110	12	37	8	90	36	M16	254	65	314	254	365	20	6-Ø14,5	300	250	350	4-Ø18,5	5	15
HMC2-180M	4	292	121	1011	901	180	238	472	197	243	48	110	14	42,5	9	90	40	M16	279	70	349	241	311	22	4-Ø14,5	300	250	350	4-Ø18,5	5	15
HMC2-180L	4,6,8	292	121	1049	939	180	238	472	197	243	48	110	14	42,5	9	90	40	M16	279	70	349	279	349	22	4-Ø14,5	300	250	350	4-Ø18,5	5	15
HMC2-180L1	4	300	121	1110	1000	180	248	480	197	243	48	110	14	42,5	9	90	40	M16	279	70	349	279	371	22	6-Ø14,5	300	250	350	4-Ø18,5	5	15
HMC2-200L	4,6,8	313	133	1110	1000	200	263	513	233	285	55	110	16	49	10	90	50	M20	318	70	388	305	369	25	4-Ø18,5	350	300	400	4-Ø18,5	5	17
HMC2-200L1	4	323	133	1173	1063	200	272	523	233	285	55	110	16	49	10	90	50	M20	318	70	388	305	434	25	4-Ø18,5	350	300	400	4-Ø18,5	5	17
HMC2-225S	4,8	336	149	1186	1046	225	294	561	233	285	60	140	18	53	11	110	56	M20	356	75	431	286	368	28	4-Ø18,5	400	350	450	8-Ø18,5	5	20
HMC2-225M	4,6,8	336	149	1211	1071	225	294	561	233	285	60	140	18	53	11	110	56	M20	356	75	431	311	393	28	4-Ø18,5	400	350	450	8-Ø18,5	5	20
HMC2-225M1	4,6	350	149	1285	1145	225	307,5	575	233	285	60	140	18	53	11	110	56	M20	356	75	431	311	393	28	6-Ø18,5	400	350	450	8-Ø18,5	5	20
HMC2-250M	4,6,8	374	168	1314	1174	250	317,5	624	271	330	65	140	18	58	11	110	56	M20	406	80	484	349	445	30	4-Ø24	500	450	550	8-Ø18,5	5	22
HMC2-250M1	4,6	390	168	1388	1248	250	361,5	640	271	330	65	140	18	58	11	110	56	M20	406	80	484	349	450	30	4-Ø24	500	450	550	8-Ø18,5	5	22
HMC2-280S	4,6,8	403	190	1360	1220	280	372	683	271	330	75	140	20	67,5	12	110	56	M20	457	85	542	368	485	35	4-Ø24	500	450	550	8-Ø18,5	5	22
HMC2-280M	4,6,8	403	190	1411	1271	280	372	683	271	330	75	140	20	67,5	12	110	56	M20	457	85	542	419	536	35	4-Ø24	500	450	550	8-Ø18,5	5	22
HMC2-280MB	4	419	190	1552	1412	280	416,5	699	271	330	75	140	20	67,5	12	110	56	M20	457	85	542	419	536	35	6-Ø24	500	450	550	8-Ø18,5	5	22
HMC2-280M1	6	419	190	1552	1412	280	416,5	699	271	330	75	140	20	67,5	12	110	56	M20	457	85	542	419	536	35	6-Ø24	500	450	550	8-Ø18,5	5	22
HMC2-315S	4	547	216	1563	1393	315	431,5	862	321	425	80	170	22	71	14	140	56	M20	508	120	628	406	570	45	4-Ø28	600	550	660	8-Ø24	6	22
HMC2-315S	6,8	547	216	1563	1393	315	431,5	862	321	425	80	170	22	71	14	140	56	M20	508	120	628	406	570	45	4-Ø28	600	550	660	8-Ø24	6	22
HMC2-315M	4,6,8	547	216	1673	1503	315	431,5	862	321	425	80	170	22	71	14	140	56	M20	508	120	628	457	680	45	6-Ø28	600	550	660	8-Ø24	6	22
HMC2-315L	4,6,8	547	216	1673	1503	315	431,5	862	321	425	80	170	22	71	14	140	56	M20	508	120	628	508	680	45	6-Ø28	600	550	660	8-Ø24	6	22
HMC2-355M	4,6,8	666	254	1935	1765	355	491,5	1021	370	484	95	170	25	86	14	160	56	M24	610	116	726	560	750	52	6-Ø28	740	680	800	8-Ø24	6	25
HMC2-355L	4,6,8	666	254	1935	1765	355	491,5	1021	370	484	95	170	25	86	14	160	56	M24	610	116	726	630	750	52	6-Ø28	740	680	800	8-Ø24	6	25

** For version with encoder motor lenght is increased by 50mm*

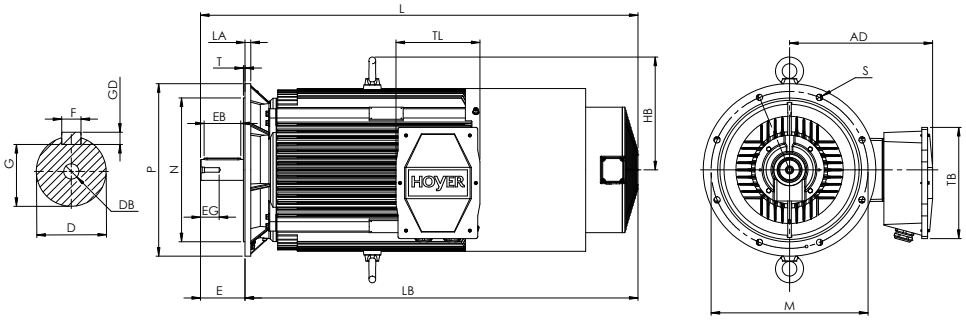

B5 TEFV

						Terminal Box		Shaft								B5 Flange					
Motor type	Pole	AD	L	LB	HB	TL	TB	D	E	F	G	GD	EB	EG	DB	M	N	P	S	T	LA
HMC2-132S	4,6,8	209	755	675	180	119	127	38	80	10	33	8	63	28	M12	265	230	300	4-Ø15	4	14
HMC2-132M	4,6,8	209	793	713	180	119	127	38	80	10	33	8	63	28	M12	265	230	300	4-Ø15	4	14
HMC2-160M	4,6,8	276	915	805	222	197	243	42	110	12	37	8	90	36	M16	300	250	350	4-Ø18,5	5	15
HMC2-160L	4,6,8	276	959	849	222	197	243	42	110	12	37	8	90	36	M16	300	250	350	4-Ø18,5	5	15
HMC2-160L1-4	4	284	1042	932	230	197	243	42	110	12	37	8	90	36	M16	300	250	350	4-Ø18,5	5	15
HMC2-180M	4	292	1011	901	238	197	243	48	110	14	42,5	9	90	40	M16	300	250	350	4-Ø18,5	5	15
HMC2-180L	4,6,8	292	1049	939	238	197	243	48	110	14	42,5	9	90	40	M16	300	250	350	4-Ø18,5	5	15
HMC2-180L1-4	4	300	1110	1000	248	197	243	48	110	14	42,5	9	90	40	M16	300	250	350	4-Ø18,5	5	15
HMC2-200L	4,6,8	313	1110	1000	263	233	285	55	110	16	49	10	90	50	M20	350	300	400	4-Ø18,5	5	17
HMC2-200L1	4	323	1173	1063	272	233	285	55	110	16	49	10	90	50	M20	350	300	400	4-Ø18,5	5	17
HMC2-225S	4,6,8	336	1186	1046	294	233	285	60	140	18	53	11	110	56	M20	400	350	450	8-Ø18,5	5	20
HMC2-225M	4,6,8	336	1211	1071	294	233	285	60	140	18	53	11	110	56	M20	400	350	450	8-Ø18,5	5	20
HMC2-225M1	4,6	350	1285	1145	307,5	233	285	60	140	18	53	11	110	56	M20	400	350	450	8-Ø18,5	5	20
HMC2-250M	4,6,8	374	1314	1174	317,5	271	330	65	140	18	58	11	110	56	M20	500	450	550	8-Ø18,5	5	22
HMC2-250M1	4,6	390	1388	1248	361,5	271	330	65	140	18	58	11	110	56	M20	500	450	550	8-Ø18,5	5	22
HMC2-280S	4,6,8	403	1360	1220	372	271	330	75	140	20	67,5	12	110	56	M20	500	450	550	8-Ø18,5	5	22
HMC2-280M	4,6,8	403	1411	1271	372	271	330	75	140	20	67,5	12	110	56	M20	500	450	550	8-Ø18,5	5	22
HMC2-280MB	4	419	1552	1412	416,5	271	330	75	140	20	67,5	12	110	56	M20	500	450	550	8-Ø18,5	5	22
HMC2-280M1	6	419	1552	1412	416,5	271	330	75	140	20	67,5	12	110	56	M20	500	450	550	8-Ø18,5	5	22
HMC2-315S	4	547	1563	1393	431,5	321	425	80	170	22	71	14	140	56	M20	600	550	660	8-Ø24	6	22
HMC2-315S	6,8	547	1563	1393	431,5	321	425	80	170	22	71	14	140	56	M20	600	550	660	8-Ø24	6	22
HMC2-315M	4,6,8	547	1673	1503	431,5	321	425	80	170	22	71	14	140	56	M20	600	550	660	8-Ø24	6	22
HMC2-315L	4,6,8	547	1673	1503	431,5	321	425	80	170	22	71	14	140	56	M20	600	550	660	8-Ø24	6	22
HMC2-355M	4,6,8	666	1935	1765	491,5	370	484	95	170	25	86	14	160	56	M24	740	680	800	8-Ø24	6	25
HMC2-355L	4,6,8	666	1935	1765	491,5	370	484	95	170	25	86	14	160	56	M24	740	680	800	8-Ø24	6	25

V3 mounting with standard housing only accepted up to frame size 250. Motors frame size 280 and up need special housing and flange

B35
TEFV

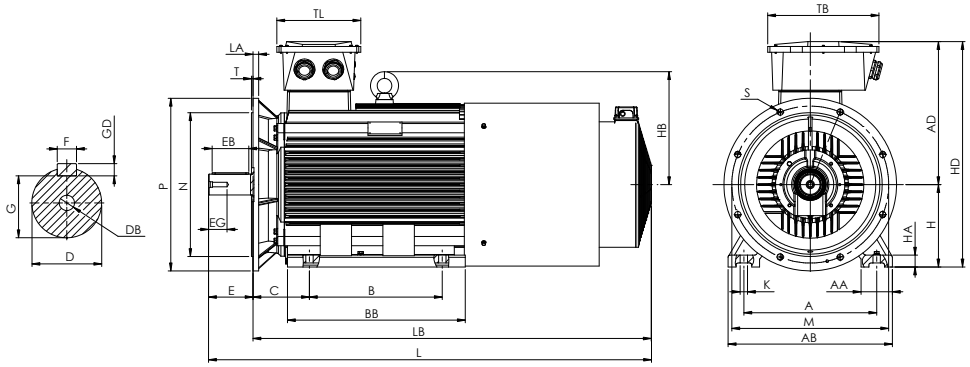

									Terminal Box		Shaft								Feet	B3						B5 Flange					
Motor type	Pole	AD	C	L	LB	H	HB	HD	TL	TB	D	E	F	G	GD	EB	EG	DB	A	AA	AB	B	BB	HA	K	M	N	P	S	T	LA
HMC2-132S	4,6,8	209	89	755	675	132	180	341	119	127	38	80	10	33	8	63	28	M12	216	55	262	140	186	18	4-Ø12	265	230	300	4-Ø15	4	14
HMC2-132M	4,6,8	209	89	793	713	132	180	341	119	127	38	80	10	33	8	63	28	M12	216	55	262	178	224	18	4-Ø12	265	230	300	4-Ø15	4	14
HMC2-160M	4,6,8	276	108	915	805	160	222	436	197	243	42	110	12	37	8	90	36	M16	254	65	314	210	260	20	4-Ø14,5	300	250	350	4-Ø18,5	5	15
HMC2-160L	4,6,8	276	108	959	849	160	222	436	197	243	42	110	12	37	8	90	36	M16	254	65	314	254	304	20	4-Ø14,5	300	250	350	4-Ø18,5	5	15
HMC2-160L1	4	284	108	1042	932	160	230	444	197	243	42	110	12	37	8	90	36	M16	254	65	314	254	365	20	6-Ø14,5	300	250	350	4-Ø18,5	5	15
HMC2-180M	4	292	121	1011	901	180	238	472	197	243	48	110	14	42,5	9	90	40	M16	279	70	349	241	311	22	4-Ø14,5	300	250	350	4-Ø18,5	5	15
HMC2-180L	4,6,8	292	121	1049	939	180	238	472	197	243	48	110	14	42,5	9	90	40	M16	279	70	349	279	349	22	4-Ø14,5	300	250	350	4-Ø18,5	5	15
HMC2-180L1	4	300	121	1110	1000	180	248	480	197	243	48	110	14	42,5	9	90	40	M16	279	70	349	279	371	22	6-Ø14,5	300	250	350	4-Ø18,5	5	15
HMC2-200L	4,6,8	313	133	1110	1000	200	263	513	233	285	55	110	16	49	10	90	50	M20	318	70	388	305	369	25	4-Ø18,5	350	300	400	4-Ø18,5	5	17
HMC2-200L1	4	323	133	1173	1063	200	272	523	233	285	55	110	16	49	10	90	50	M20	318	70	388	305	434	25	4-Ø18,5	350	300	400	4-Ø18,5	5	17
HMC2-225S	4,8	336	149	1186	1046	225	294	561	233	285	60	140	18	53	11	110	56	M20	356	75	431	286	368	28	4-Ø18,5	400	350	450	8-Ø18,5	5	20
HMC2-225M	4,6,8	336	149	1211	1071	225	294	561	233	285	60	140	18	53	11	110	56	M20	356	75	431	311	393	28	4-Ø18,5	400	350	450	8-Ø18,5	5	20
HMC2-225M1	4,6	350	149	1285	1145	225	307,5	575	233	285	60	140	18	53	11	110	56	M20	356	75	431	311	393	28	6-Ø18,5	400	350	450	8-Ø18,5	5	20
HMC2-250M	4,6,8	374	168	1314	1174	250	317,5	624	271	330	65	140	18	58	11	110	56	M20	406	80	484	349	445	30	4-Ø24	500	450	550	8-Ø18,5	5	22
HMC2-250M1	4,6	390	168	1388	1248	250	361,5	640	271	330	65	140	18	58	11	110	56	M20	406	80	484	349	450	30	4-Ø24	500	450	550	8-Ø18,5	5	22
HMC2-280S	4,6,8	403	190	1360	1220	280	372	683	271	330	75	140	20	67,5	12	110	56	M20	457	85	542	368	485	35	4-Ø24	500	450	550	8-Ø18,5	5	22
HMC2-280M	4,6,8	403	190	1411	1271	280	372	683	271	330	75	140	20	67,5	12	110	56	M20	457	85	542	419	536	35	4-Ø24	500	450	550	8-Ø18,5	5	22
HMC2-280MB	4	419	190	1552	1412	280	416,5	699	271	330	75	140	20	67,5	12	110	56	M20	457	85	542	419	536	35	6-Ø24	500	450	550	8-Ø18,5	5	22
HMC2-280M1	6	419	190	1552	1412	280	416,5	699	271	330	75	140	20	67,5	12	110	56	M20	457	85	542	419	536	35	6-Ø24	500	450	550	8-Ø18,5	5	22
HMC2-315S	4	547	216	1563	1393	315	431,5	862	321	425	80	170	22	71	14	140	56	M20	508	120	628	406	570	45	4-Ø28	600	550	660	8-Ø24	6	22
HMC2-315S	6,8	547	216	1563	1393	315	431,5	862	321	425	80	170	22	71	14	140	56	M20	508	120	628	406	570	45	4-Ø28	600	550	660	8-Ø24	6	22
HMC2-315M	4,6,8	547	216	1673	1503	315	431,5	862	321	425	80	170	22	71	14	140	56	M20	508	120	628	457	680	45	6-Ø28	600	550	660	8-Ø24	6	22
HMC2-315L	4,6,8	547	216	1673	1503	315	431,5	862	321	425	80	170	22	71	14	140	56	M20	508	120	628	508	680	45	6-Ø28	600	550	660	8-Ø24	6	22
HMC2-355M	4,6,8	666	254	1935	1765	355	491,5	1021	370	484	95	170	25	86	14	160	56	M24	610	116	726	560	750	52	6-Ø28	740	680	800	8-Ø24	6	25
HMC2-355L	4,6,8	666	254	1935	1765	355	491,5	1021	370	484	95	170	25	86	14	160	56	M24	610	116	726	630	750	52	6-Ø28	740	680	800	8-Ø24	6	25

Bearings and Cable Glands

Bearings

	Drive end		None drive end	
Motor type	2 pole	4,6,8 pole	2 pole	4,6,8 pole
HMC2 132	6308-ZZ/C3		6308-ZZ/C3	
HMC2 160	6309-ZZ/C3		6309-ZZ/C3	
HMC2 180	6311-ZZ/C3		6311-ZZ/C3	
HMC2 200	6312-ZZ/C3		6312-ZZ/C3	
HMC2 200L1*	6312-ZZ/C3		6312-ZZ/C3	
HMC2 225	6313-ZZ/C3		6312-ZZ/C3	
HMC2 225M1*	6314-ZZ/C3		6313-ZZ/C3	
HMC2 250	6314-ZZ/C3		6313-ZZ/C3	
HMC2 250M1*	6315-ZZ/C3		6314-ZZ/C3	
HMC2 280	6317-ZZ/C3		6314-ZZ/C3	
HMC2 280MB*	6317-ZZ/C3		6317-ZZ/C3	
HMC2 315	6319-ZZ/C3		6319-ZZ/C3	
HMC2 315L3	6319-ZZ/C3		6319-ZZ/C3	
HMC2 355	6322-ZZ/C3		6322-ZZ/C3	

**Motors with high power / small frame*

Cable glands

Motor type	Cable glands	Blind caps
HMC2 132	2 x M25x1,5	1 x M20x1,5
HMC2 160	2 x M40x1,5	2 x M20x1,5
HMC2 180	2 x M40x1,5	2 x M20x1,5
HMC2 200	2 x M50x1,5	2 x M20x1,5
HMC2 225	2 x M50x1,5	2 x M20x1,5
HMC2 250	2 x M63x1,5	2 x M20x1,5
HMC2 280	2 x M63x1,5	2 x M20x1,5
HMC2 315	2 x M63x1,5	2 x M20x1,5
HMC2-355	2 x M72x2,0	2 x M20x1,5

Rating table amb. temp.

Amb. temp.	30°C	35°C	40°C	45°C	50°C	55°C	60°C
P/P_N	1,05	1,02	1,00	0,97	0,93	0,87	0,82

Rating plate motor

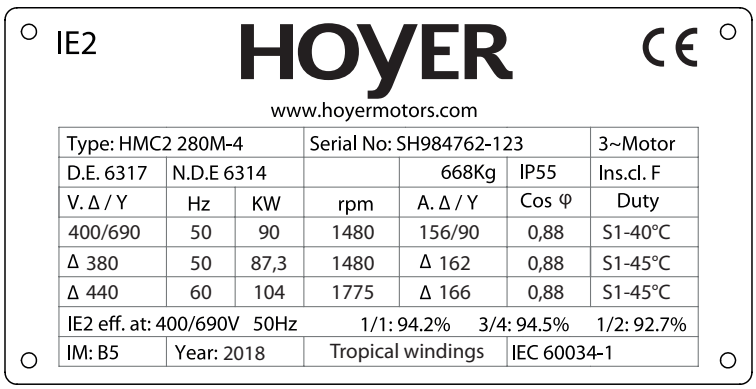

Rating plate brake

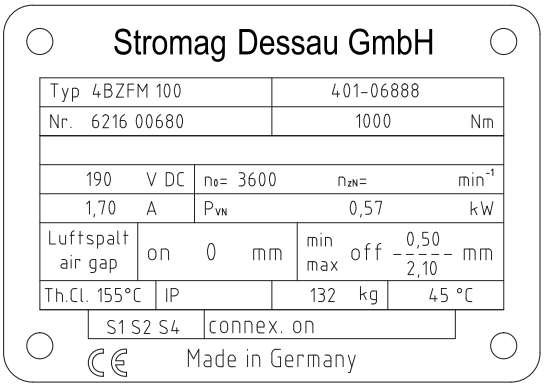

HOYER

EXCEEDING EXPECTATIONS

Hoyer Motors, Marine Brake Motors, February 2020

Head Offices
Denmark
Over Hadstenvej 42 · DK-8370 Hadsten
T +45 86 98 22 55 · F +45 86 98 17 79
hoyermotors@hoyermotors.com
hoyermotors.com

China
19 Jingwu Middle Road · Beilun District
Ningbo 315821 · Zhejiang
T +86 21 8036 4698 · F +86 574 2628 1573
hoyermotors@hoyermotors.cn
hoyermotors.cn

Branch Offices
Germany
Landsberger Straße 155 · 80687 München
T +49 89 700 88 235 · F +49 89 543 56 333
germany@hoyermotors.com
hoyermotors.com

Sweden
Liljeholmsstranden 5 · PO box 44017
SE-100 73 Stockholm
T +46 8 446 877 13 · F + 46 8 446 877 20
sweden@hoyermotors.com
hoyermotors.com

Norge
Torvet 1 · 3256 Larvik
T. +47 33 18 00 11
norway@hoyermotors.com

Poland
Stanisława Konarskiego 11 · 33-100 Tarnów
Tlf.: +48 668 924 448

Benelux
Vasteland 78 · 3011 BN, Rotterdam
T +31 10 420 35 20 · F +31 10 420 44 51
benelux@hoyermotors.com
hoyermotors.com

Korea
302ho · Code square, 3150-1
Daejeo 2-dong · Gangseo-gu · Busan
T +82 51 944 1268 · F +82 51 996 0252
korea@hoyermotors.com
hoyermotors.com

Japan
Mizunobu Bldg 7F, 1-11-1, Kitasaiwai
Nishi-ku Yokohama
T. +81 35 571 1517
japan@hoyermotors.com
hoyermotors.com

Important notice. Text and data in this catalogue are not binding and we reserve the right to implement changes without further notice.